49V-026

INDEX OF SHEETS	
SHEET NO.	DESCRIPTION
1	Title Sheet
1A	Index of Sheets Cont'd.

STATE OF OREGON

DEPARTMENT OF TRANSPORTATION

PLANS FOR PROPOSED PROJECT

GRADING, DRAINAGE, PAVING, SIGNING & ROADSIDE DEVELOPMENT

17TH AVE TRAIL: SE OCHOCO - SE MCLOUGHLIN

CITY OF MILWAUKIE
CLACKAMAS COUNTY
FEBRUARY 2016

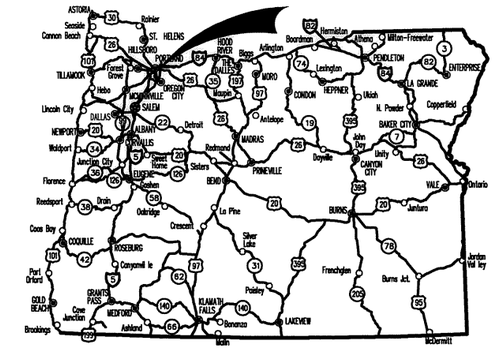

Overall Length Of Project - 0.94 Miles

ATTENTION:
Oregon Law Requires You To Follow Rules Adopted By The Oregon Utility Notification Center. Those Rules Are Set Forth In OAR 952-001-0010 Through OAR 952-001-0090. You May Obtain Copies Of The Rules By Calling The Center. (Note: The Telephone Number For The Oregon Utility Center Is (503) 232-1987.)

LET'S ALL WORK TOGETHER TO MAKE THIS JOB SAFE

END OF PROJECT
STP-4865(018)
"B" STA 149+65.80

BEGINNING OF PROJECT
STP-4865(018)
"B" STA 100+00.00

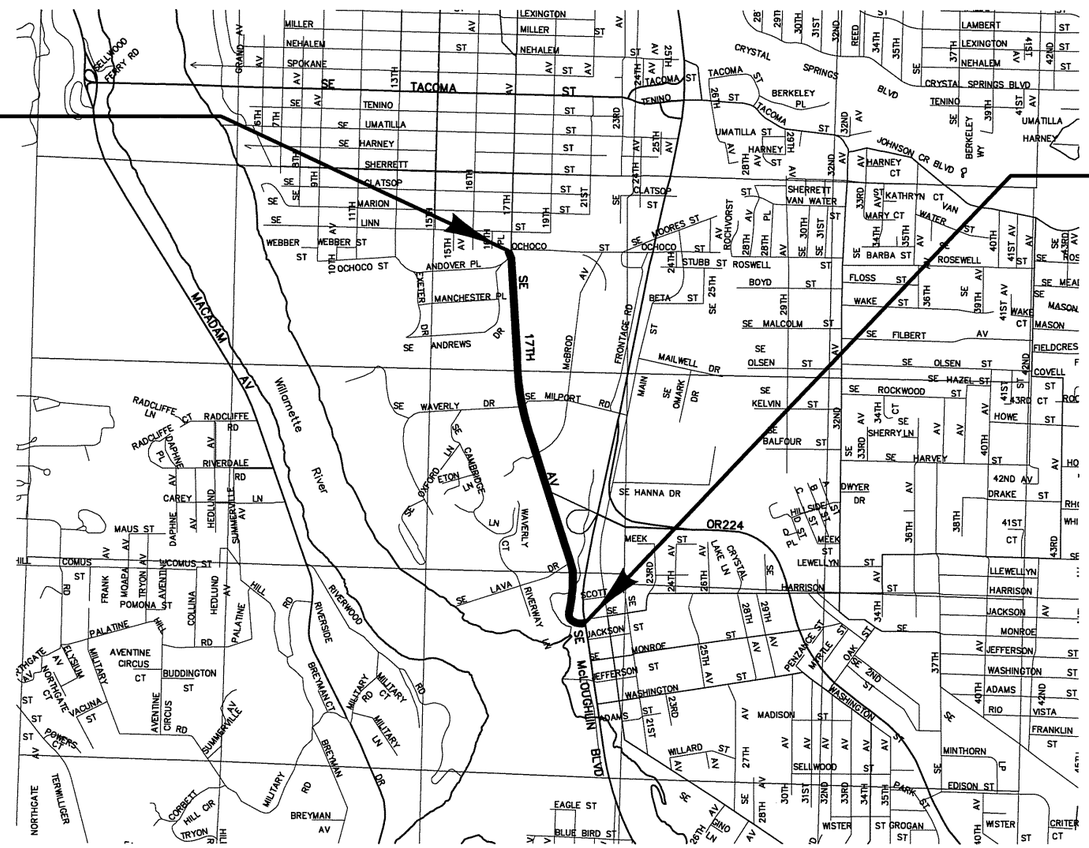

VICINITY MAP
SCALE: 1" = 2000'

T. 1S, R. 1E, S. 26

Harper Houf Peterson Righellis Inc.
ENGINEERS • PLANNERS • LANDSCAPE ARCHITECTS • SURVEYORS
205 SE Spokane Street, Suite 200 Portland, OR 97202 phone: 503.221.1131 www.hhpr.com fax: 503.221.1171

OREGON TRANSPORTATION COMMISSION

Tammy Baney	CHAIR
David Lohman	COMMISSIONER
Susan Morgan	COMMISSIONER
Alando Simpson	COMMISSIONER
Sean O'Hollaren	COMMISSIONER
Matthew L. Garrett	DIRECTOR OF TRANSPORTATION

These plans were developed using AASHTO design standards. Exceptions to these standards, if any, have been submitted and approved by the ODOT Chief Engineer or their delegated authority.

Approving Authority: 1/13/2016
Signature & date
Aaron Isenhart, Project Manager
Print name and title
Concurrence by ODOT Chief Engineer

17TH AVE TRAIL: SE OCHOCO - SE MCLOUGHLIN
CITY OF MILWAUKIE
CLACKAMAS COUNTY

FEDERAL HIGHWAY ADMINISTRATION	PROJECT NUMBER	SHEET NO.
OREGON DIVISION	STP-4865(018)	1

\\Hhpr-svr-04\projects\MWK (City of Milwaukie)\MWK-24 (17TH Ave Trail)\MWK24-DWGS\SHEETS\ MWK24-1.dwg

P:\MWK (City of Milwaukie)\MWK-24 (17TH Ave Trail)\MWK24-DWGS\SHEETS\ MWK24-1A.dwg

INDEX OF SHEETS, CONT'D

SHEET NO.	DESCRIPTION
1A	Sheet Index
1A-2	Standard Drawing Numbers
1A-3	Survey Notes & Legend
1B	Sheet Layout
2 TO 2A-4	Typical Sections
2B TO 2B-10	Details
2C TO 2C-3	Traffic Control Details
2C-4	Detour Plan
2C-5 TO 2C-9	Traffic Control Details
2C-10	Detour Plan
2D	Pipe Data Sheet
2E TO 2E-7	Curb Return Details
2F TO 2F-6	Sidewalk and Driveway Details
3	Alignment and Right of Way Plan
3A	General Construction
3B	Drainage & Utilities
4	Alignment and Right of Way Plan
4A	General Construction
4B	Drainage & Utilities
5	Alignment and Right of Way Plan
5A	General Construction
5B TO 5B-2	Drainage & Utilities
6	Alignment and Right of Way Plan
6A	General Construction
6B	Drainage & Utilities
7	Alignment and Right of Way Plan
7A	General Construction
7B	Drainage & Utilities
8	Alignment and Right of Way Plan
8A	General Construction
8B TO 8B-2	Drainage & Utilities
9	Alignment and Right of Way Plan
9A TO 9A-2	General Construction
9B TO 9B-2	Drainage & Utilities
10	Alignment and Right of Way Plan
10A	General Construction
10B	Drainage & Utilities
11	Alignment and Right of Way Plan
11A	General Construction
11B	Drainage & Utilities
12	Alignment and Right of Way Plan
12A	General Construction
12B	Drainage & Utilities
13	Alignment and Right of Way Plan
13A	General Construction
13B	Drainage & Utilities
GEO/HYDRO	
GA	Erosion and Sediment Control Cover Sheet
GA-2 TO GA-3	Erosion Control Details
GA-4 TO GA-14	Erosion Control
GB TO GB-3	Geotechnical Data
GC TO GC-2	Retaining Walls
GC-3	Retaining Wall Details
GL TO GL-7	Contaminated Soil
GN	Bid Item Log and Seeding Schedule
GN-2 TO GN-12	Planting Plan

INDEX OF SHEETS, CONT'D

SHEET NO.	DESCRIPTION
STRUCTURE NO 17175 (17TH AVE MSE WALL)	
96673	Plan
96674	Details
BRIDGE NO 01137B (JOHNSON CREEK)	
96675	Plan
96676	Details
PAVEMENT MARKINGS	
ST	Pavement Marking Legend
ST-2 TO ST-12	Pavement Marking Plan

SHEET NO. ODOT	SHEET NO. PLANS	DESCRIPTION
PERMANENT SIGNING		
	S-00001 TO S-00003	Permanent Signing
S-15695 TO S-15696	S-00004 TO S-00005	Permanent Signing
	S-00006 TO S-00013	Permanent Signing
S-15697 TO S-15702	S-00014 TO S-00019	Permanent Signing
	S-00020	Permanent Signing
TRAFFIC SIGNALS		
18626	00001	Signal Legend
18627	00002	Detection Modification Plan
18628	00003	Signal Removal Plan
18629	00004	Signal Modification Plan
18630	00005	Detection Modification Plan
18631	00006	Pole Entrance Chart
18632	00007	Existing Utility Plan
18633	00008	Interconnect Plan
18634	00009	Interconnect Details
	00010	Signal Removal Plan
	00011	Signal Plan
	00012	Detector Plan
	00013	Pole Entrance Chart
	00014	Existing Utility Plan
18635	00015	Signal Details
18636	00016	Signal Details
	00017	Signal Details

Harper Houf Peterson Righellis Inc.
ENGINEERS • PLANNERS • LANDSCAPE ARCHITECTS • SURVEYORS
205 SE Spokane Street, Suite 200 Portland, OR 97202 phone: 503.221.1131 www.hhpr.com fax: 503.221.1171

17TH AVE TRAIL: SE OCHOCO - SE MCLOUGHLIN
CITY OF MILWAUKIE
CLACKAMAS COUNTY

FEDERAL HIGHWAY ADMINISTRATION	PROJECT NUMBER	SHEET NO.
OREGON DIVISION	STP-4865(018)	1A

49V-026

STANDARD DRG. NOS.

RD100	- Mailbox Supports
RD101	- Mailbox Installation
RD300	- Trench Backfill, Bedding, Pipe Zone and Multiple Installations
RD302	- Street Cut
RD306	- Concrete Encasement, Cradle, and Cap Details
RD335	- Standard Storm Sewer Manhole
RD336	- Standard Manhole Details
RD337	- Manhole Safety Ladder
RD339	- Pipe to Structure Connection
RD344	- Standard Manhole Base Section
RD345	- Pipe to Manhole Connection
RD356	- Manhole Cover and Frames
RD360	- Manhole Frame Adjustment
RD363	- Gutter Transition
RD364	- Concrete Inlets Type G-1, G-2, G-2M & G-2MA
RD365	- Frames & Grates for Concrete Inlets
RD371	- Concrete Inlet Base Type CG-3
RD372	- Concrete Inlet Top, Option 1 Type CG-3
RD376	- Miscellaneous Drainage Structures Siphon Box, Inlet Cap & Inlet Adjustment
RD386	- Fill Height Table for Circular Concrete Pipe
RD388	- Fill Height Tables For PVC Pipe
RD393	- Fill Height Tables for Polypropylene Pipe
RD400	- Guardrail and Metal Median Barrier
RD405	- Guardrail and Metal Median Barrier Parts
RD415	- Guardrail and Metal Median Barrier Parts
RD420	- Energy Absorbing Terminal
RD700	- Curbs
RD705	- Islands
RD706	- Traffic Separators and Transitions
RD710	- Accessible Route Islands
RD715	- Approaches and Non-Sidewalk Driveways
RD720	- Sidewalks
RD740	- Separated Sidewalk Driveways or Alleys (Options H, I and J) Local Jurisdictions
RD755	- Sidewalk Ramp Details
RD757	- Sidewalk Ramp Placement Options Curb Radii > 15'
RD759	- Truncated Dome Detectable Warning Surface Details & Locations
RD815	- Chain Link Fence
RD1005	- Check Dams (Type 1, 3 and 4)
RD1006	- Check Dams (Type 2 and 6)
RD1010	- Inlet Protection (Type 2, 3, 6 and 7)
RD1032	- Sediment Barrier (Type 8)

TM200	- Sign Installation Details
TM201	- Miscellaneous Sign Placement Details
TM212	- Signing Details Oregon Route Signs
TM223	- Conventional Roads Direction Sign Layout Street Name Signs
TM230	- Mounting Details for Removable Legend (4" Through 8" Letters/Numbers)
TM233	- Mounting Details for Removable Legend (Various Arrow Sizes)
TM450	- Mast Arm Pole Details
TM452	- Strain Pole Details
TM457	- Vehicle, Pedestrian Signal and Pushbutton Mounting Option Details
TM458	- Pedestrian Ramp Placement Details
TM460	- Vehicle Signal Details
TM462	- Adjustable Signal Head Mounting Details
TM463	- Spanwire Mounting Details
TM465	- Overhead Sign, Fire Preemption and Photoelectric Control Details
TM467	- Pedestrian Signal and Pedestrian Push Button Details
TM470	- Color Code Charts
TM472	- Traffic Signal Junction Boxes/Hand Holes
TM475	- Loop Details
TM480	- Loop Entrance Details
TM482	- Controller Cabinet and Foundation Details
TM485	- Service Cabinets and Service Cabinet Wiring Details
TM500	- Pavement Marking Standard Detail Blocks
TM501	- Pavement Marking Standard Detail Blocks
TM503	- Pavement Marking Standard Detail Blocks
TM505	- Rail Crossing Pavement Markings
TM520	- Durable Pavement Markings Method 'A' Extruded Surface Installed Profiled
TM530	- Intersection Pavement Markings (Crosswalk, Stop Bars & Bike Lane Stencil)
TM531	- Turn Arrow Marking Details
TM539	- Traversable Median Details
TM560	- Alignment Layout: General
TM561	- Alignment Layout: Left Turn Lane, Centerline & Medians
TM602	- Triangular Base Breakaway Sign Support (Multi-Directional Slip Base Design)
TM635	- Breakaway Sign and Luminaire Supports (Location Guidelines)
TM650	- Traffic Signal Supports General Details & Design Criteria
TM651	- Traffic Signal Supports Notes and Reactions
TM652	- Traffic Signal Supports Steel Details
TM653	- Traffic Signal Supports Foundation Requirements
TM660	- Traffic Strain Pole Supports General Details & Design Criteria
TM661	- Traffic Strain Pole Supports Notes, Reactions, and Details
TM671	- 3 Second Wind Gust Speed Map
TM675	- Extruded Aluminum Panels
TM676	- Sign Attachments
TM677	- Sign Mounts
TM678	- Secondary Sign Mounting Details
TM679	- Signal Mast Arm Street Name Sign Mounts
TM680	- Signal Pole Mounts
TM681	- Perforated Steel Square Tube (PSST) Sign Support Installation
TM687	- Perforated Steel Square Tube (PSST) Anchor Foundation
TM688	- Perforated Steel Square Tube (PSST) Slip Base Foundation
TM800	- Tables, Abrupt Edge and PCMS Details
TM820	- Temporary Barricades
TM821	- Temporary Sign Supports
TM840	- Closure Details
TM841	- Intersection Work Zone Details
TM842	- Signalized Intersection Details
TM843	- Multi-Lane Signalized Intersection Details
TM844	- Temporary Pedestrian Access Routing
TM850	- 2-Lane, 2-Way Roadways

Harper Houf Peterson Righellis Inc.
ENGINEERS • PLANNERS • LANDSCAPE ARCHITECTS • SURVEYORS
205 SE Spokane Street, Suite 200 Portland, OR 97202 phone: 503.221.1131 www.hhpr.com fax: 503.221.1171

17TH AVE TRAIL: SE OCHOCO - SE MCLOUGHLIN
CITY OF MILWAUKIE
CLACKAMAS COUNTY

FEDERAL HIGHWAY ADMINISTRATION	PROJECT NUMBER	SHEET NO.
OREGON DIVISION	STP-4865(018)	1A-2

P:\MWK (City of Milwaukie)\MWK-24 (17TH Ave Trail)\MWK24-DWGS\SHEETS\ MWK24-1A.dwg

SURVEY MONUMENTATION:

SURVEY MONUMENTS ARE SUBJECT TO ORS 209.155 AND 209.250. AS A REQUIREMENT OF THE CONSTRUCTION OF THIS PROJECT, SHOULD IT BE DETERMINED THAT A SURVEY MONUMENT BE REQUIRED TO BE REMOVED, DISTURBED OR DESTROYED DURING THE CONSTRUCTION OF THIS PROJECT THE PERSON OR PERSONS RESPONSIBLE FOR THE CONSTRUCTION SHALL ENGAGE THE SERVICES OF A REGISTERED PROFESSIONAL LAND SURVEYOR TO SATISFY THE REQUIREMENTS OF THE OREGON REVISED STATUTES.

SURVEY UTILITY NOTE:

THE UNDERGROUND UTILITIES SHOWN HAVE BEEN LOCATED FROM LOCATE PAINT MARKINGS TIED IN THE FIELD SURVEY AND AS-BUILT DRAWINGS PROVIDED BY UTILITY COMPANIES. THIS SURVEY DOES NOT SHOW ANY PAINT MARKINGS PROVIDED AFTER THE FIELD SURVEY WAS COMPLETED. AS-BUILT DRAWING INFORMATION THAT WAS NOT PROVIDED IS NOT REFLECTED ON THIS SURVEY. THIS SURVEY MAKES NO GUARANTEES THAT THE UNDERGROUND UTILITIES SHOWN COMPRISE OF ALL SUCH UTILITIES IN THE AREA. THE UNDERGROUND UTILITIES SHOWN MAY NOT BE IN THE EXACT LOCATION AS NOTED ON THIS SURVEY, BUT ARE LOCATED AS ACCURATELY AS POSSIBLE FROM THE INFORMATION PROVIDED. MANHOLES OTHER THAN SANITARY AND STORM SEWER WERE IDENTIFIED BY MANHOLE LIDS AND MAY NOT BE LABELED CORRECTLY.

UTILITY LOCATIONS SHOULD BE VERIFIED BY OREGON UTILITIES NOTIFICATION CENTER IMMEDIATELY PRIOR TO ANY EXCAVATION.

OREGON UTILITIES NOTIFICATION CENTER WAS NOTIFIED ON APRIL 21, 2014, TICKET NUMBER 14085458 AND 14085831. THE FOLLOWING LIST OF UTILITY COMPANIES SERVICING THE AREA WERE PROVIDED:

CENTURYLINK
CLACKAMAS COUNTY D.O.T.
COMCAST CABLE COMMUNICATIONS
CITY OF MILWAUKIE
NW NATURAL
ODOT ELECTRICAL
PORTLAND GENERAL ELECTRIC
CITY OF PORTLAND
QLN – QWEST LOCAL NETWORK

* – DENOTES AS-BUILT DRAWINGS RECEIVED

SURVEY COMPLETED JUNE 24, 2014 BY HARPER HOUF PETERSON RIGHELLIS INC.
SUPPLEMENTAL SURVEY DATA COMPLETED SEPTEMBER 22, 2014 BY HARPER HOUF PETERSON RIGHELLIS INC.

LEGEND

Existing:

- Concrete
- Rip-Rap
- SAN — Sanitary Sewer Line
- STM — Stormwater Line
- W — Water Line
- E — Electric Line
- FO — Fiber Optic Line
- G — Gas Line
- OW — Overhead Electric Line
- T — Telephone Line
- TV — Television Line
- Curb
- Edge of Pavement
- R/W
- Property Line
- Easement Line
- X — Fence
- 400 — Major Contour
- 401 — Minor Contour
- Utility Pole
- Guy Wire
- Structure
- Sign
- GAS — Gas Valve
- IRR — Irrigation Valve
- WAT — Water Valve
- Irrigation Pull Box
- CO — Cleanout
- CO IRR — Irrigation Cleanout
- SS — Sanitary Sewer Manhole
- Catch Basin
- CTV — Cable Television Riser
- TEL — Telephone Riser
- Street Light
- GP — Gate Post
- Deciduous Tree
- Traffic Signal
- S — Signal Pull Box
- SD — Storm Sewer Manhole

Proposed:

- Porous Asphalt Path or HMAC Pavement Section
- Curb
- Truncated Domes
- Aggregate Base
- New Sidewalk / Dwy. Hatch
- New Conc. Path Hatch
- Vegetated Planter Strip
- Area Drain
- Catch Basin
- Sign
- Sawcut
- Proposed EOP
- Proposed R/W
- Proposed Temporary Construction Easement

HHPR Harper Houf Peterson Righellis Inc.
ENGINEERS • PLANNERS • LANDSCAPE ARCHITECTS • SURVEYORS
205 SE Spokane Street, Suite 200 Portland, OR 97202 phone: 503.221.1131 www.hhpr.com fax: 503.221.1171

17TH AVE TRAIL: SE OCHOCO - SE MCLOUGHLIN
CITY OF MILWAUKIE
CLACKAMAS COUNTY

FEDERAL HIGHWAY ADMINISTRATION	PROJECT NUMBER	SHEET NO.
OREGON DIVISION	STP-4865(018)	1A-3

P:\MWK (City of Milwaukie)\MWK-24 (17TH Ave Trail)\MWK24-DWGS\SHEETS\ MWK24-1A.dwg

49V-026

SHEET LAYOUT

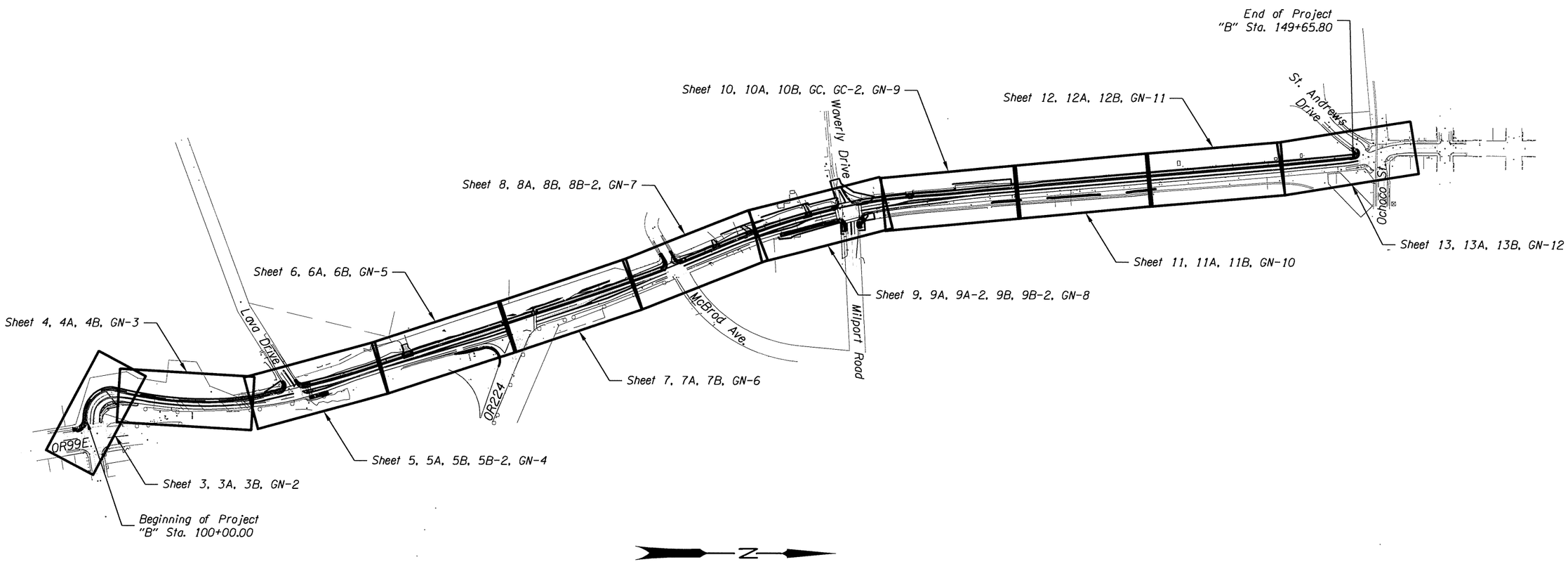

Harper Houf Peterson Righellis Inc.
ENGINEERS • PLANNERS • LANDSCAPE ARCHITECTS • SURVEYORS
205 SE Spokane Street, Suite 200 Portland, OR 97202 phone: 503.221.1131 www.hhpr.com fax: 503.221.1171

17TH AVE TRAIL: SE OCHOCO - SE MCLOUGHLIN
CITY OF MILWAUKIE
CLACKAMAS COUNTY

FEDERAL HIGHWAY ADMINISTRATION	PROJECT NUMBER	SHEET NO.
OREGON DIVISION	STP-4865(018)	1B

P:\MWK (City of Milwaukie)\MWK-24 (17TH Ave Trail)\MWK24-DWGS\SHEETS\ MWK24-1B.dwg

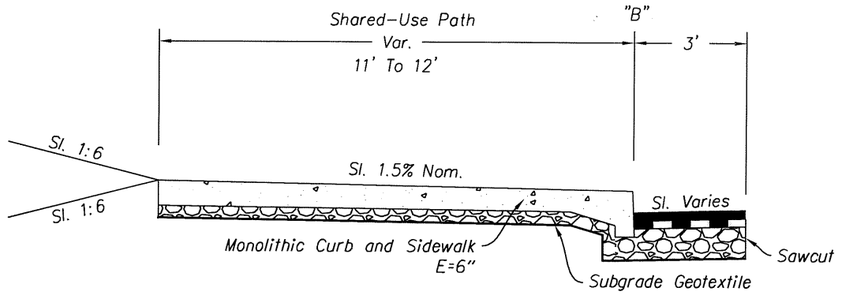

STA. "B" 106+64.97 To STA. "B" 107+89.43

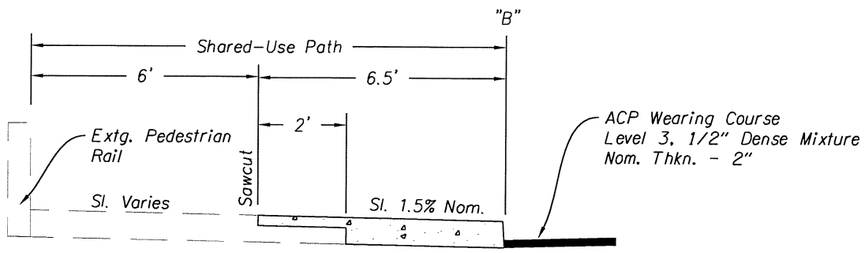

STA. "B" 103+98.51 To STA. "B" 106+64.97
(BRIDGE SECTION)

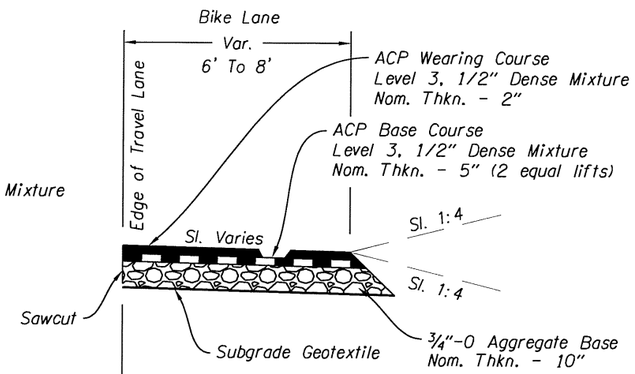

STA. "B" 100+00.00 To STA. "B" 102+28.52

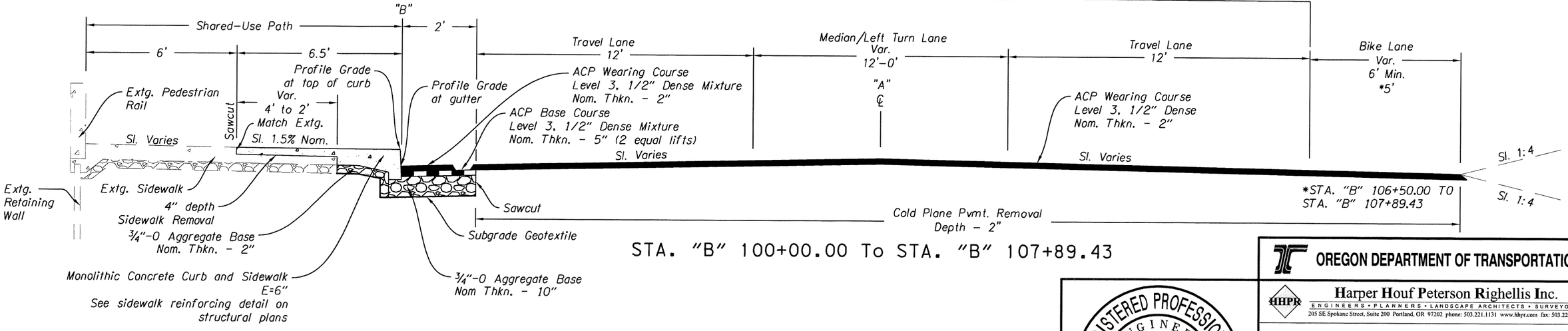

STA. "B" 100+00.00 To STA. "B" 107+89.43

Note: Slopes are labeled V:H

REGISTERED PROFESSIONAL ENGINEER
69245
OREGON
JULY 09, 2002
AARON J. ISENHART
EXPIRES: 06/30/2017

OREGON DEPARTMENT OF TRANSPORTATION

Harper Houf Peterson Righellis Inc.
ENGINEERS • PLANNERS • LANDSCAPE ARCHITECTS • SURVEYORS
205 SE Spokane Street, Suite 200 Portland, OR 97202 phone: 503.221.1131 www.hhpr.com fax: 503.221.1171

17TH AVE TRAIL: SE OCHOCO - SE MCLOUGHLIN
CITY OF MILWAUKIE
CLACKAMAS COUNTY

REVIEWED BY AJI
DESIGNED BY KJO
DRAFTED BY KJO

TYPICAL SECTIONS

SHEET NO. 2

P:\MWK (City of Milwaukie)\MWK-24 (17TH Ave Trail)\MWK24-DWGS\SHEETS\ MWK24-2A.dwg

49V-026

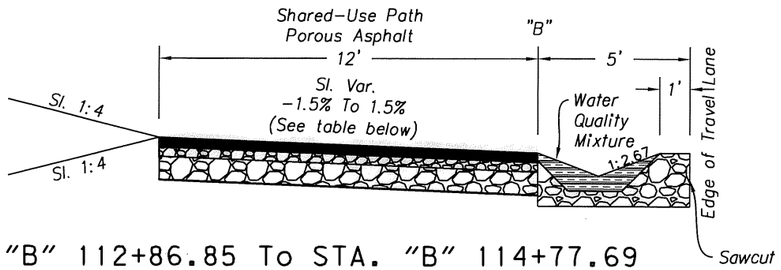

STA. "B" 112+86.85 To STA. "B" 114+77.69

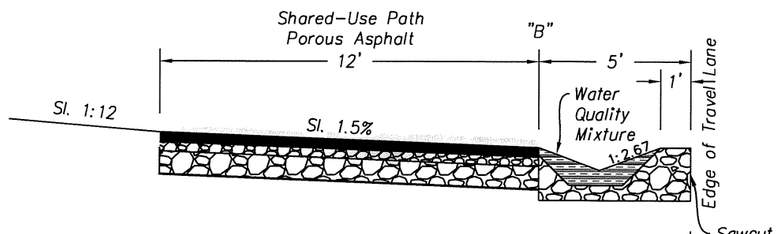

STA. "B" 109+42.00 To STA. "B" 112+86.85

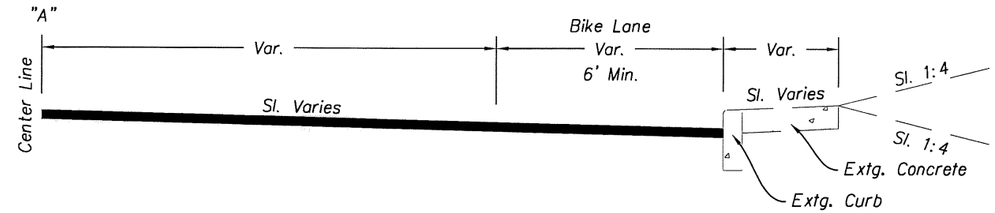

STA. "B" 112+69.13 To STA. "B" 114+77.69

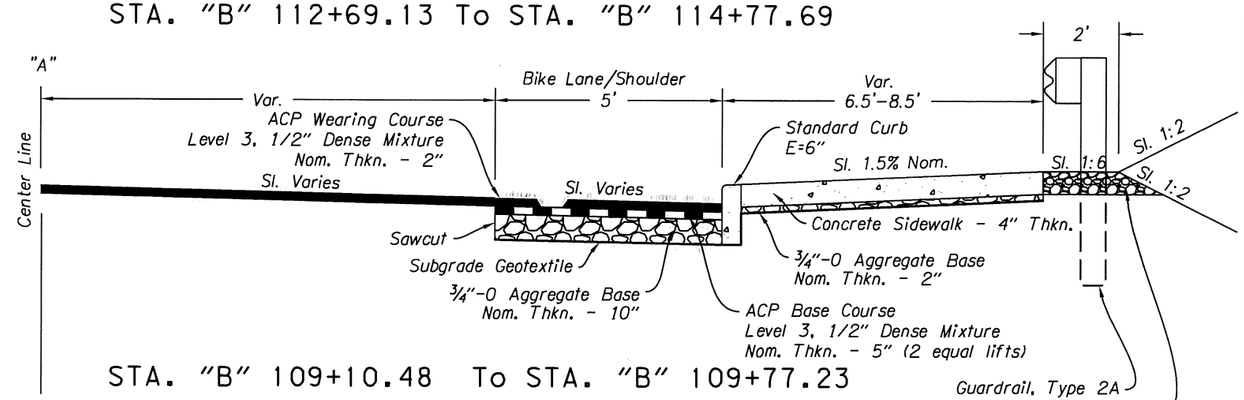

STA. "B" 109+10.48 To STA. "B" 109+77.23

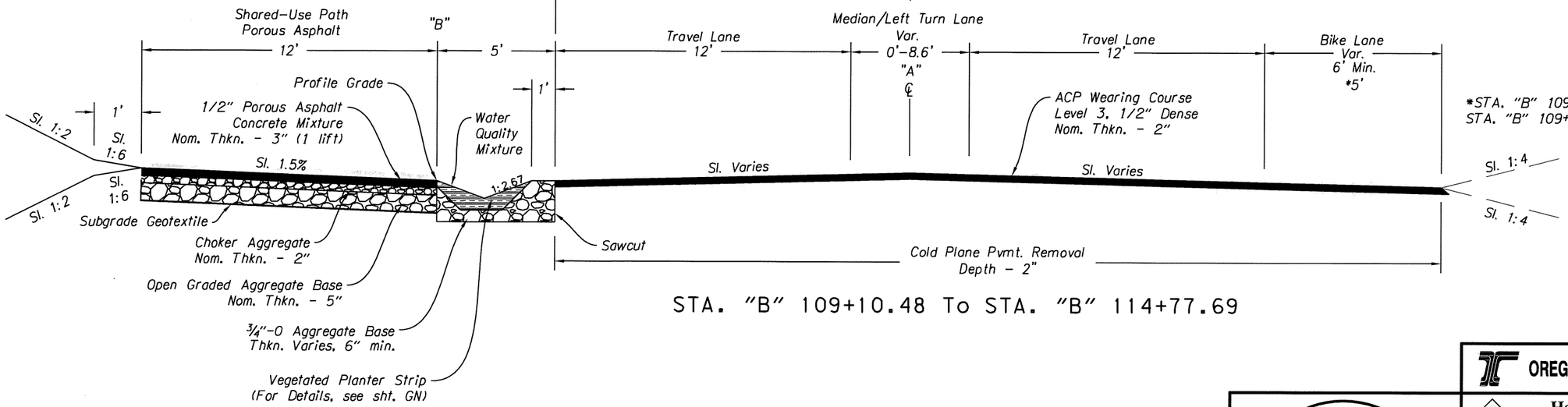

STA. "B" 109+10.48 To STA. "B" 114+77.69

Sta. "B"	Sl.	to Sta. "B"	Sl.
112+86.85	1.5%	113+26.85	1.5%
113+26.85	1.5%	113+76.85	-1.5%
113+76.85	-1.5%	114+77.69	-1.5%

Note: Slopes are labeled V:H

REGISTERED PROFESSIONAL ENGINEER
69245
OREGON
JULY 09, 2002
AARON J. ISENHART
EXPIRES: 06/30/2017

OREGON DEPARTMENT OF TRANSPORTATION

Harper Houf Peterson Righellis Inc.
ENGINEERS • PLANNERS • LANDSCAPE ARCHITECTS • SURVEYORS
205 SE Spokane Street, Suite 200 Portland, OR 97202 phone: 503.221.1131 www.hhpr.com fax: 503.221.1171

17TH AVE TRAIL: SE OCHOCO - SE MCLOUGHLIN
CITY OF MILWAUKIE
CLACKAMAS COUNTY

REVIEWED BY AJI
DESIGNED BY KJO
DRAFTED BY KJO

TYPICAL SECTIONS

SHEET NO. 2A

P:\MWK (City of Milwaukie)\MWK-24 (17TH Ave Trail)\MWK24-DWGS\SHEETS\ MWK24-2A.dwg

49V-026

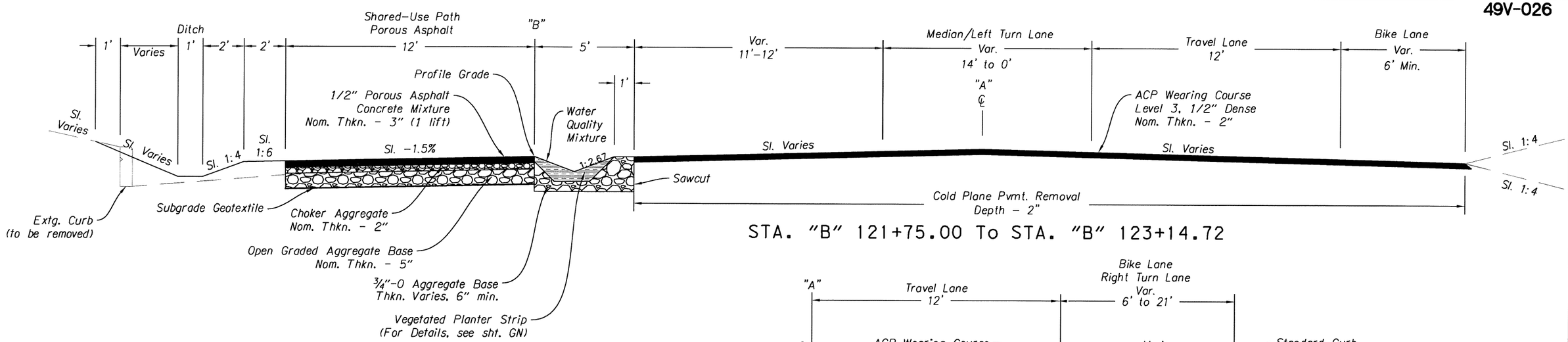

STA. "B" 121+75.00 To STA. "B" 123+14.72

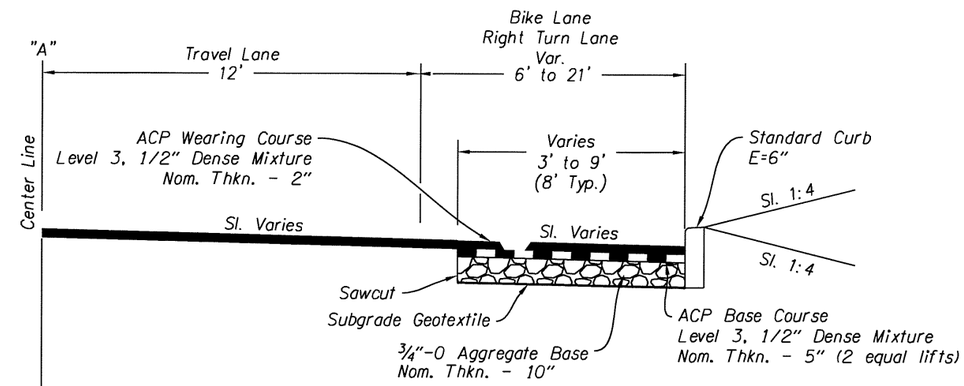

STA. "B" 114+77.69 To STA. "B" 116+17.52

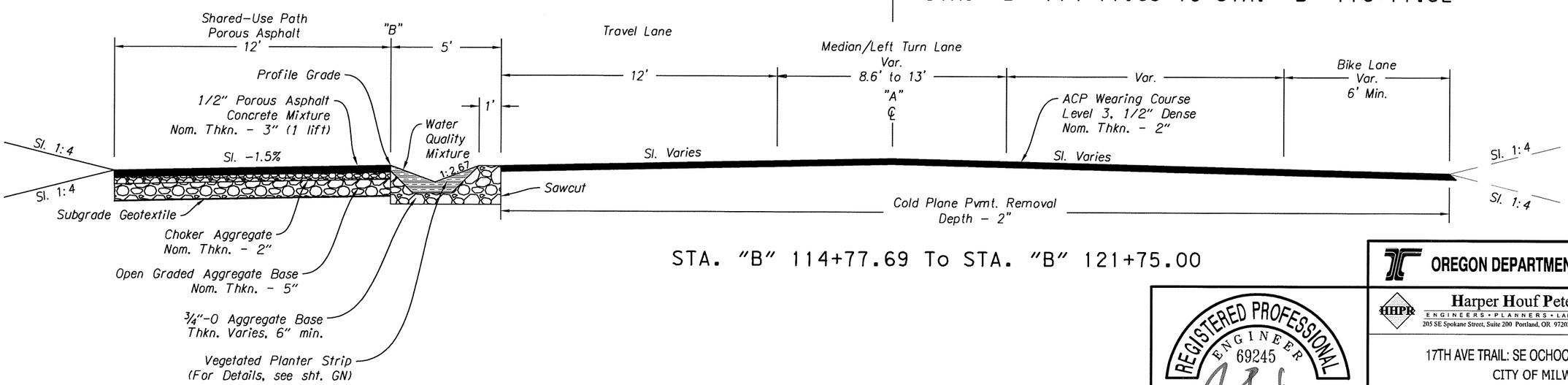

STA. "B" 114+77.69 To STA. "B" 121+75.00

Note: Slopes are labeled V:H

REGISTERED PROFESSIONAL ENGINEER
69245
OREGON
JULY 09, 2002
AARON J. ISENHART
EXPIRES: 06/30/2017

OREGON DEPARTMENT OF TRANSPORTATION

Harper Houf Peterson Righellis Inc.
ENGINEERS • PLANNERS • LANDSCAPE ARCHITECTS • SURVEYORS
205 SE Spokane Street, Suite 200 Portland, OR 97202 phone: 503.221.1131 www.hhpr.com fax: 503.221.1171

17TH AVE TRAIL: SE OCHOCO - SE MCLOUGHLIN
CITY OF MILWAUKIE
CLACKAMAS COUNTY

REVIEWED BY AJI
DESIGNED BY KJO
DRAFTED BY KJO

TYPICAL SECTIONS

SHEET NO. 2A-2

P:\MWK (City of Milwaukie)\MWK-24 (17TH Ave Trail)\MWK24-DWGS\SHEETS\ MWK24-2A.dwg

49V-026

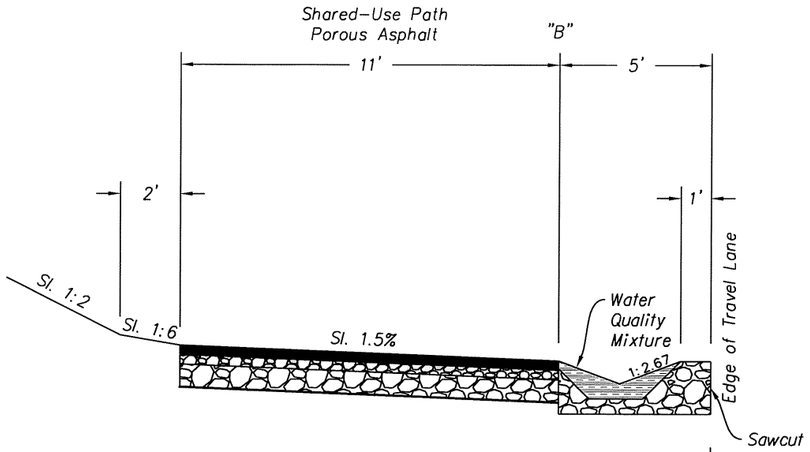

STA. "B" 125+00.00 To STA. "B" 129+96.29

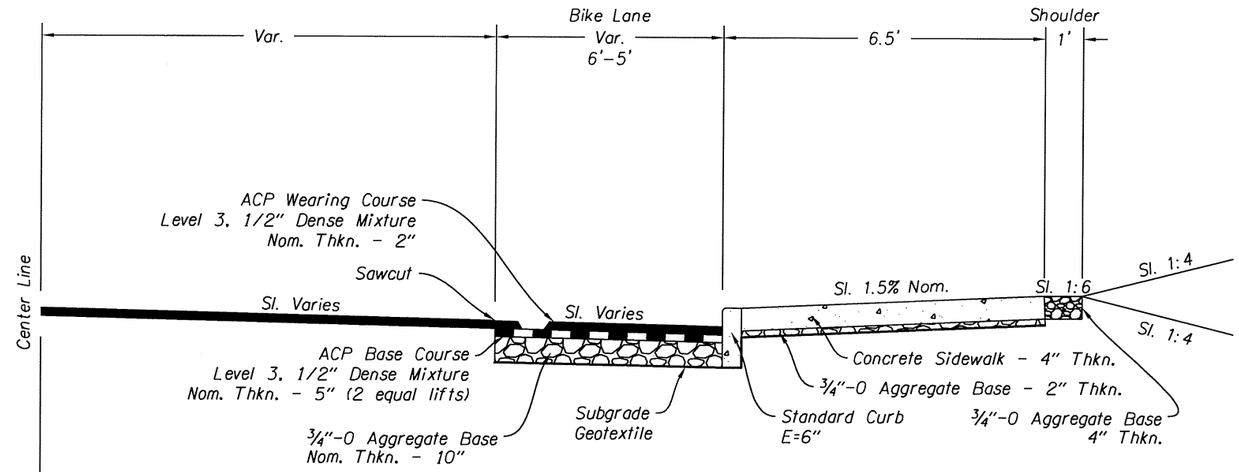

STA. "B" 127+81.69 To STA. "B" 129+99.19

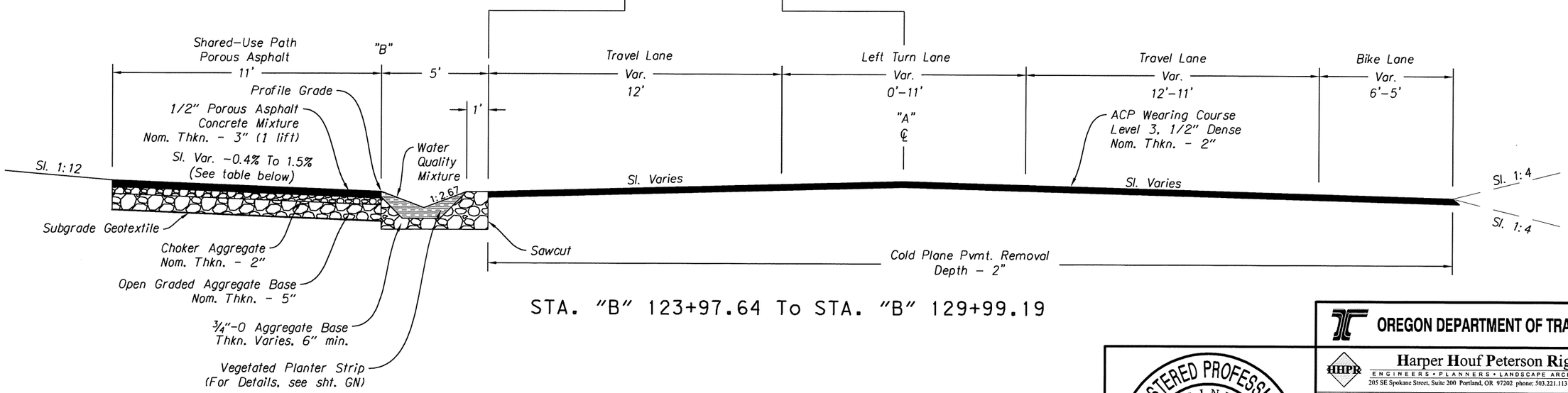

STA. "B" 123+97.64 To STA. "B" 129+99.19

Sta. "B"	Sl.	to Sta. "B"	Sl.
123+97.64	-0.4%	124+24.26	1.5%
124+24.46	1.5%	125+00.00	1.5%

Note: Slopes are labeled V:H

REGISTERED PROFESSIONAL ENGINEER
69245
OREGON
JULY 09, 2002
AARON J. ISENHART
EXPIRES: 06/30/2017

OREGON DEPARTMENT OF TRANSPORTATION

Harper Houf Peterson Righellis Inc.
ENGINEERS • PLANNERS • LANDSCAPE ARCHITECTS • SURVEYORS
205 SE Spokane Street, Suite 200 Portland, OR 97202 phone: 503.221.1131 www.hhpr.com fax: 503.221.1171

17TH AVE TRAIL: SE OCHOCO - SE MCLOUGHLIN
CITY OF MILWAUKIE
CLACKAMAS COUNTY

REVIEWED BY AJI
DESIGNED BY KJO
DRAFTED BY KJO

TYPICAL SECTIONS

SHEET NO. 2A-3

P:\MWK (City of Milwaukie)\MWK-24 (17TH Ave Trail)\MWK24-DWGS\SHEETS\ MWK24-2A.dwg

49V-026

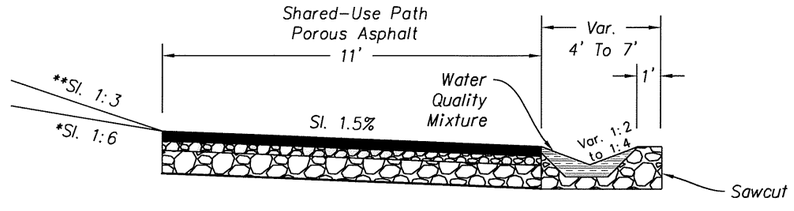

*STA. "B" 131+04.62 To STA. "B" 131+54.28
**STA. "B" 134+66.08 To STA. "B" 137+00.00

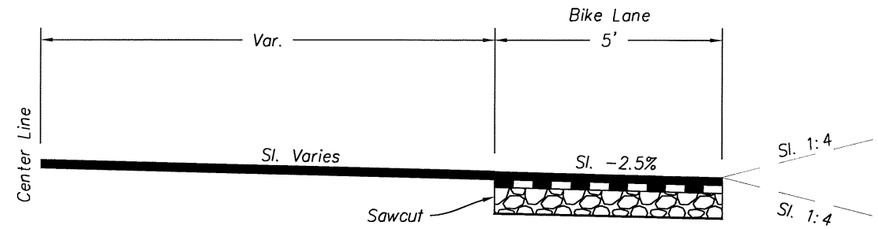

STA. "B" 131+45.32 To STA."B" 134+28.51

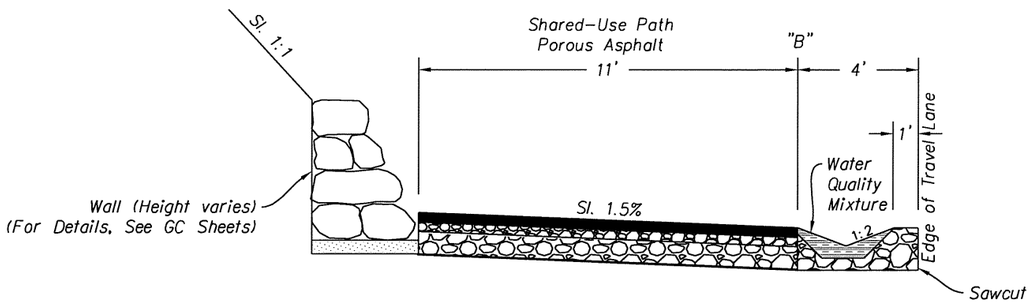

STA. "B" 131+54.28 To STA. "B" 132+80.82
STA. "B" 133+01.03 To STA. "B" 134+66.08

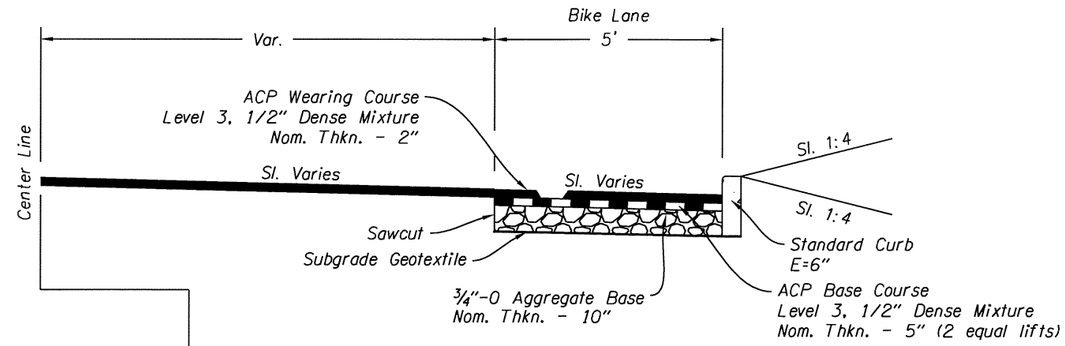

STA. "B" 131+03.18 To STA. "B" 131+45.32

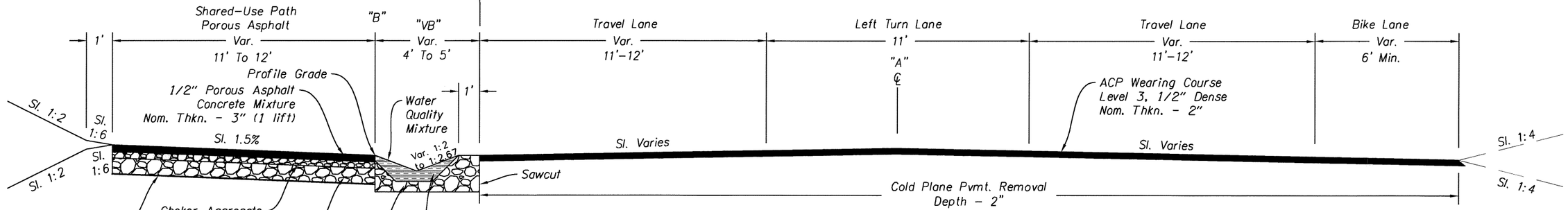

STA. "B" 131+03.18 To STA. "B" 149+65.80

Sta. "B"	VB	to Sta. "B"	VB
131+29.72	7'	131+74.38	4'
131+74.38	4'	137+55.83	4'
137+55.83	4'	137+92.29	5'
137+92.29	5'	147+19.41	5'
147+19.41	5'	149+54.02	4'

Note: Slopes are labeled V:H

REGISTERED PROFESSIONAL ENGINEER
69245
OREGON
JULY 09, 2002
AARON J. ISENHART
EXPIRES: 06/30/2017

OREGON DEPARTMENT OF TRANSPORTATION

Harper Houf Peterson Righellis Inc.
ENGINEERS • PLANNERS • LANDSCAPE ARCHITECTS • SURVEYORS
205 SE Spokane Street, Suite 200 Portland, OR 97202 phone: 503.221.1131 www.hhpr.com fax: 503.221.1171

17TH AVE TRAIL: SE OCHOCO - SE MCLOUGHLIN
CITY OF MILWAUKIE
CLACKAMAS COUNTY

REVIEWED BY AJI
DESIGNED BY KJO
DRAFTED BY KJO

TYPICAL SECTIONS

SHEET NO. 2A-4

P:\MWK (City of Milwaukie)\MWK-24 (17TH Ave Trail)\MWK24-DWGS\SHEETS\MWK24-2A.dwg

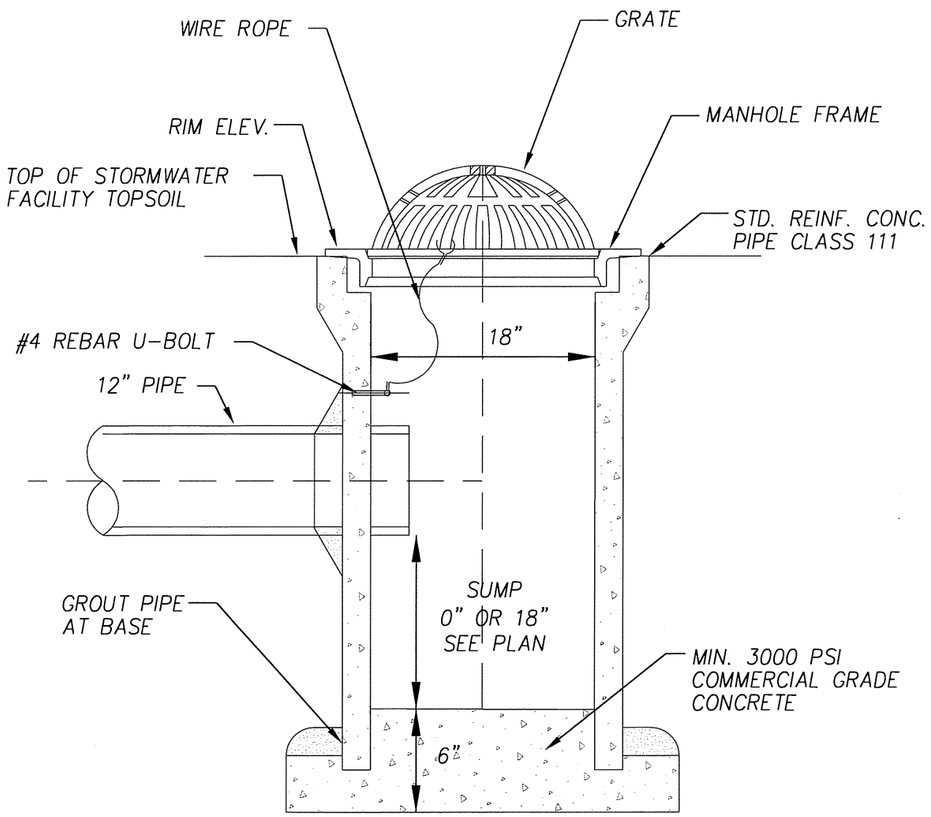

SECTION

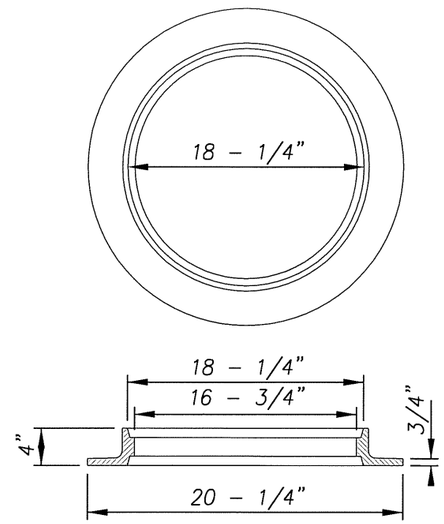

18" X 4" REVERSIBLE MANHOLE FRAME

N.T.S

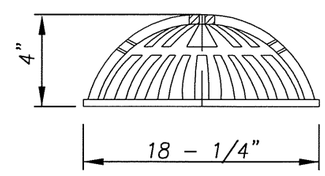

GRATE

N.T.S

NOTES:

1. SECURE GRATE IN PLACE WITH 54-INCHES OF WIRE ROPE. LOOP ENDS OF WIRE ROPE AROUND U-BOLT AND GRATE. CRIMP EACH END OF WIRE ROPE WITH 3" OVERLAP.

2. DRILL 2" DEEP HOLES INTO PIPE AND EPOXY #4 REBAR U-BOLT (2" X 4") IN HOLES.

3. GRATE TO BE CAST IRON, ASTM A48 CL30.

4. WIRE ROPE TO BE 1/8"-3/16" STAINLESS STEEL, 7 STRANDS OF 19 WIRE.

5. SEE PLAN FOR RIM ELEVATION.

CONCRETE INLET, TYPE AREA DRAIN

N.T.S

REGISTERED PROFESSIONAL ENGINEER 69245 OREGON JULY 09, 2002 AARON J. ISENHART

EXPIRES: 06/30/2017

OREGON DEPARTMENT OF TRANSPORTATION

Harper Houf Peterson Righellis Inc.
ENGINEERS • PLANNERS • LANDSCAPE ARCHITECTS • SURVEYORS
205 SE Spokane Street, Suite 200 Portland, OR 97202 phone: 503.221.1131 www.hhpr.com fax: 503.221.1171

17TH AVE TRAIL: SE OCHOCO - SE MCLOUGHLIN
CITY OF MILWAUKIE
CLACKAMAS COUNTY

REVIEWED BY AJI
DESIGNED BY KJO
DRAFTED BY KJO

DETAILS

SHEET NO. 2B

P:\MWK (City of Milwaukie)\MWK-24 (17TH Ave Trail)\MWK24-DWGS\SHEETS\ MWK24-2B.dwg

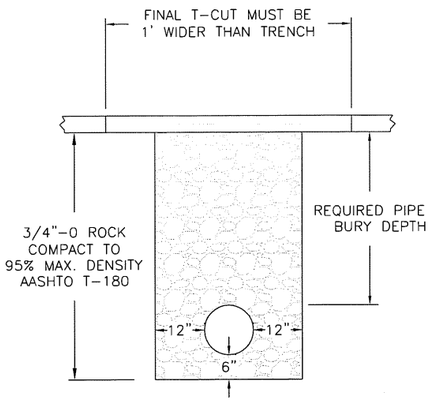

TRENCHES WITHIN PAVED AREAS

ASPHALT REPLACEMENT DEPTH	
CLASSIFICATION	DEPTH (IN.)
ARTERIAL/INDUSTRIAL	8 OR EXISTING
COLLECTOR	6 OR EXISTING
LOCAL	4 OR EXISTING

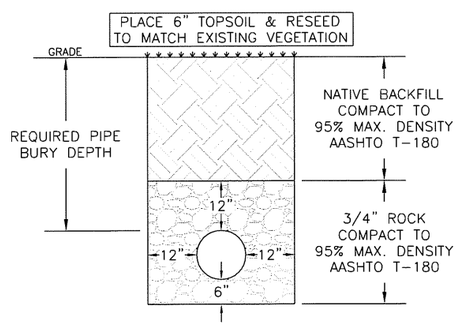

TRENCHES OUTSIDE OF PAVED AREAS

NOTES:

1. ADDITIONAL REPAIR IS REQUIRED FOR STREETS PAVED WITHIN THE LAST 5 YEARS.
2. FINAL SAWCUTS MUST BE 6" WIDER THAN THE WIDTH OF THE ROLLER USED FOR COMPACTION
3. PAVING SHALL CONSIST OF ASPHALT CONCRETE PAVEMENT AND BE PLACED IN LIFTS. EACH LIFT OF PAVEMENT SHALL HAVE A MAXIMUM DEPTH OF 3" & MINIMUM DEPTH OF 2".
4. INFRARED ASPHALT REPAIRS MAY BE REQUIRED AT THE DISCRETION OF THE ENGINEERING DIRECTOR.
5. UNDERMINED, BROKEN OR CRACKED PAVEMENT EDGES SHALL BE SAWCUT AND REMOVED AT THE DISCRETION OF THE ENGINEERING DIRECTOR.
6. CONTROL DENSITY FILL (CDF) MAY BE REQUIRED AT ENGINEER'S DISCRETION.

CITY OF MILWAUKIE, OREGON – PUBLIC WORKS DEPT.

Trench Patch

DRAWING NO. 515

APPROVED JASON RICE 12/14
CITY ENGINEER DATE

NO.	REVISIONS	DATE	BY
1	ADDED 8" ASPHALT FOR INDUSTRIAL AREAS	12/11	MCP
2	REVISED NOTES	12/12	MTC
3	ADDED T-CUT LANGUAGE	12/14	AJR

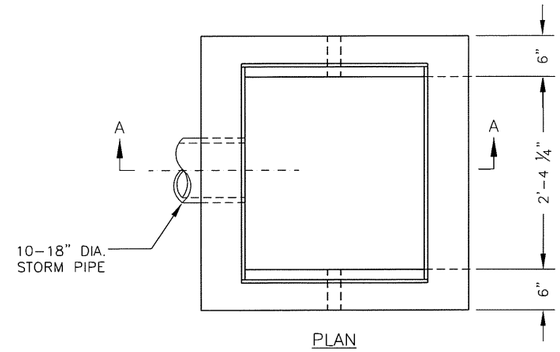

PLAN

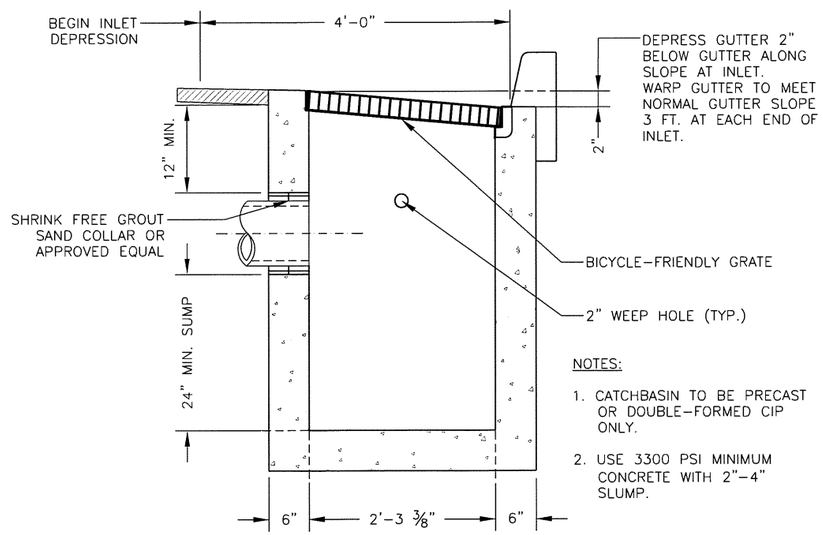

SECTION A–A

NOTES:

1. CATCHBASIN TO BE PRECAST OR DOUBLE-FORMED CIP ONLY.
2. USE 3300 PSI MINIMUM CONCRETE WITH 2"-4" SLUMP.

CITY OF MILWAUKIE, OREGON – PUBLIC WORKS DEPT.

G-2 Catchbasin

DRAWING NO. 600

APPROVED JASON RICE 12/14
CITY ENGINEER DATE

NO.	REVISIONS	DATE	BY
1	ADJUST MIN. PIPE SIZE, FORMATTING	12/10	MCP

"G-2" (MODIFIED) CATCHBASIN

REGISTERED PROFESSIONAL ENGINEER 69245 OREGON JULY 09, 2002 AARON J. ISENHART

EXPIRES: 06/30/2017

OREGON DEPARTMENT OF TRANSPORTATION

Harper Houf Peterson Righellis Inc.
ENGINEERS • PLANNERS • LANDSCAPE ARCHITECTS • SURVEYORS
205 SE Spokane Street, Suite 200 Portland, OR 97202 phone: 503.221.1131 www.hhpr.com fax: 503.221.1171

17TH AVE TRAIL: SE OCHOCO - SE MCLOUGHLIN
CITY OF MILWAUKIE
CLACKAMAS COUNTY

REVIEWED BY AJI
DESIGNED BY KJO
DRAFTED BY KJO

DETAILS

SHEET NO. 2B-2

P:\MWK (City of Milwaukie)\MWK-24 (17TH Ave Trail)\MWK24-DWGS\SHEETS\ MWK24-2B.dwg

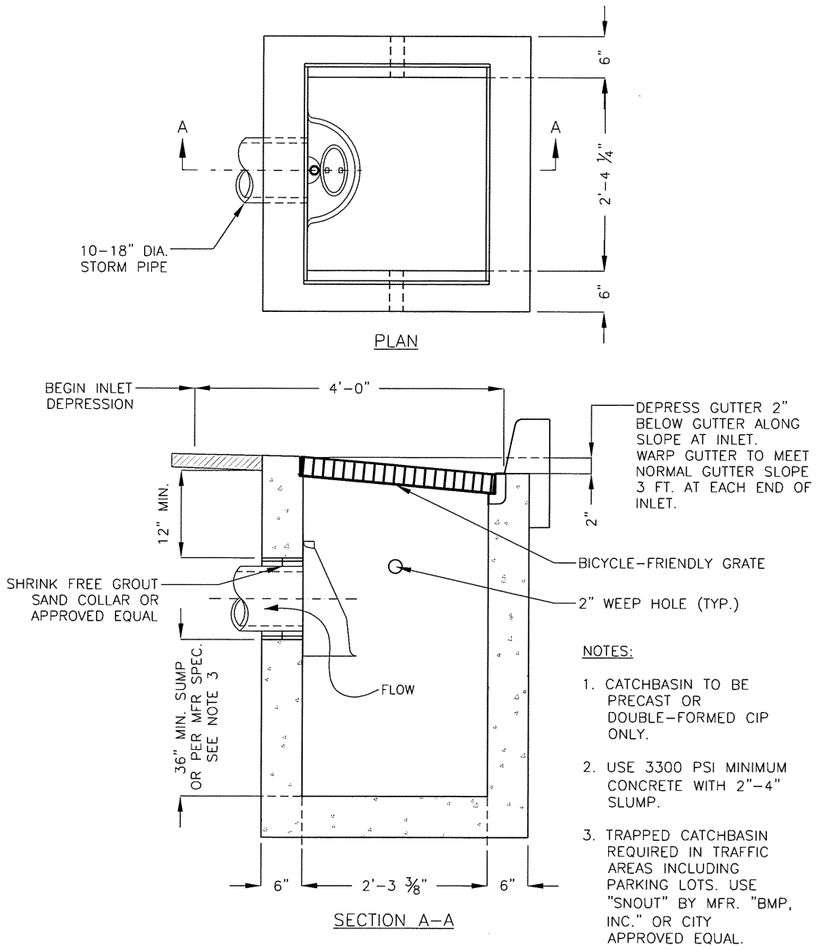

NOTES:

1. CATCHBASIN TO BE PRECAST OR DOUBLE-FORMED CIP ONLY.
2. USE 3300 PSI MINIMUM CONCRETE WITH 2"-4" SLUMP.
3. TRAPPED CATCHBASIN REQUIRED IN TRAFFIC AREAS INCLUDING PARKING LOTS. USE "SNOUT" BY MFR. "BMP, INC." OR CITY APPROVED EQUAL.

CITY OF MILWAUKIE, OREGON – PUBLIC WORKS DEPT.

G-2 Trapped Catchbasin – Snout

DRAWING NO. 601

APPROVED JASON RICE 12/14
CITY ENGINEER DATE

NO.	REVISIONS	DATE	BY
1	ADJUST MIN. PIPE SIZE, FORMATTING	12/10	MCP

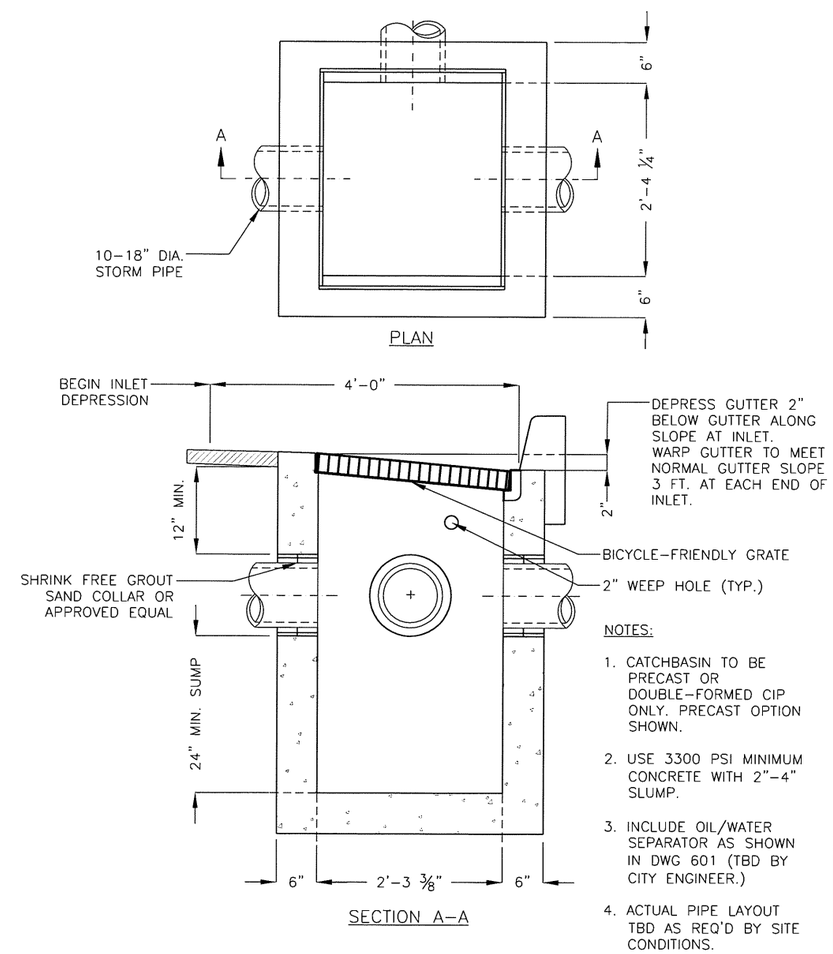

NOTES:

1. CATCHBASIN TO BE PRECAST OR DOUBLE-FORMED CIP ONLY. PRECAST OPTION SHOWN.
2. USE 3300 PSI MINIMUM CONCRETE WITH 2"-4" SLUMP.
3. INCLUDE OIL/WATER SEPARATOR AS SHOWN IN DWG 601 (TBD BY CITY ENGINEER.)
4. ACTUAL PIPE LAYOUT TBD AS REQ'D BY SITE CONDITIONS.

CITY OF MILWAUKIE, OREGON – PUBLIC WORKS DEPT.

G-2 Catchbasin Flow Through

DRAWING NO. 603

APPROVED JASON RICE 12/14
CITY ENGINEER DATE

NO.	REVISIONS	DATE	BY
1	ADJUST MIN. PIPE SIZE, FORMATTING	12/10	MCP

"G-2" (MODIFIED) CATCHBASIN – FLOW THROUGH

REGISTERED PROFESSIONAL ENGINEER 69245 OREGON JULY 09, 2002 AARON J. ISENHART

EXPIRES: 06/30/2017

OREGON DEPARTMENT OF TRANSPORTATION

Harper Houf Peterson Righellis Inc.
ENGINEERS • PLANNERS • LANDSCAPE ARCHITECTS • SURVEYORS
205 SE Spokane Street, Suite 200 Portland, OR 97202 phone: 503.221.1131 www.hhpr.com fax: 503.221.1171

17TH AVE TRAIL: SE OCHOCO - SE MCLOUGHLIN
CITY OF MILWAUKIE
CLACKAMAS COUNTY

REVIEWED BY AJI
DESIGNED BY KJO
DRAFTED BY KJO

DETAILS

SHEET NO. 2B-3

P:\MWK (City of Milwaukie)\MWK-24 (17TH Ave Trail)\MWK24-DWGS\SHEETS\ MWK24-2B.dwg

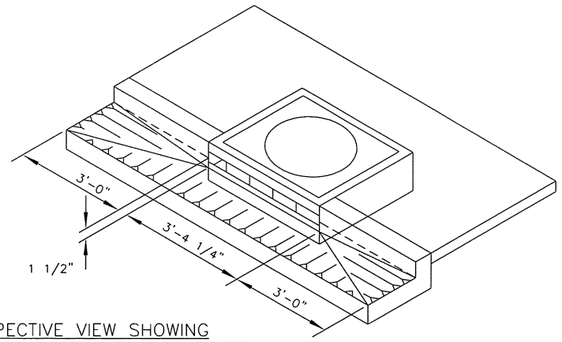

PERSPECTIVE VIEW SHOWING
DEPRESSED GUTTER AT CURB INLET

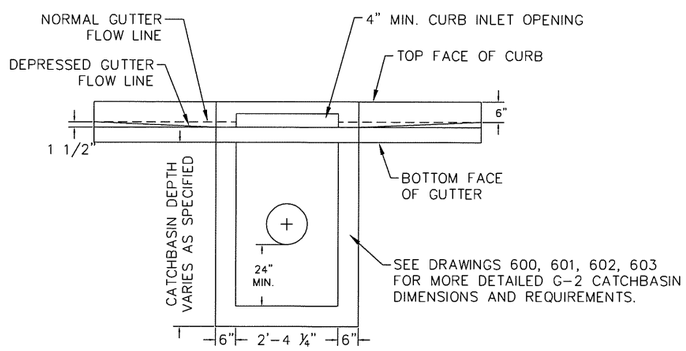

FRONT VIEW

NOTES:

1. ALL FABRICATED PARTS SHALL BE HOT-DIPPED GALVANIZED AFTER FABRICATION.
2. STRUCTURE MAY BE PRECAST OR DOUBLE-FORMED POURED IN PLACE ONLY.
3. USE 3300 PSI CONCRETE WITH A 2" TO 4" SLUMP.

CITY OF MILWAUKIE, OREGON – PUBLIC WORKS DEPT.					
Curb Inlet Catchbasin – Sidewalk					DRAWING NO. 604B
APPROVED JASON RICE 12/14	NO.	REVISIONS	DATE	BY	
	1	CHANGED SQ. LID TO MH, SUMP WAS 12"	12/09	BR	
	2	RECREATED DRAWING, MATCH G-2 DIMS.	12/10	MCP	
CITY ENGINEER DATE					

"CG-3" (MODIFIED) CATCHBASIN

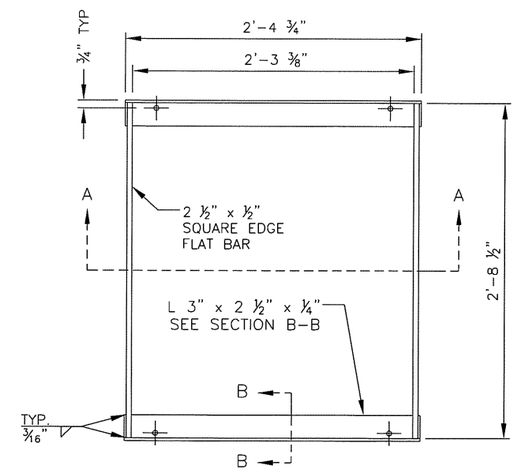

PLAN VIEW

NOTES:

1. USE GRATE SHOWN FOR G-2 CATCHBASINS AND DITCH BOTTOM INLETS.
2. FABRICATE WITH ASTM A36 STEEL.

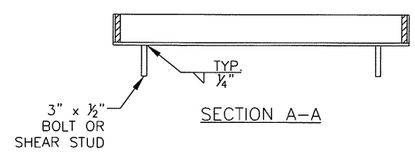

SECTION A-A

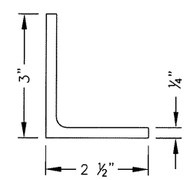

SECTION B-B
ENLARGED SCALE

CITY OF MILWAUKIE, OREGON – PUBLIC WORKS DEPT.					
G-2 Catchbasin Frame					DRAWING NO. 606
APPROVED JASON RICE 12/14	NO.	REVISIONS	DATE	BY	
	1	RECREATED DRAWING	12/10	MCP	
CITY ENGINEER DATE					

REGISTERED PROFESSIONAL ENGINEER 69245 OREGON JULY 09, 2002 AARON J. ISENHART

EXPIRES: 06/30/2017

OREGON DEPARTMENT OF TRANSPORTATION

Harper Houf Peterson Righellis Inc.
ENGINEERS • PLANNERS • LANDSCAPE ARCHITECTS • SURVEYORS
205 SE Spokane Street, Suite 200 Portland, OR 97202 phone: 503.221.1131 www.hhpr.com fax: 503.221.1171

17TH AVE TRAIL: SE OCHOCO - SE MCLOUGHLIN
CITY OF MILWAUKIE
CLACKAMAS COUNTY

REVIEWED BY AJI
DESIGNED BY KJO
DRAFTED BY KJO

DETAILS

SHEET NO. 2B-4

P:\MWK (City of Milwaukie)\MWK-24 (17TH Ave Trail)\MWK24-DWGS\SHEETS\ MWK24-2B.dwg

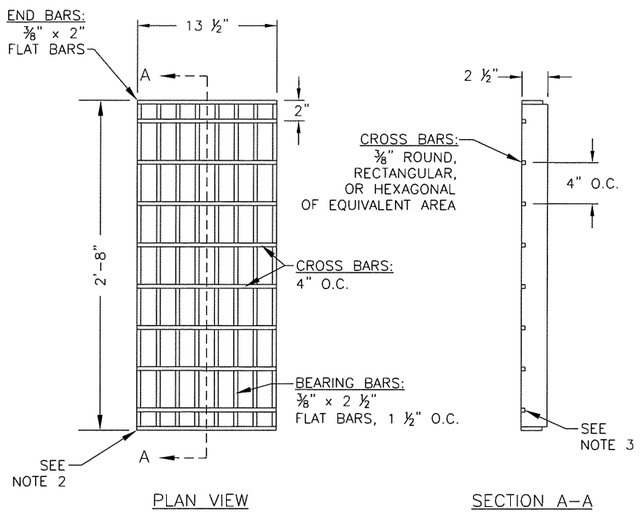

GRATE	SIZE	# OF BARS	TYPE	REMARKS
TYPE 2	1'–1½" x 2'–8"	8	G2	2 GRATES

NOTES:

1. CROSS BARS SHALL BE FLUSH WITH THE GRATE SURFACE.
2. OUTER BEARING BARS AND EVERY THIRD INNER BEARING BAR MUST BE WELDED TO THE END BARS (3/16" TYP.)
3. ALL CROSS BARS MUST BE EITHER FILLET WELDED, RESISTANCE WELDED OR ELECTROFORGED TO THE BEARING BARS (3/16" TYP.)

CITY OF MILWAUKIE, OREGON – PUBLIC WORKS DEPT.

G-2 Catchbasin Grate

DRAWING NO. 607

APPROVED 12/14
CITY ENGINEER DATE

NO.	REVISIONS	DATE	BY
1	RECREATED DRAWING	12/10	MCP

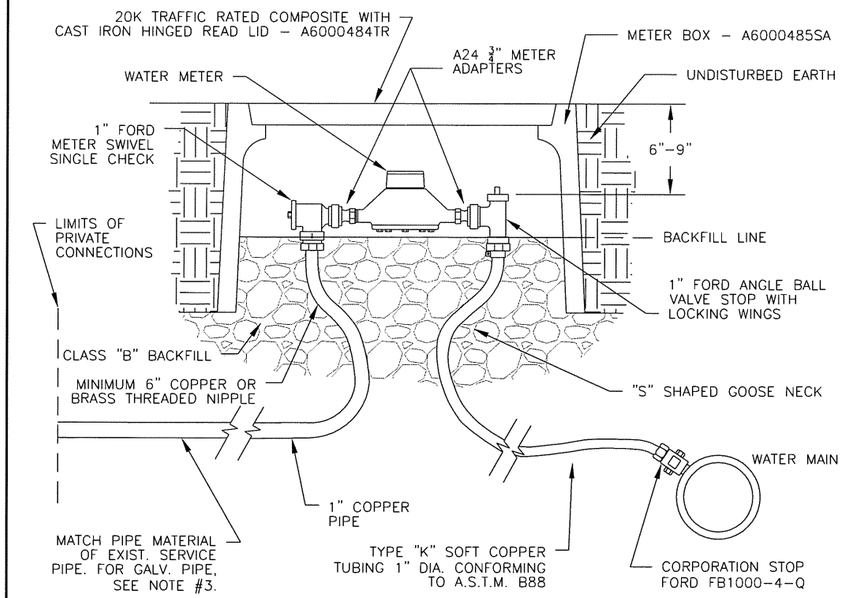

UNTHREADED GALVANIZED PIPE CONNECTION:

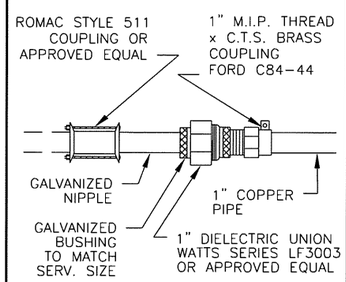

NOTES:

1. IF COPPER TUBING CROSSES CATHODICALLY PROTECTED LINE, ENCASE COPPER IN POLYETHYLENE TUBING FOR 24" (CENTERED AT THE CROSSING LINE) AND FASTEN WITH 2" WIDE ADHESIVE TAPE THAT IS COMPATIBLE WITH POLYETHYLENE.
2. PLACE METER BOXES (1) LOCATED BEHIND THE SIDEWALK WHERE THERE IS SUFFICIENT RIGHT–OF–WAY, (2) WITHIN THE PLANTER STRIP, EXCLUDING WATER QUALITY FACILITIES, (3) WITHIN THE SIDEWALK WITH THE BACK OF THE METER BOX AT THE BACK EDGE OF THE SIDEWALK.
3. CONNECT GALVANIZED SERVICE PIPE; (1) AT EXISTING THREADED FITTING WITHIN 5 FEET OF WATER METER; (2) RETHREAD EXISTING GALVANIZED SERVICE PIPE; (3) IF EXISTING PIPE IS IN POOR CONDITION AND CANNOT BE RETHREADED, USE UNTHREADED GALVANIZED PIPE CONNECTION DETAIL.
4. IF METER BOX IS LOCATED IN THE SIDEWALK, DIELECTRIC UNION WILL BE INSTALLED (1) 6" FROM BACK OF METER INSIDE OF METER BOX, (2) BEHIND BACK OF SIDEWALK.

CITY OF MILWAUKIE, OREGON – PUBLIC WORKS DEPT.

Standard 1 Inch Water Service

DRAWING NO. 401

APPROVED 12/14
CITY ENGINEER DATE

NO.	REVISIONS	DATE	BY
3	DRAWING REVISED	12/12	MCP
4	REMOVED COPPERSETTER	11/13	AJR
5	ADDED DIELECTRIC UNION NOTE	12/14	AJR

REGISTERED PROFESSIONAL ENGINEER 69245 OREGON JULY 09, 2002 AARON J. ISENHART

EXPIRES: 06/30/2017

OREGON DEPARTMENT OF TRANSPORTATION

Harper Houf Peterson Righellis Inc.
ENGINEERS • PLANNERS • LANDSCAPE ARCHITECTS • SURVEYORS
205 SE Spokane Street, Suite 200 Portland, OR 97202 phone: 503.221.1131 www.hhpr.com fax: 503.221.1171

17TH AVE TRAIL: SE OCHOCO - SE MCLOUGHLIN
CITY OF MILWAUKIE
CLACKAMAS COUNTY

REVIEWED BY AJI
DESIGNED BY KJO
DRAFTED BY KJO

DETAILS

SHEET NO. 2B-5

P:\MWK (City of Milwaukie)\MWK-24 (17TH Ave Trail)\MWK24-DWGS\SHEETS\ MWK24-2B.dwg

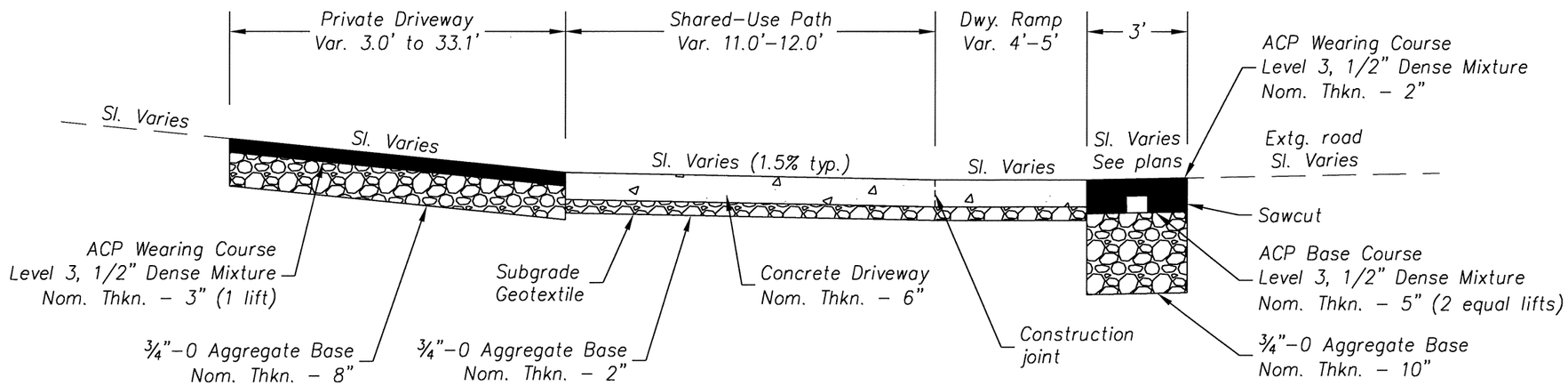

DRIVEWAY SECTION DETAIL

N.T.S.

REGISTERED PROFESSIONAL ENGINEER
69245
OREGON
JULY 09, 2002
AARON J. ISENHART

EXPIRES: 06/30/2017

OREGON DEPARTMENT OF TRANSPORTATION

Harper Houf Peterson Righellis Inc.
ENGINEERS • PLANNERS • LANDSCAPE ARCHITECTS • SURVEYORS
205 SE Spokane Street, Suite 200 Portland, OR 97202 phone: 503.221.1131 www.hhpr.com fax: 503.221.1171

17TH AVE TRAIL: SE OCHOCO - SE MCLOUGHLIN
CITY OF MILWAUKIE
CLACKAMAS COUNTY

REVIEWED BY AJI
DESIGNED BY KJO
DRAFTED BY KJO

DETAILS

SHEET NO. 2B-6

P:\MWK (City of Milwaukie)\MWK-24 (17TH Ave Trail)\MWK24-DWGS\SHEETS\ MWK24-2B.dwg

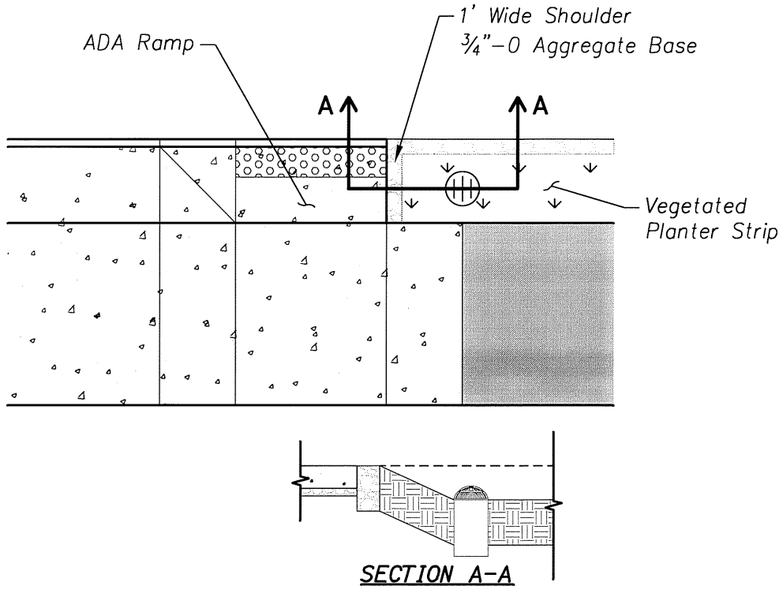

AGGREGATE SHOULDER DETAIL
N.T.S.

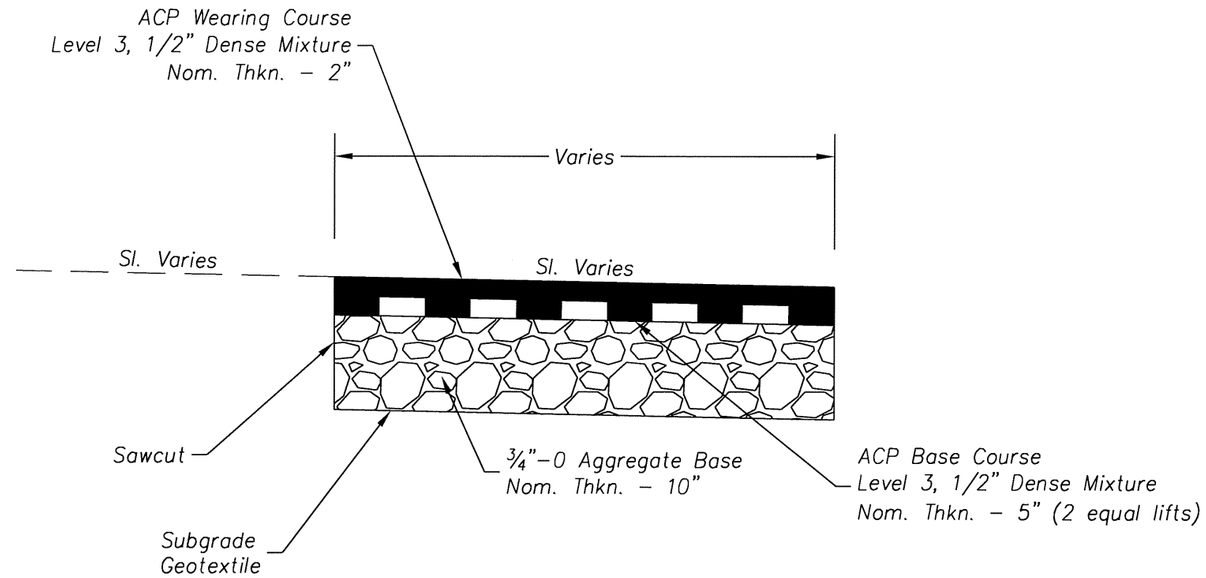

PAVEMENT SECTION DETAIL
N.T.S.

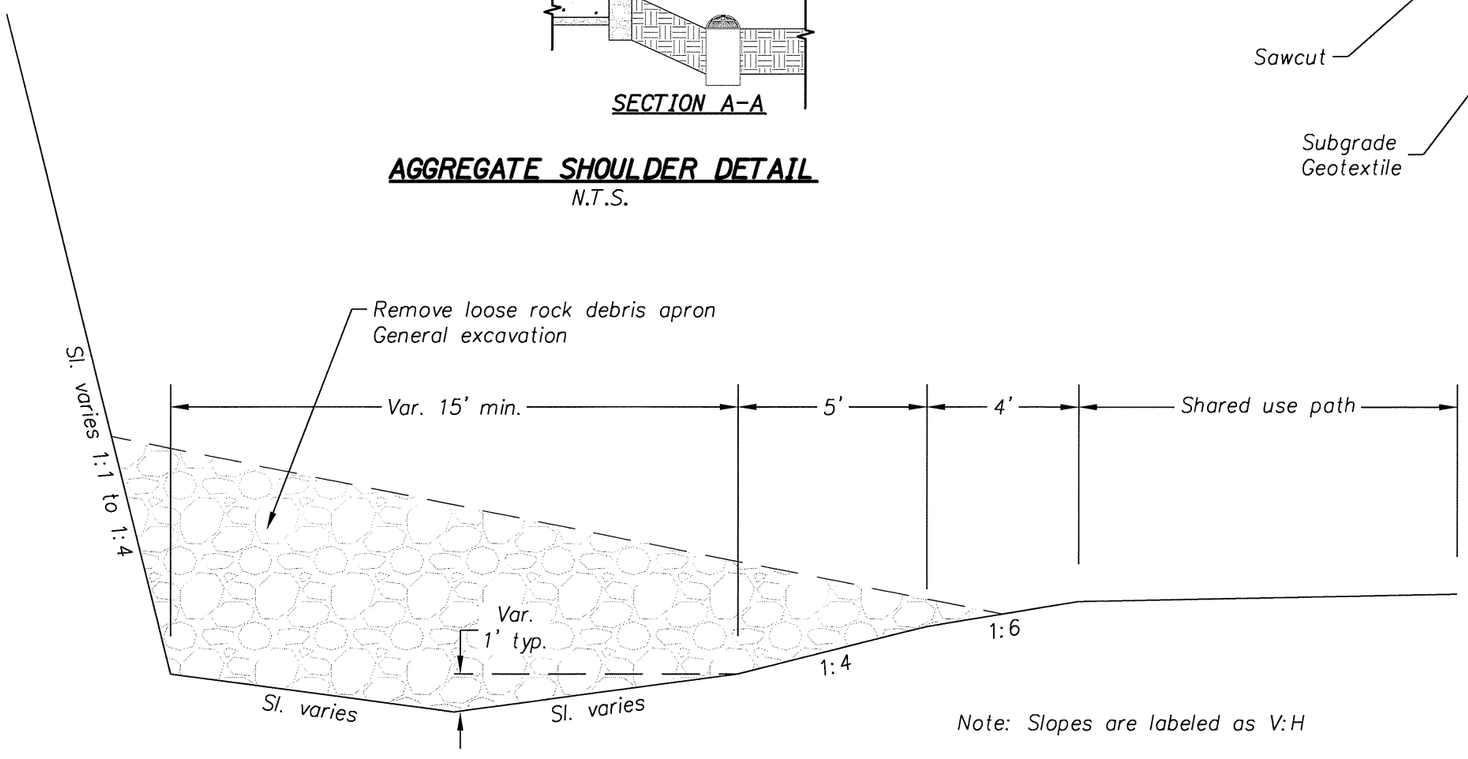

ROCKFALL DEBRIS REMOVAL
N.T.S.

REGISTERED PROFESSIONAL ENGINEER
69245
OREGON
JULY 09, 2002
AARON J. ISENHART
EXPIRES: 06/30/2017

OREGON DEPARTMENT OF TRANSPORTATION

Harper Houf Peterson Righellis Inc.
ENGINEERS • PLANNERS • LANDSCAPE ARCHITECTS • SURVEYORS
205 SE Spokane Street, Suite 200 Portland, OR 97202 phone: 503.221.1131 www.hhpr.com fax: 503.221.1171

17TH AVE TRAIL: SE OCHOCO - SE MCLOUGHLIN
CITY OF MILWAUKIE
CLACKAMAS COUNTY

REVIEWED BY AJI
DESIGNED BY KJO
DRAFTED BY KJO

DETAILS

SHEET NO. 2B-7

P:\MWK (City of Milwaukie)\MWK-24 (17TH Ave Trail)\MWK24-DWGS\SHEETS\ MWK24-2B.dwg

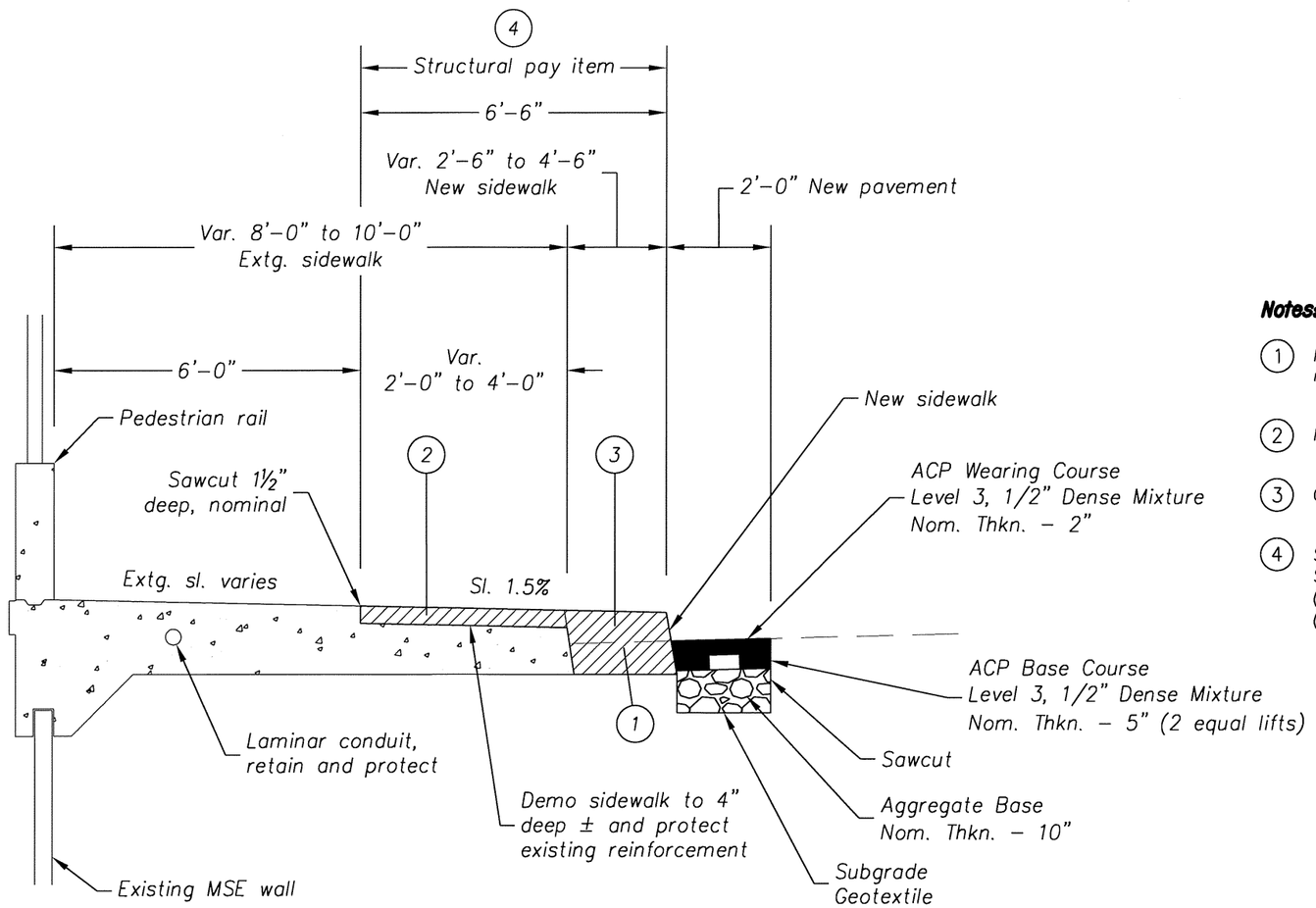

Notes:

1. Remove extg. asphalt conc. wearing surface as required
2. Partial demolition of extg. walk
3. Construct new walk
4. Sta. "B" 100+02.46 to Sta. "B" 101+35.00
   Structural pay item
   (For details, see Bridge Plans)
   (For estimated quantities, see special provisions)

SIDEWALK WIDENING CONCRETE PATH DETAIL
NO SCALE

REGISTERED PROFESSIONAL ENGINEER 69245 OREGON JULY 09, 2002 AARON J. ISENHART
EXPIRES: 06/30/2017

OREGON DEPARTMENT OF TRANSPORTATION

Harper Houf Peterson Righellis Inc.
ENGINEERS • PLANNERS • LANDSCAPE ARCHITECTS • SURVEYORS
205 SE Spokane Street, Suite 200 Portland, OR 97202 phone: 503.221.1131 www.hhpr.com fax: 503.221.1171

17TH AVE TRAIL: SE OCHOCO - SE MCLOUGHLIN
CITY OF MILWAUKIE
CLACKAMAS COUNTY

REVIEWED BY AJI
DESIGNED BY KJO
DRAFTED BY KJO

DETAILS

SHEET NO. 2B-8

P:\MWK (City of Milwaukie)\MWK-24 (17TH Ave Trail)\MWK24-DWGS\SHEETS\ MWK24-2B.dwg

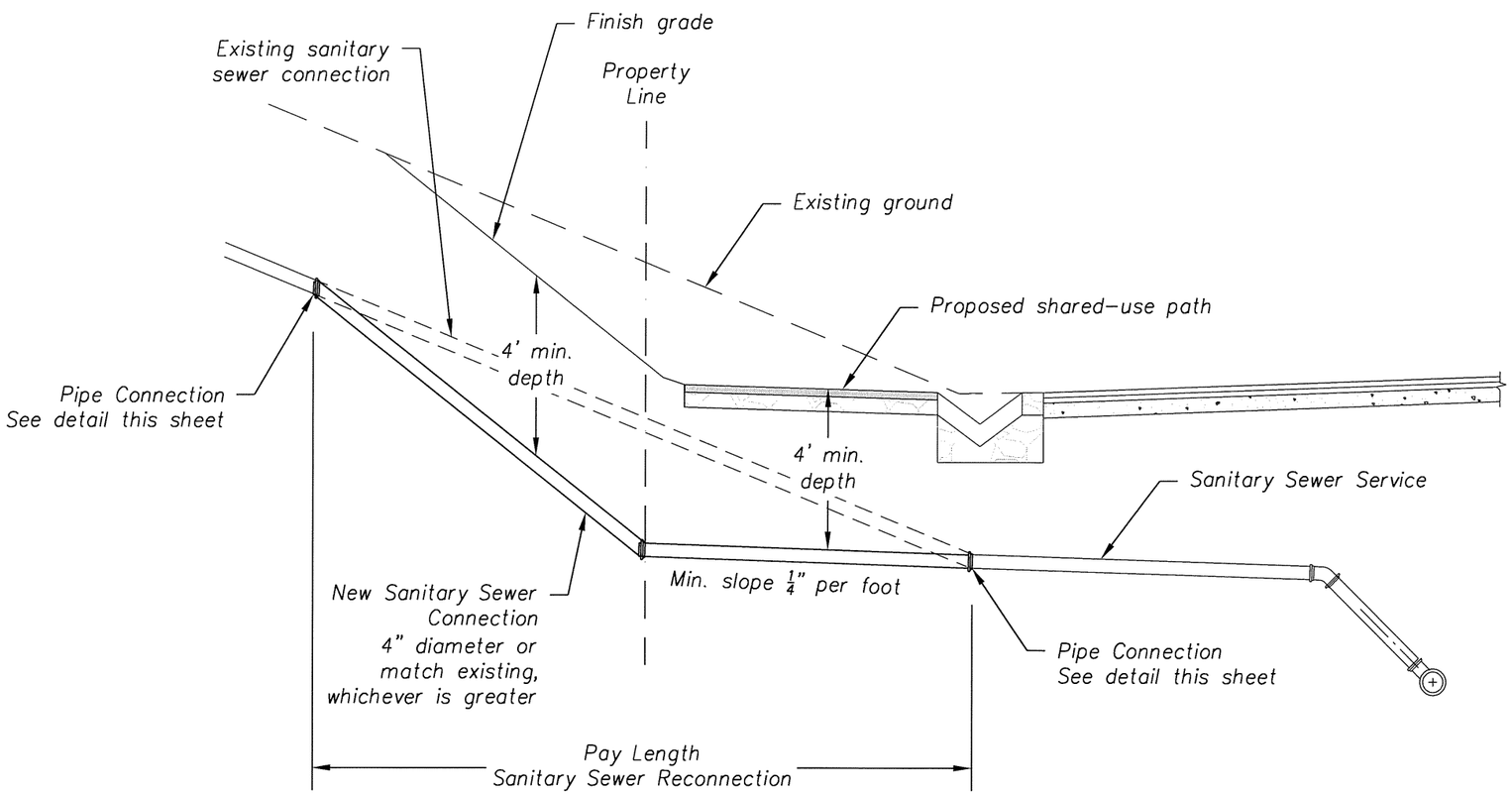

Notes:

1. Service shall not be backfilled prior to inspection.
2. Install tracer wire (green, 18 gauge, insulated copper).
3. All fittings shall be pre-formed and gasketed.

SERVICE LINE RECONNECTION DETAIL

N.T.S.

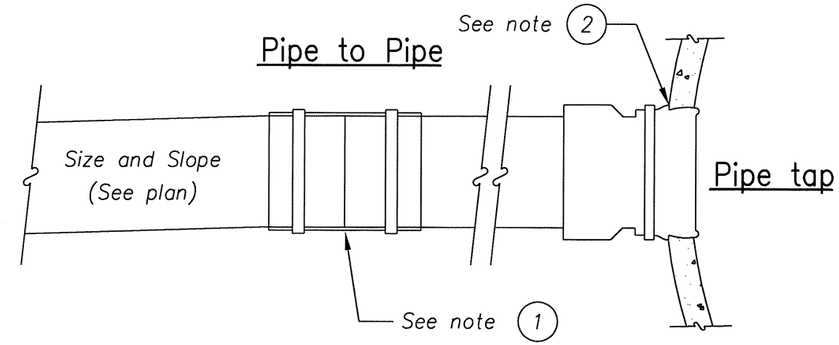

1. Use flexible coupling with stainless steel clamps or approved equal as required.
2. Provide 48 hours notice to City of Milwaukie Public Works (503-786-7600). City of Milwaukie to provide and install tap if needed. contractor to excavate, shore, and backfill.

PIPE CONNECTION DETAIL

N.T.S.

REGISTERED PROFESSIONAL ENGINEER 69245 OREGON JULY 09, 2002 AARON J. ISENHART

EXPIRES: 06/30/2017

OREGON DEPARTMENT OF TRANSPORTATION

Harper Houf Peterson Righellis Inc.
ENGINEERS • PLANNERS • LANDSCAPE ARCHITECTS • SURVEYORS
205 SE Spokane Street, Suite 200 Portland, OR 97202 phone: 503.221.1131 www.hhpr.com fax: 503.221.1171

17TH AVE TRAIL: SE OCHOCO - SE MCLOUGHLIN
CITY OF MILWAUKIE
CLACKAMAS COUNTY

REVIEWED BY AJI
DESIGNED BY KJO
DRAFTED BY KJO

DETAILS

SHEET NO. 2B-9

P:\MWK (City of Milwaukie)\MWK-24 (17TH Ave Trail)\MWK24-DWGS\SHEETS\MWK24-2B.dwg

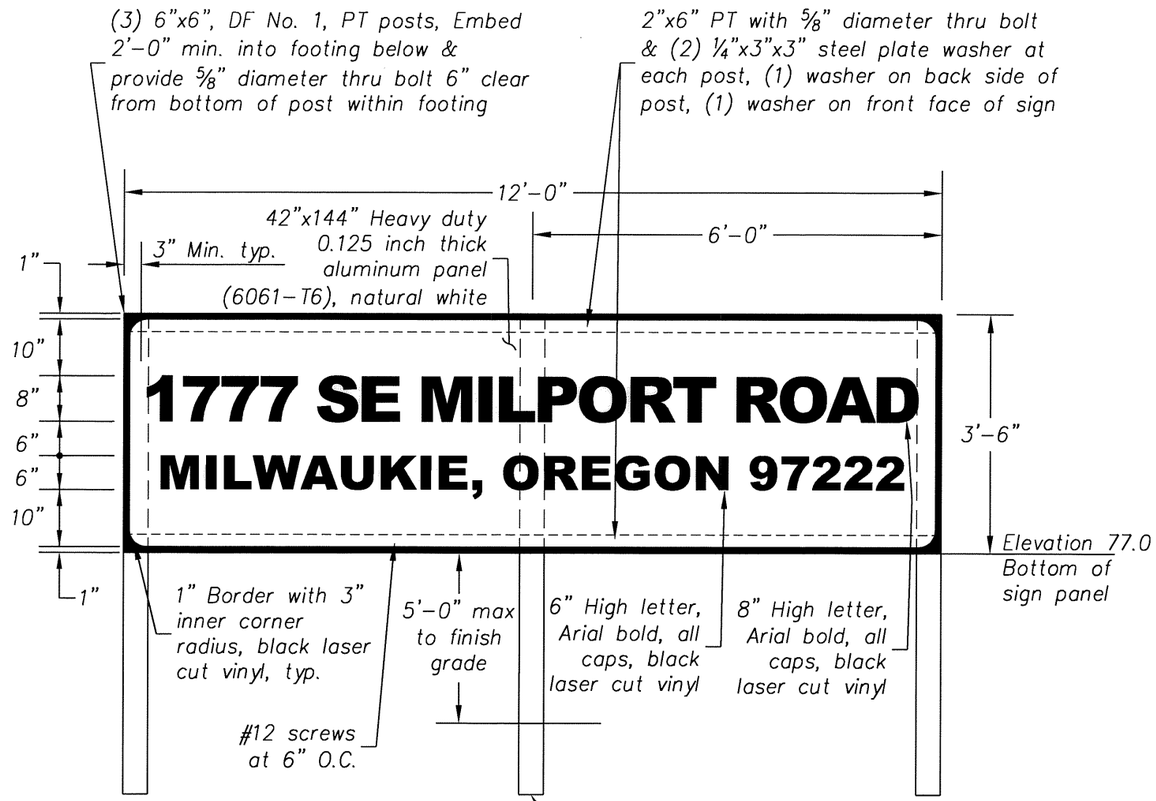

Note:
1. All fasteners shall be hot-dip galvanized.
2. Wood pressure treatment shall be rated for direct contact with concrete and soil.
3. All pressure treated members that are cut or bored shall have the exposed section treated to resisted rot and deterioration.

ELEVATION
NO SCALE

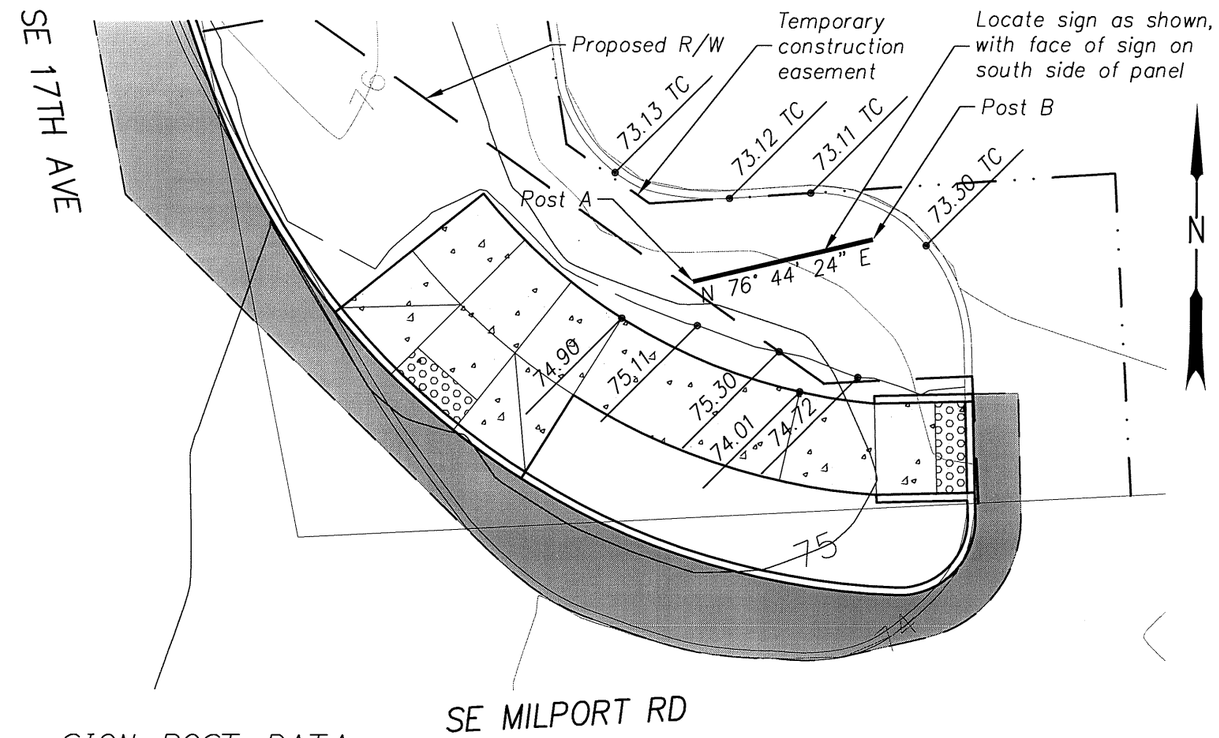

SIGN POST DATA

	Station	Offset
Post A	'A' 53+44.99	58.12' Rt.
Post B	'A' 53+45.46	69.61' Rt.

PLAN
1"=10'

REGISTERED PROFESSIONAL ENGINEER 69245 OREGON JULY 09, 2002 AARON J. ISENHART

EXPIRES: 06/30/2017

OREGON DEPARTMENT OF TRANSPORTATION

Harper Houf Peterson Righellis Inc.
ENGINEERS • PLANNERS • LANDSCAPE ARCHITECTS • SURVEYORS
205 SE Spokane Street, Suite 200 Portland, OR 97202 phone: 503.221.1131 www.hhpr.com fax: 503.221.1171

17TH AVE TRAIL: SE OCHOCO - SE MCLOUGHLIN
CITY OF MILWAUKIE
CLACKAMAS COUNTY

REVIEWED BY AJI
DESIGNED BY KJO
DRAFTED BY KJO

DETAILS

SHEET NO. 2B-10

P:\MWK (City of Milwaukie)\MWK-24 (17TH Ave Trail)\MWK24-DWGS\SHEETS\ MWK24-2B.dwg

STAGE 1:
SE 17th Ave NB Closure

49V-026

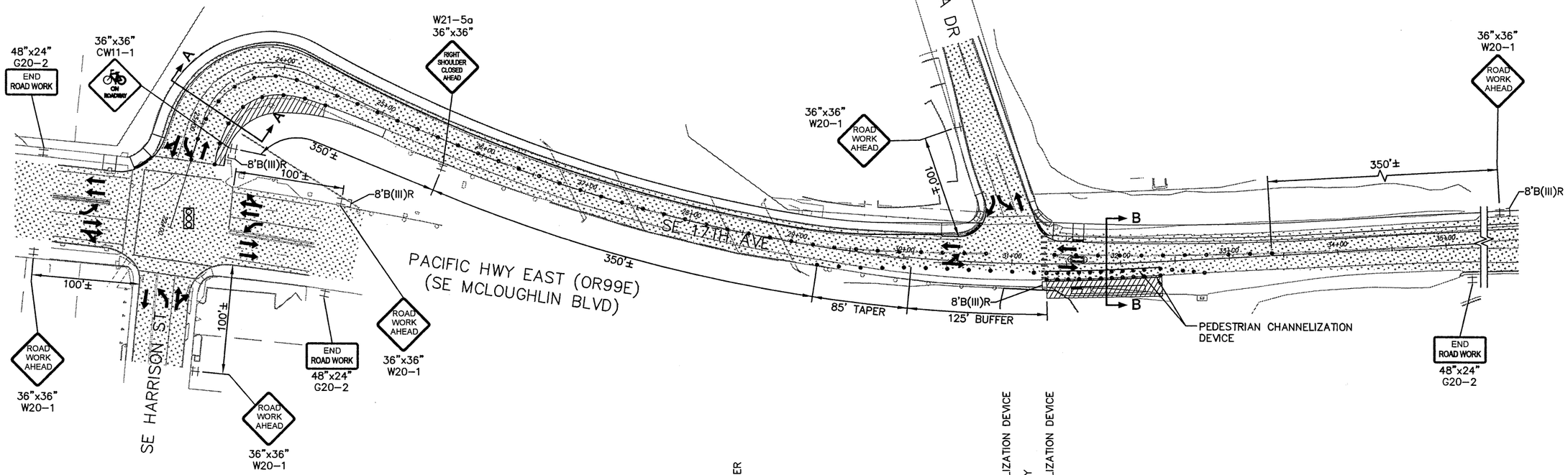

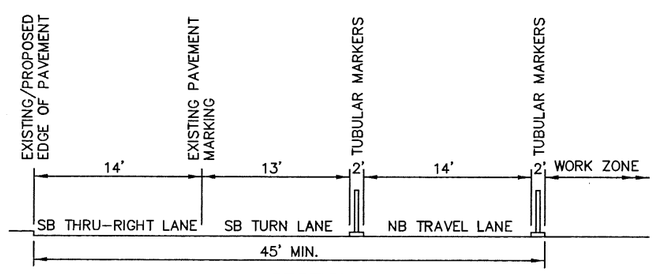

SECTION A–A
STAGE 1
(NOT TO SCALE)

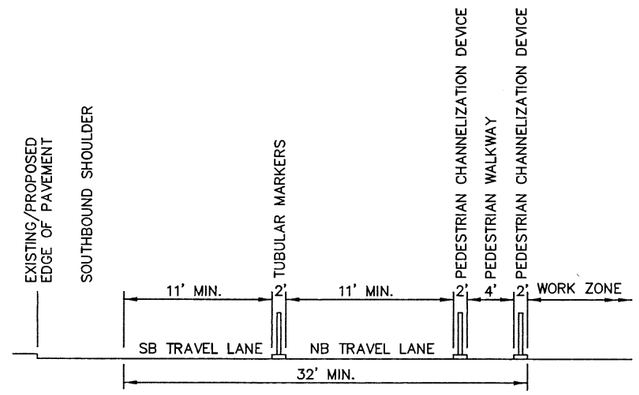

SECTION B–B
STAGE 1
(NOT TO SCALE)

LEGEND

- UNDER TRAFFIC
- UNDER CONSTRUCTION
- 28" TUBULAR MARKERS ON 20' MAX SPACING (10' MAX SPACING FOR TAPERS AND TRANSITIONS TO SIDE STREETS).
- PEDESTRIAN CHANNELIZATION DEVICE
- DIRECTION OF TRAFFIC
- TEMPORARY SIGN SUPPORT
- 8' B(III)L, R, LR BARRICADE
- EXISTING TRAFFIC SIGNAL

GENERAL NOTES:

1. NB TRAFFIC TO BE DETOURED DURING STAGE 1, SEE SHEET 2C–4.
2. CONTACT ODOT REGION 1 SIGNAL MANAGER TO ADJUST SIGNAL TIMING FOR THE INTERSECTION OF SE 17TH AVE/ SE HARRISON ST AT OR99E.
3. ALL SIGNS SHALL BE TYPE "04" UNLESS OTHERWISE NOTED.

REGISTERED PROFESSIONAL ENGINEER 18,503 OREGON JULY 10, 1996 BRIAN K. COPELAND

EXPIRES: DEC. 31, 2015

OREGON DEPARTMENT OF TRANSPORTATION

DKS 720 SW Washington Street, Suite 500 Portland, Oregon 97205 (503) 243-3500 www.dksassociates.com

17TH AVE TRAIL: SE OCHOCO - SE MCLOUGHLIN

CITY OF MILWAUKIE

CLACKAMAS COUNTY

DESIGNED BY: K. Svicarovich
REVIEWED BY: B. Copeland
DRAWN BY: M. Zarkos
FC: N/A MP: N/A

ACCOMPANIED BY DWGS. TM800, TM820, TM821, TM840, TM841, TM842, TM843, TM844, TM850, and T.R.S. Dwgs. 2C-2 thru 2C-10

TRAFFIC CONTROL DETAILS

CITY OF MILWAUKIE DWG. NO.

TSSU NO. T.R.S. DWG. NO. 2C

STAGE I:
SE 17th Ave NB Closure

49V-026

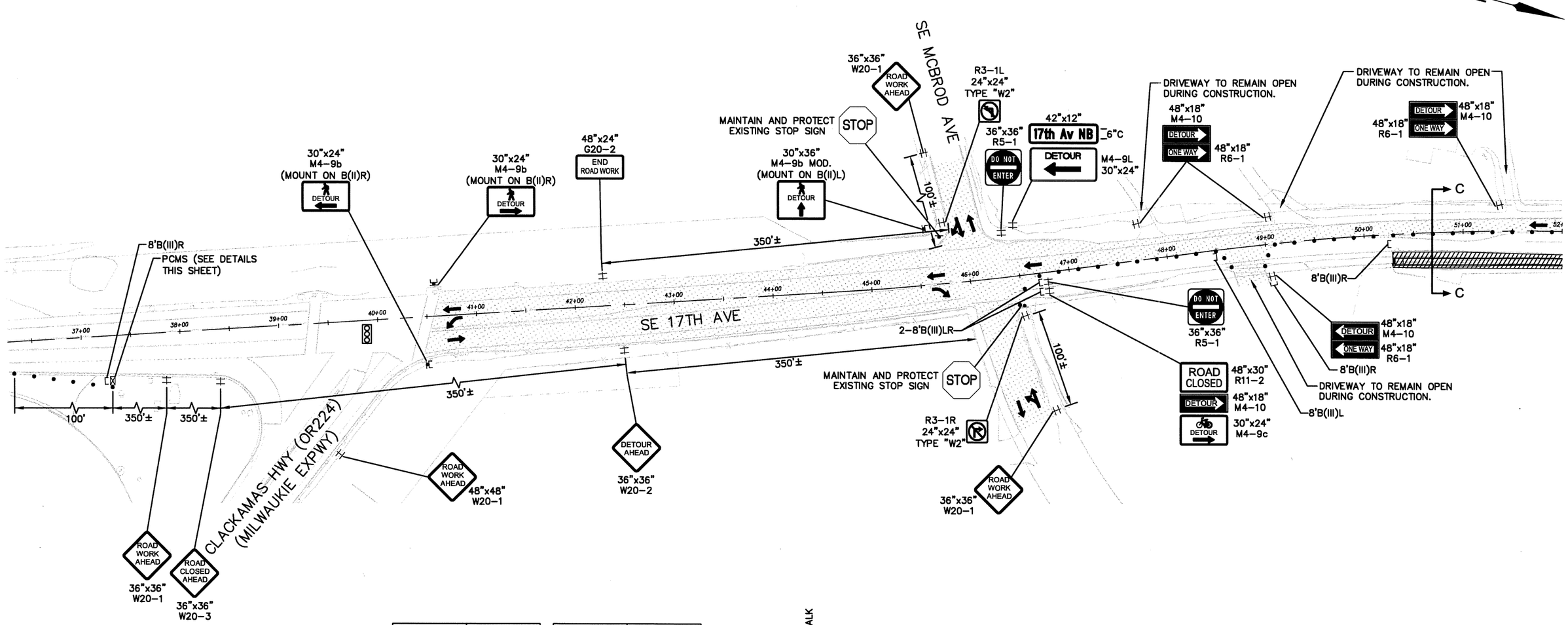

17TH AVE CLOSED MMM DD	ROADWORK MMM DD-MMM DD
ADVANCE MESSAGES	

17TH AVE CLOSED AHEAD	FOLLOW DETOUR ROUTE
CONSTRUCTION MESSAGES	

PORTABLE CHANGEABLE MESSAGE SIGN
(SUGGESTED MESSAGE)
(LOCATE AS DIRECTED)

LEGEND

- UNDER TRAFFIC
- UNDER CONSTRUCTION
- 28" TUBULAR MARKERS ON 20' MAX SPACING (10' MAX SPACING FOR TAPERS AND TRANSITIONS TO SIDE STREETS).
- DIRECTION OF TRAFFIC
- TEMPORARY SIGN ON 4' B(II)(R, L, OR LR BARRICADE)
- TEMPORARY SIGN SUPPORT
- 8' B(III)L, R, LR BARRICADE
- PORTABLE CHANGEABLE MESSAGE SIGN (PCMS)
- EXISTING TRAFFIC SIGNAL

GENERAL NOTES:

1. NB TRAFFIC TO BE DETOURED DURING STAGE 1, SEE SHEET 2C-4.
2. ALL SIGNS SHALL BE TYPE "04" UNLESS OTHERWISE NOTED.

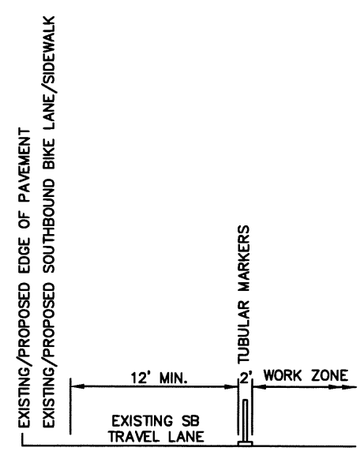

SECTION C-C
STAGE 1
(NOT TO SCALE)

REGISTERED PROFESSIONAL ENGINEER 18,503 OREGON JULY 10, 1996 BRIAN K. COPELAND
EXPIRES: DEC. 31, 2015

OREGON DEPARTMENT OF TRANSPORTATION

DKS 720 SW Washington Street, Suite 500 Portland, Oregon 97205 (503) 243-3500 www.dksassociates.com

17TH AVE TRAIL: SE OCHOCO - SE MCLOUGHLIN
CITY OF MILWAUKIE
CLACKAMAS COUNTY

DESIGNED BY: K. Svicarovich
REVIEWED BY: B. Copeland
DRAWN BY: M. Zarkas
FC: N/A MP: N/A

TRAFFIC CONTROL DETAILS

CITY OF MILWAUKIE DWG. NO.
TSSU NO. T.R.S. DWG. NO. 2C-2

X:\Projects\2014\P14081-000 (Milwaukie 17th Av Trail)\ACAD\ 2C-2.dwg

STAGE I:
SE 17th Ave NB Closure

49V-026

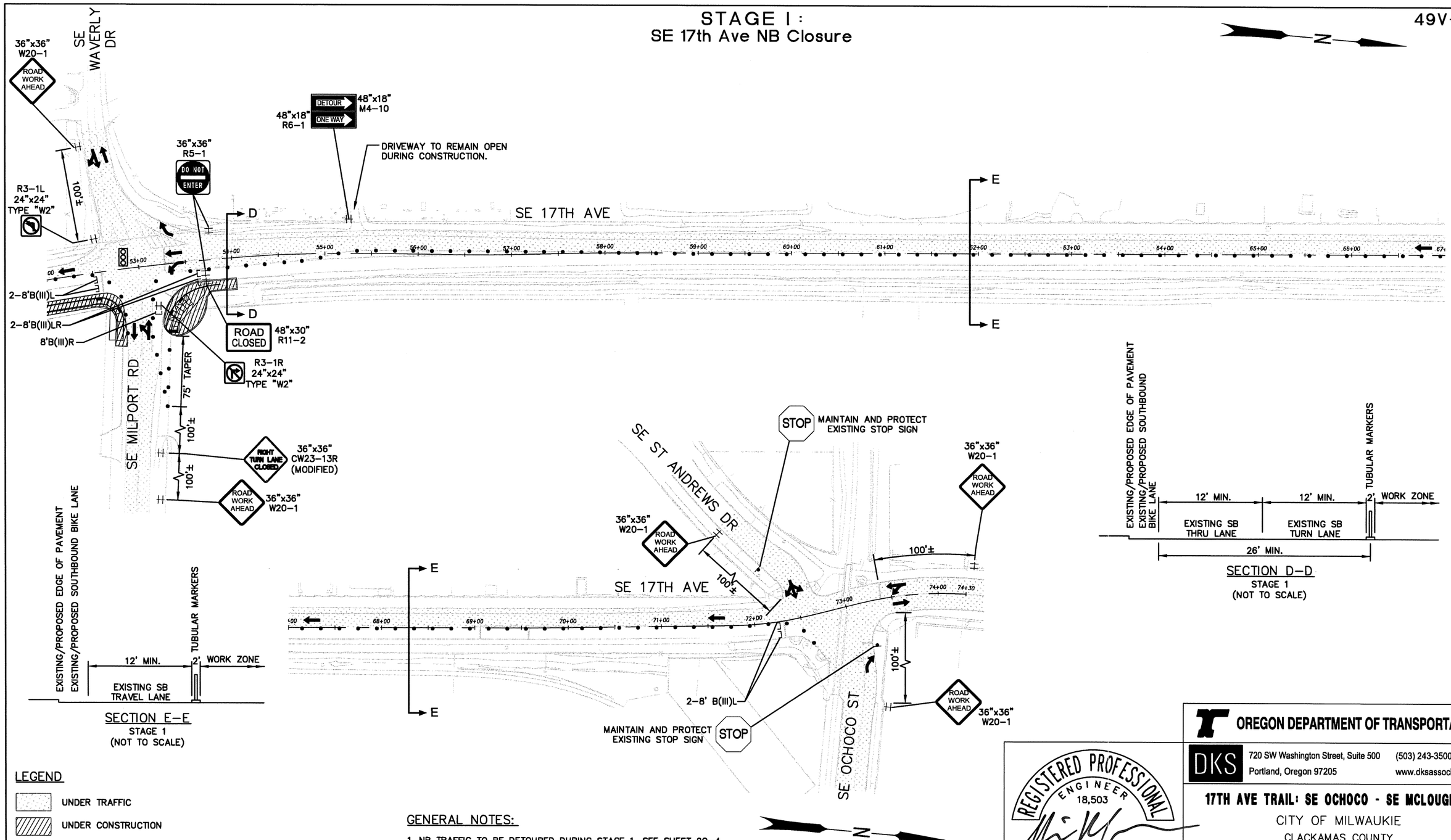

LEGEND

- UNDER TRAFFIC
- UNDER CONSTRUCTION
- • • • 28" TUBULAR MARKERS ON 20' MAX SPACING (10' MAX SPACING FOR TAPERS AND TRANSITIONS TO SIDE STREETS).
- ← DIRECTION OF TRAFFIC
- ⌗ TEMPORARY SIGN SUPPORT
- [8' B(III)L, R, LR BARRICADE
- EXISTING TRAFFIC SIGNAL

GENERAL NOTES:

1. NB TRAFFIC TO BE DETOURED DURING STAGE 1, SEE SHEET 2C-4.
2. ALL SIGNS SHALL BE TYPE "04" UNLESS OTHERWISE NOTED.

REGISTERED PROFESSIONAL ENGINEER 18,503 OREGON JULY 10, 1996 BRIAN K. COPELAND

EXPIRES: DEC. 31, 2015

OREGON DEPARTMENT OF TRANSPORTATION

DKS 720 SW Washington Street, Suite 500 Portland, Oregon 97205 (503) 243-3500 www.dksassociates.com

17TH AVE TRAIL: SE OCHOCO - SE MCLOUGHLIN

CITY OF MILWAUKIE

CLACKAMAS COUNTY

DESIGNED BY: K. Svicarovich
REVIEWED BY: B. Copeland
DRAWN BY: M. Zarkas
FC: N/A MP: N/A

TRAFFIC CONTROL DETAILS

CITY OF MILWAUKIE DWG. NO.

TSSU NO. T.R.S. DWG. NO. 2C-3

X:\Projects\2014\P14081-000 (Milwaukie 17th Av Trail)\ACAD\ 2C-3.dwg

DETOUR

STAGE 1: SE 17th Ave NB Lane Closures

49V-026

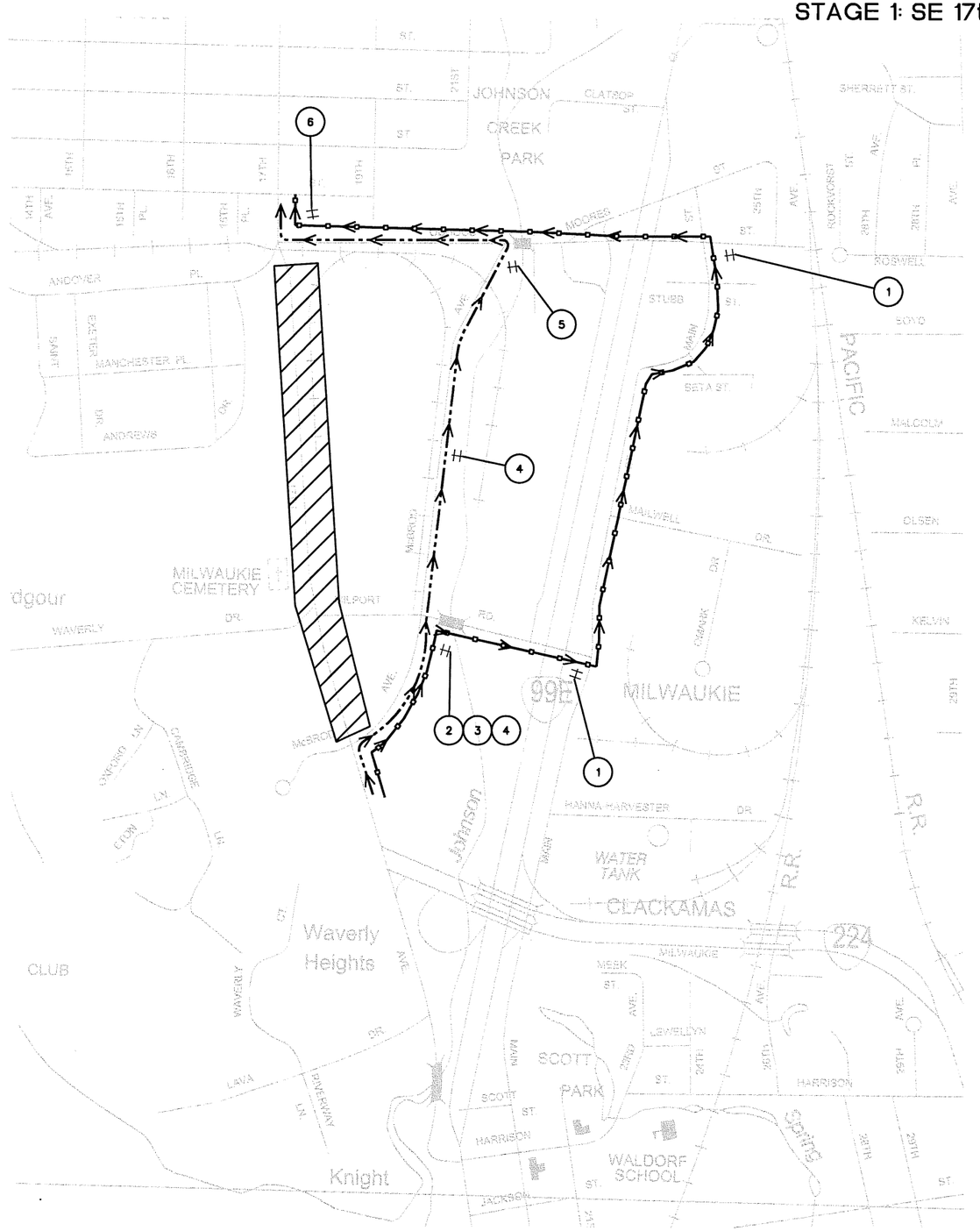

N

SIGN NO. 1	SIGN NO. 2	SIGN NO. 3
42"x12" 6"C 17th Av NB / DETOUR ← M4-9L 30"x24"	42"x12" 6"C 17th Av NB / DETOUR → M4-9R 30"x24"	42"x12" 6"C Waverly Dr ← M6-1R 21"x15" TYPE "W1"

SIGN NO. 4	SIGN NO. 5	SIGN NO. 6
DETOUR ↑ M4-9C MOD. 30"x30"	DETOUR ← M4-9C 30"x24"	END DETOUR CG20-5 30"x24"

LEGEND

- STAGE 1 NB DETOUR ROUTE (BIKES)
- STAGE 1 NB DETOUR ROUTE (VEHICLES)
- STAGE 1 CONSTRUCTION (NB LANE CLOSURE)
- ‡ TEMPORARY SIGN ON TSS
- 8' B(III)L, R, LR BARRICADE
- PORTABLE CHANGEABLE MESSAGE SIGN (PCMS)

NOTES

1. SEE SHEETS 2C THROUGH 2C-3 FOR TEMPORARY TRAFFIC CONTROL DETAILS.
2. ALL SIGNS SHALL BE TYPE "04" UNLESS OTHERWISE NOTED.

REGISTERED PROFESSIONAL ENGINEER 18,503 OREGON JULY 10, 1996 BRIAN K. COPELAND

EXPIRES: DEC. 31, 2015

OREGON DEPARTMENT OF TRANSPORTATION

DKS 720 SW Washington Street, Suite 500 Portland, Oregon 97205 (503) 243-3500 www.dksassociates.com

17TH AVE TRAIL: SE OCHOCO - SE MCLOUGHLIN

CITY OF MILWAUKIE

CLACKAMAS COUNTY

DESIGNED BY: K. Svicarovich
REVIEWED BY: B. Copeland
DRAWN BY: M. Zarkas
FC: N/A MP: N/A

DETOUR PLAN

CITY OF MILWAUKIE DWG. NO. _____

TSSU NO. _____ T.R.S. DWG. NO. 2C-4

X:\Projects\2014\P14081-000 (Milwaukie 17th Av Trail)\ACAD\ 2C-4.dwg

STAGE 2 :
SE 17th Ave SB Shoulder Closure

49V-026

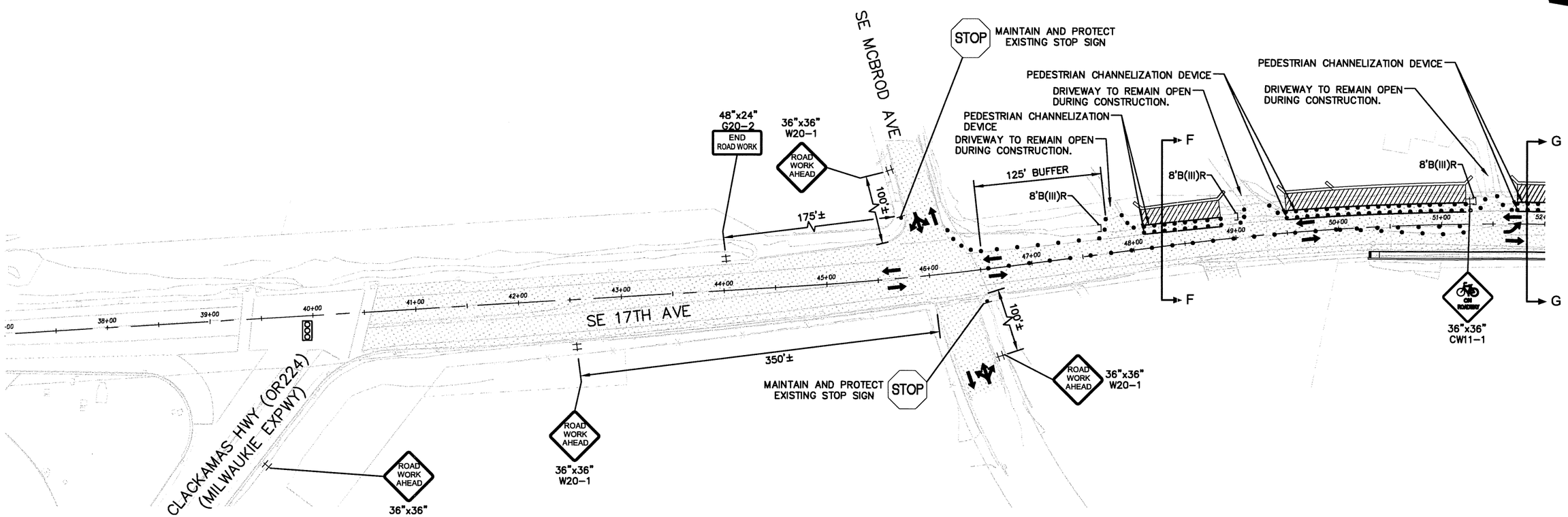

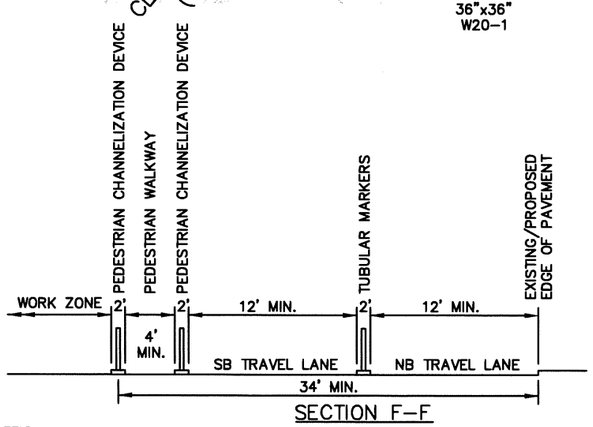

SECTION F–F
STAGE 2
(NOT TO SCALE)

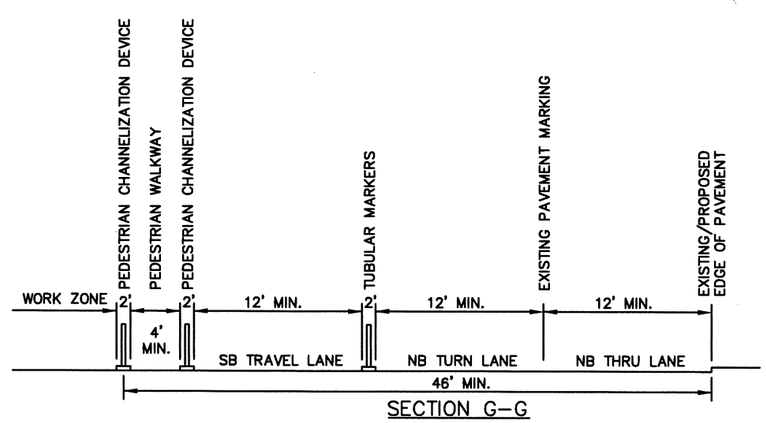

SECTION G–G
STAGE 2
(NOT TO SCALE)

LEGEND

- UNDER TRAFFIC
- UNDER CONSTRUCTION
- 28" TUBULAR MARKERS ON 20' MAX SPACING (10' MAX SPACING FOR TAPERS AND TRANSITIONS TO SIDE STREETS).
- PEDESTRIAN CHANNELIZATION DEVICE
- DIRECTION OF TRAFFIC
- TEMPORARY SIGN SUPPORT
- 8' B(III)L, R, LR BARRICADE
- EXISTING TRAFFIC SIGNAL

GENERAL NOTES:

1. ALL SIGNS SHALL BE TYPE "04" UNLESS OTHERWISE NOTED.

REGISTERED PROFESSIONAL ENGINEER 18,503 OREGON JULY 10, 1996 BRIAN K. COPELAND

EXPIRES: DEC. 31, 2015

OREGON DEPARTMENT OF TRANSPORTATION

DKS 720 SW Washington Street, Suite 500 Portland, Oregon 97205 (503) 243-3500 www.dksassociates.com

17TH AVE TRAIL: SE OCHOCO - SE MCLOUGHLIN

CITY OF MILWAUKIE

CLACKAMAS COUNTY

DESIGNED BY: K. Svicarovich
REVIEWED BY: B. Copeland
DRAWN BY: M. Zarkas
FC: N/A MP: N/A

TRAFFIC CONTROL DETAILS

CITY OF MILWAUKIE DWG. NO.

TSSU NO. T.R.S. DWG. NO. 2C-5

X:\Projects\2014\P14081-000 (Milwaukie 17th Av Trail)\ACAD\ 2C-5.dwg

49V-026

STAGE 2 :
SE 17th Ave SB Shoulder Closure

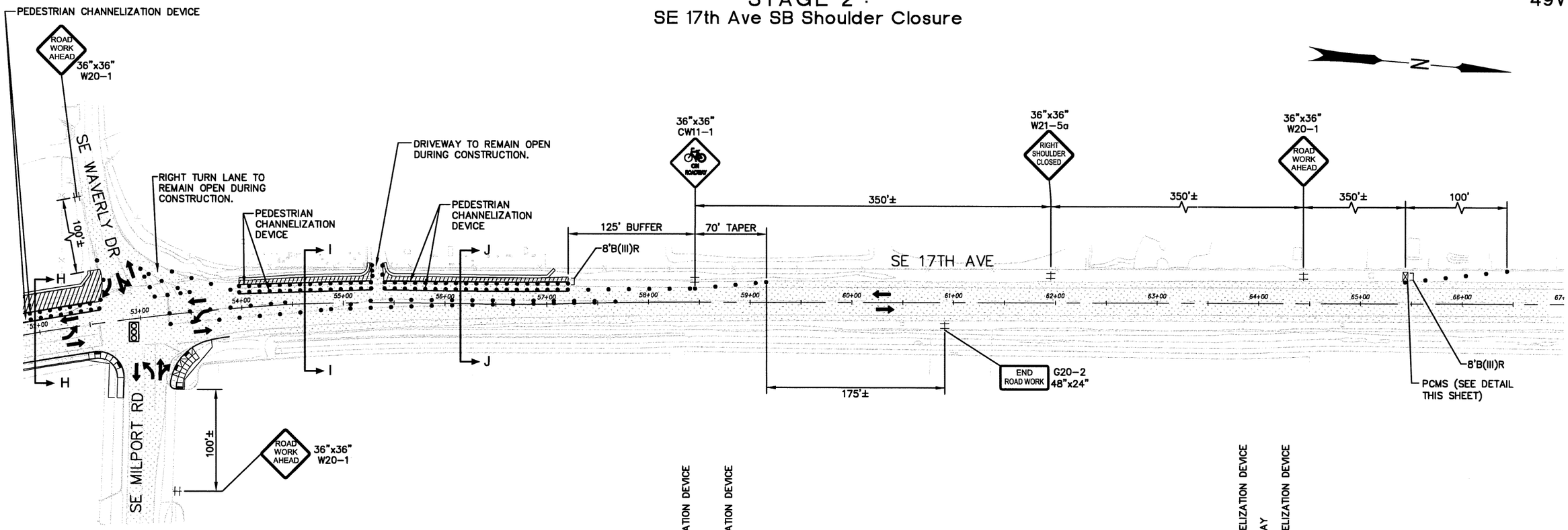

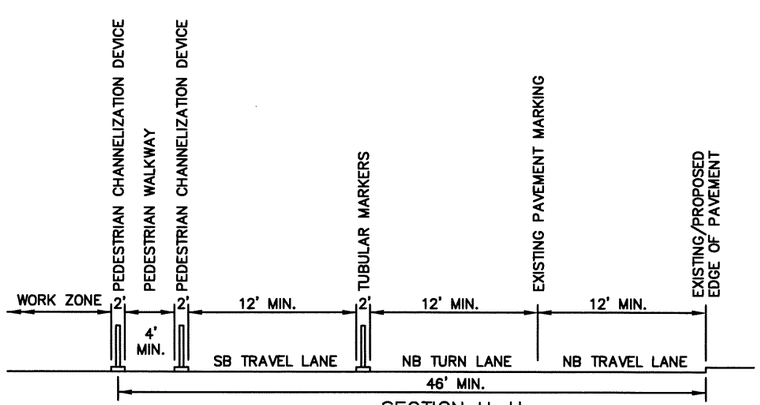

SECTION H–H
STAGE 2
(NOT TO SCALE)

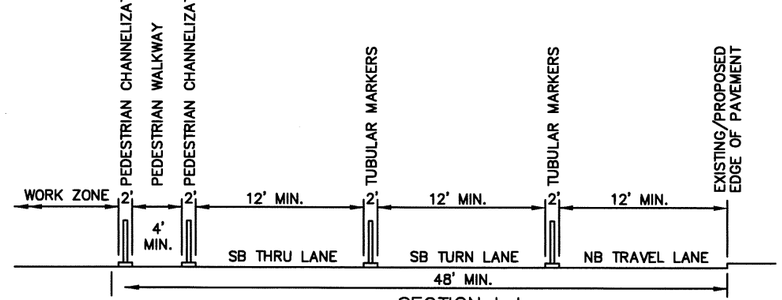

SECTION I–I
STAGE 2
(NOT TO SCALE)

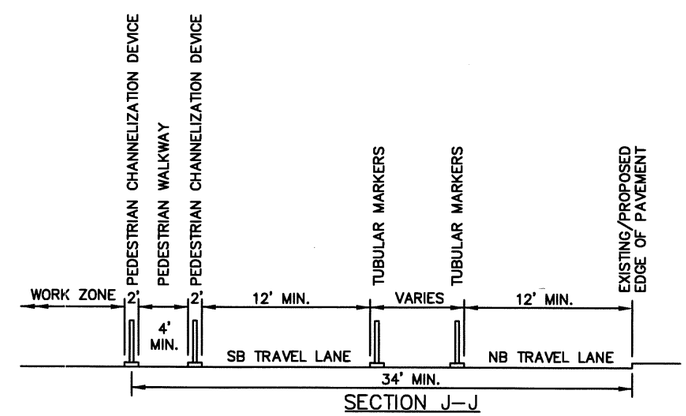

SECTION J–J
STAGE 2
(NOT TO SCALE)

LEGEND

- UNDER TRAFFIC
- UNDER CONSTRUCTION
- 28" TUBULAR MARKERS ON 20' MAX SPACING (10' MAX SPACING FOR TAPERS AND TRANSITIONS TO SIDE STREETS).
- PEDESTRIAN CHANNELIZATION DEVICE
- DIRECTION OF TRAFFIC
- TEMPORARY SIGN SUPPORT
- 8' B(III)L, R, LR BARRICADE
- PORTABLE CHANGEABLE MESSAGE SIGN (PCMS)
- EXISTING TRAFFIC SIGNAL

GENERAL NOTES:

1. ALL SIGNS SHALL BE TYPE "04" UNLESS OTHERWISE NOTED.

RIGHT SHOULDER CLOSED	USE CAUTION

PORTABLE CHANGEABLE MESSAGE SIGN
(SUGGESTED MESSAGE)
(LOCATE AS DIRECTED)

REGISTERED PROFESSIONAL ENGINEER 18,503 OREGON JULY 10, 1996 BRIAN K. COPELAND

EXPIRES: DEC. 31, 2015

OREGON DEPARTMENT OF TRANSPORTATION

DKS 720 SW Washington Street, Suite 500 Portland, Oregon 97205 (503) 243-3500 www.dksassociates.com

17TH AVE TRAIL: SE OCHOCO - SE MCLOUGHLIN

CITY OF MILWAUKIE

CLACKAMAS COUNTY

DESIGNED BY: K. Svicarovich
REVIEWED BY: B. Copeland
DRAWN BY: M. Zarkas
FC: N/A MP: N/A

TRAFFIC CONTROL DETAILS

CITY OF MILWAUKIE DWG. NO.

TSSU NO. T.R.S. DWG. NO. 2C–6

X:\Projects\2014\P14081-000 (Milwaukie 17th Av Trail)\ACAD\ 2C-6.dwg

49V-026

STAGE 3 :
SE 17th Ave SB Closure

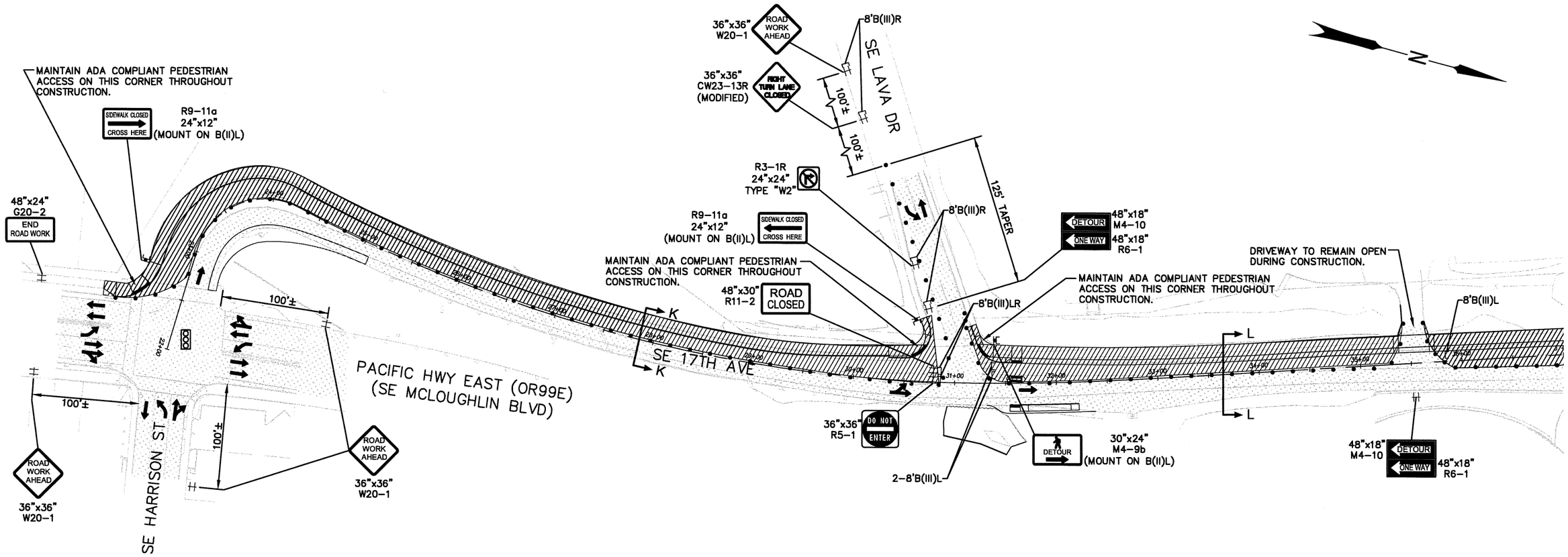

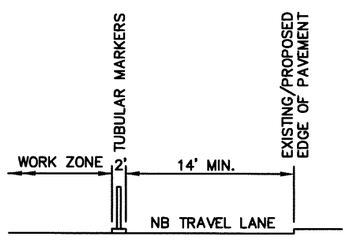

SECTION K-K
STAGE 3
(NOT TO SCALE)

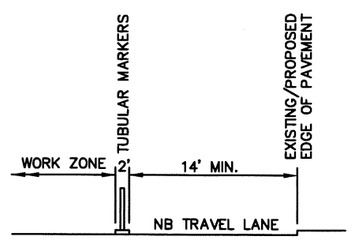

SECTION L-L
STAGE 3
(NOT TO SCALE)

LEGEND

- UNDER TRAFFIC
- UNDER CONSTRUCTION
- 28" TUBULAR MARKERS ON 20' MAX SPACING (10' MAX SPACING FOR TAPERS AND TRANSITIONS TO SIDE STREETS).
- DIRECTION OF TRAFFIC
- TEMPORARY SIGN SUPPORT
- 8' B(III)L, R, LR BARRICADE
- TEMPORARY SIGN ON 4' B(II)(R, L, OR LR BARRICADE)
- EXISTING TRAFFIC SIGNAL

GENERAL NOTES:

1. SB TRAFFIC TO BE DETOURED DURING STAGE 3, SEE SHEET 2C-10.
2. CONTACT ODOT REGION 1 SIGNAL MANAGER TO ADJUST SIGNAL TIMING FOR THE INTERSECTION OF SE 17TH AVE/ SE HARRISON ST AT OR99E.
3. ALL SIGNS SHALL BE TYPE "04" UNLESS OTHERWISE NOTED.

REGISTERED PROFESSIONAL ENGINEER 18,503 OREGON JULY 10, 1996 BRIAN K. COPELAND

EXPIRES: DEC. 31, 2015

OREGON DEPARTMENT OF TRANSPORTATION

DKS 720 SW Washington Street, Suite 500 Portland, Oregon 97205 (503) 243-3500 www.dksassociates.com

17TH AVE TRAIL: SE OCHOCO - SE MCLOUGHLIN

CITY OF MILWAUKIE

CLACKAMAS COUNTY

DESIGNED BY: K. Svicarovich
REVIEWED BY: B. Copeland
DRAWN BY: M. Zarkas
FC: N/A MP: N/A

TRAFFIC CONTROL DETAILS

CITY OF MILWAUKIE DWG. NO.

TSSU NO. T.R.S. DWG. NO. 2C-7

X:\Projects\2014\P14081-000 (Milwaukie 17th Av Trail)\ACAD\ 2C-7.dwg

49V-026

STAGE 3 :
SE 17th Ave SB Closure

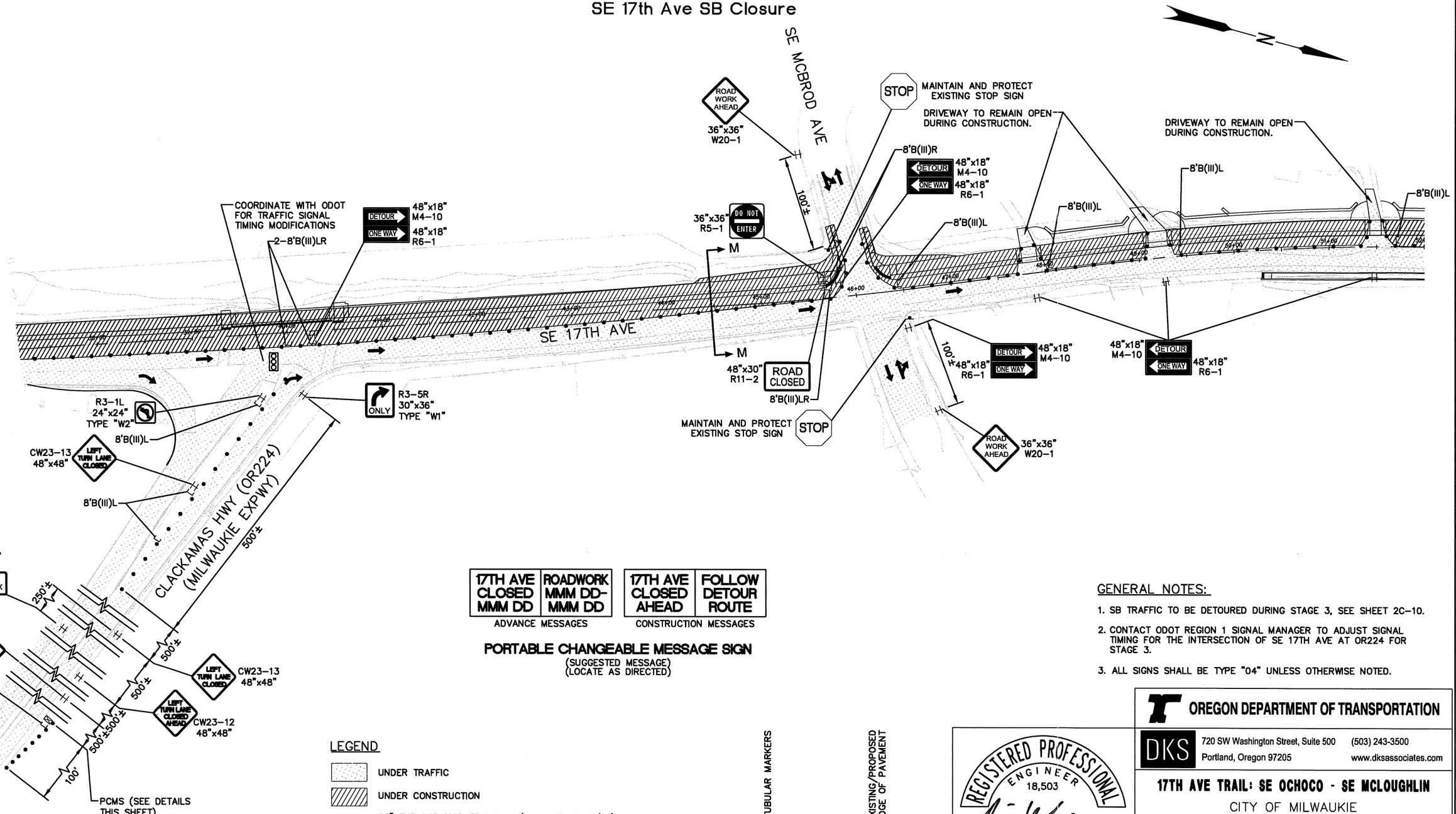

17TH AVE CLOSED MMM DD	ROADWORK MMM DD-MMM DD
ADVANCE MESSAGES	

17TH AVE CLOSED AHEAD	FOLLOW DETOUR ROUTE
CONSTRUCTION MESSAGES	

PORTABLE CHANGEABLE MESSAGE SIGN
(SUGGESTED MESSAGE)
(LOCATE AS DIRECTED)

GENERAL NOTES:

1. SB TRAFFIC TO BE DETOURED DURING STAGE 3, SEE SHEET 2C-10.
2. CONTACT ODOT REGION 1 SIGNAL MANAGER TO ADJUST SIGNAL TIMING FOR THE INTERSECTION OF SE 17TH AVE AT OR224 FOR STAGE 3.
3. ALL SIGNS SHALL BE TYPE "04" UNLESS OTHERWISE NOTED.

LEGEND

- UNDER TRAFFIC
- UNDER CONSTRUCTION
- 28" TUBULAR MARKERS ON 20' MAX SPACING (10' MAX SPACING FOR TAPERS AND TRANSITIONS TO SIDE STREETS).
- DIRECTION OF TRAFFIC
- TEMPORARY SIGN SUPPORT
- 8' B(III)L, R, LR BARRICADE
- PORTABLE CHANGEABLE MESSAGE SIGN (PCMS)
- EXISTING TRAFFIC SIGNAL

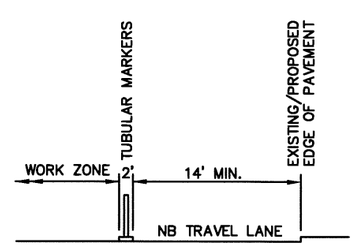

SECTION M-M
STAGE 3
(NOT TO SCALE)

REGISTERED PROFESSIONAL ENGINEER 18,503 OREGON JULY 10, 1996 BRIAN K. COPELAND
EXPIRES: DEC. 31, 2015

OREGON DEPARTMENT OF TRANSPORTATION

DKS 720 SW Washington Street, Suite 500 Portland, Oregon 97205 (503) 243-3500 www.dksassociates.com

17TH AVE TRAIL: SE OCHOCO - SE MCLOUGHLIN
CITY OF MILWAUKIE
CLACKAMAS COUNTY

DESIGNED BY: K. Svicarovich
REVIEWED BY: B. Copeland
DRAWN BY: M. Zarkas
FC: N/A MP: N/A

TRAFFIC CONTROL DETAILS

CITY OF MILWAUKIE DWG. NO.
TSSU NO. T.R.S. DWG. NO. 2C-8

X:\Projects\2014\P14081-000 (Milwaukie 17th Av Trail)\ACAD\ 2C-8.dwg

STAGE 3 :
SE 17th Ave SB Lane Closure

49V-026

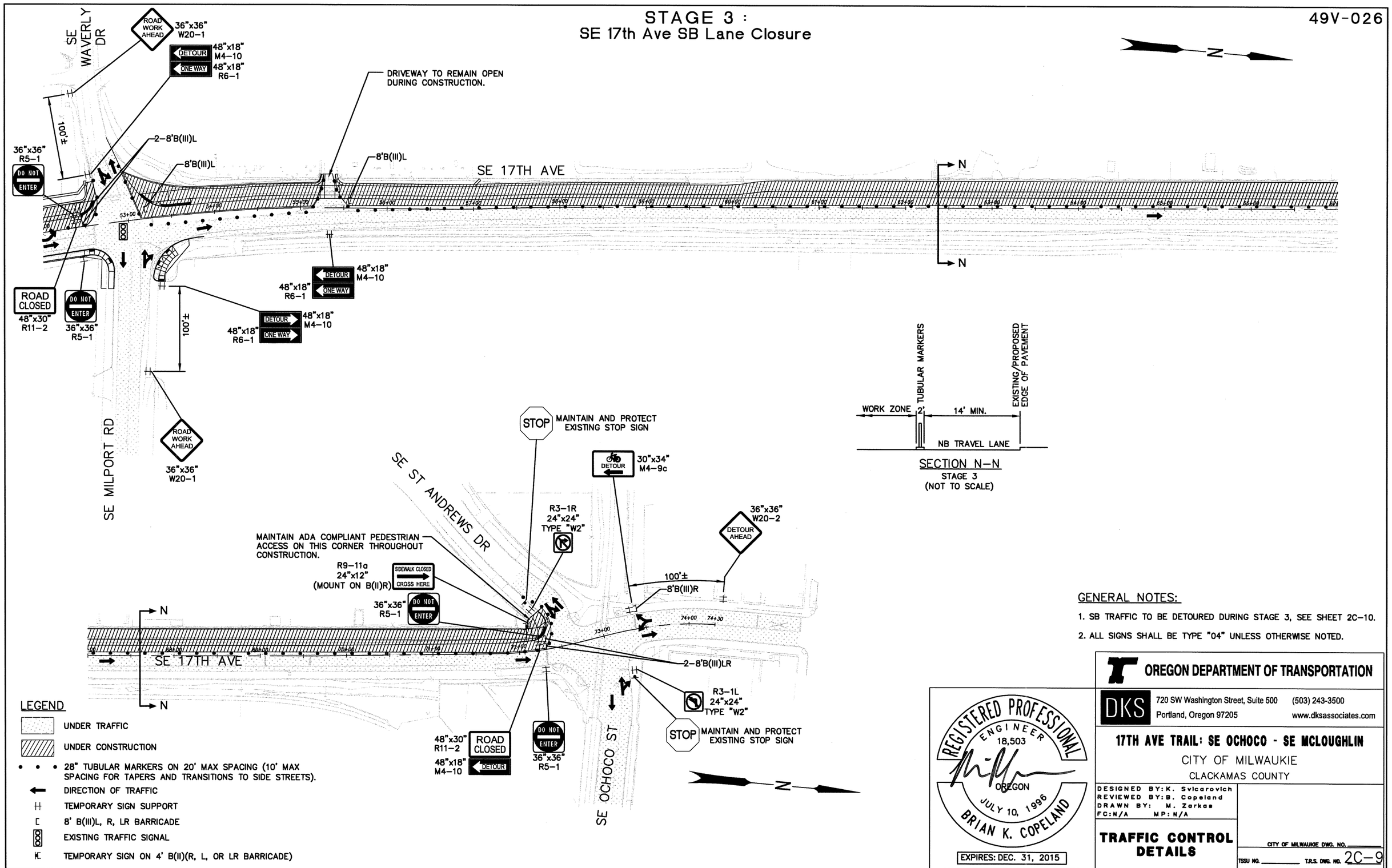

GENERAL NOTES:

1. SB TRAFFIC TO BE DETOURED DURING STAGE 3, SEE SHEET 2C-10.
2. ALL SIGNS SHALL BE TYPE "04" UNLESS OTHERWISE NOTED.

REGISTERED PROFESSIONAL ENGINEER 18,503 OREGON JULY 10, 1996 BRIAN K. COPELAND

EXPIRES: DEC. 31, 2015

OREGON DEPARTMENT OF TRANSPORTATION

DKS 720 SW Washington Street, Suite 500 Portland, Oregon 97205 (503) 243-3500 www.dksassociates.com

17TH AVE TRAIL: SE OCHOCO - SE MCLOUGHLIN

CITY OF MILWAUKIE

CLACKAMAS COUNTY

DESIGNED BY: K. Svicarovich
REVIEWED BY: B. Copeland
DRAWN BY: M. Zarkas
FC: N/A MP: N/A

TRAFFIC CONTROL DETAILS

CITY OF MILWAUKIE DWG. NO.

TSSU NO. T.R.S. DWG. NO. 2C-9

X:\Projects\2014\P14081-000 (Milwaukie 17th Av Trail)\ACAD\ 2C-9.dwg

DETOUR

STAGE 3: SE 17th Ave SB Lane Closures

49V-026

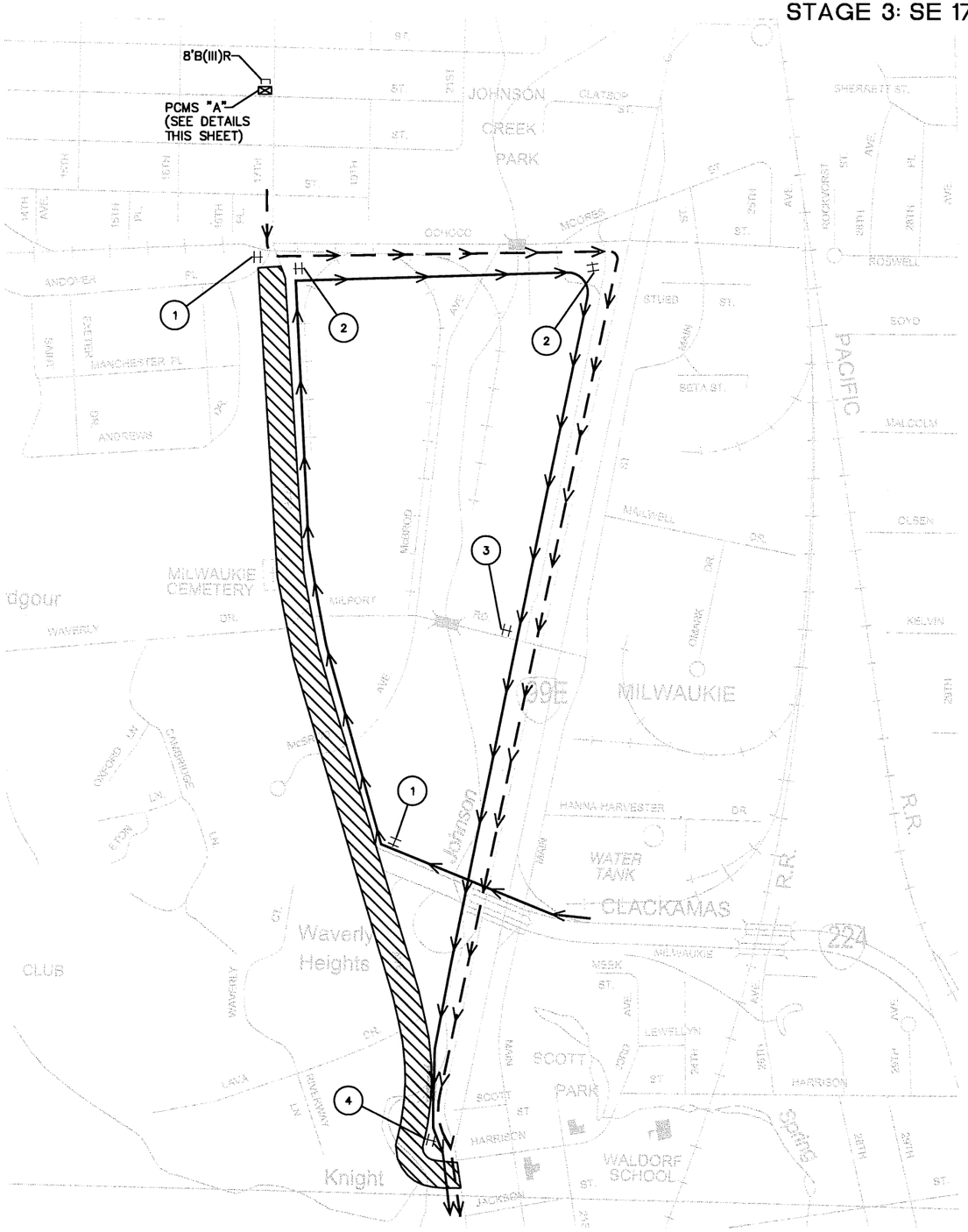

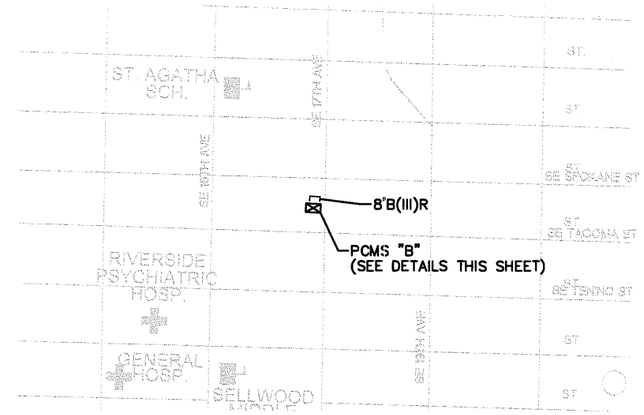

N

17TH AVE CLOSED MMM DD	ROADWORK MMM DD-MMM DD
ADVANCE MESSAGES	

17TH AVE CLOSED AHEAD	FOLLOW DETOUR ROUTE
CONSTRUCTION MESSAGES	

PORTABLE CHANGEABLE MESSAGE SIGN "A"
(SUGGESTED MESSAGE)
(LOCATE AS DIRECTED)

ROAD CLOSED AHEAD	DETOUR TO 99E

PORTABLE CHANGEABLE MESSAGE SIGN "B"
(SUGGESTED MESSAGE)
(LOCATE AS DIRECTED)

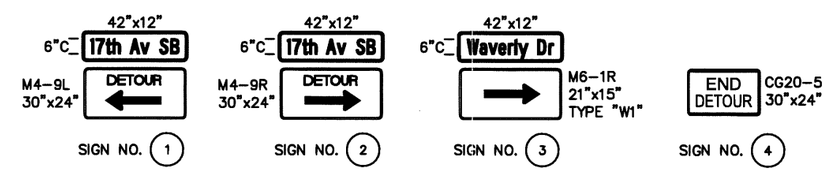

LEGEND

- STAGE 3 SB DETOUR ROUTE (VEHICLES AND BIKES)
- STAGE 3 SB FROM OR224 DETOUR ROUTE
- STAGE 3 CONSTRUCTION (WEST SIDE OF SE 17TH AVENUE)
- TEMPORARY SIGN ON TSS
- 8' B(III)L, R, LR BARRICADE
- PORTABLE CHANGEABLE MESSAGE SIGN (PCMS)

NOTES

1. SEE SHEETS 2C-7 THROUGH 2C-9 FOR TEMPORARY TRAFFIC CONTROL DETAILS.
2. ALL SIGNS SHALL BE TYPE "04" UNLESS OTHERWISE NOTED.

REGISTERED PROFESSIONAL ENGINEER 18,503 OREGON JULY 10, 1996 BRIAN K. COPELAND

EXPIRES: DEC. 31, 2015

OREGON DEPARTMENT OF TRANSPORTATION

DKS 720 SW Washington Street, Suite 500 Portland, Oregon 97205 (503) 243-3500 www.dksassociates.com

17TH AVE TRAIL: SE OCHOCO - SE MCLOUGHLIN

CITY OF MILWAUKIE

CLACKAMAS COUNTY

DESIGNED BY: K. Svicarovich
REVIEWED BY: B. Copeland
DRAWN BY: M. Zarkas
FC: N/A MP: N/A

DETOUR PLAN

CITY OF MILWAUKIE DWG. NO.

TSSU NO. T.R.S. DWG. NO. 2C-10

X:\Projects\2014\P14081-000 (Milwaukie 17th Av Trail)\ACAD\ 2C-10.dwg

P:\MWK (City of Milwaukie)\MWK-24 (17TH Ave Trail)\MWK24-DWGS\SHEETS\ MWK24-2D.dwg

PIPE 2008 - File Update: Jul. 2011

SHEET NUMBER	NOTE No. ON PLANS	DESIGN HEIGHT OF COVER ① (FEET)	PIPE – CIRCULAR OR ELLIPTICAL, SIZE IN (Inches) 3 – LENGTH IN FEET	4	12	STORM SEWER	WATERTIGHT JOINTS	RIGID – PRE-CAST CONCRETE REINF. V	PLASTIC & IRON – PVC	POLYPROPYLENE	DUCTILE IRON	MANHOLES – DEPTH, TOP OF COVER TO INVERT (Feet)	DIAMETER OF LARGEST PIPE IN BASE (In.)	CONC. PRECAST	INLETS – G-2	G-2 FLOW THROUGH	CURB INLET	AREA DRAIN	REMARKS
3B	1					✓	✓					4.6	12	1					Conn. to extg. storm
	2					✓	✓								1				
	3	0.5			74.0	✓	✓	✓			✓								
	4					✓	✓								1				
	5	1.5			40.8	✓	✓		✓	✓	✓								
4B	1					✓	✓										1		Conn. to extg. storm
	2	1.7			3.3	✓	✓		✓	✓	✓								Conn. to extg. storm
	3	0.4			99.6	✓	✓				✓						1		
5B	1					✓	✓										1		
	6	0.8			56.5	✓	✓	✓			✓					1			
	7					✓	✓											1	
	8	0.8			16.4	✓	✓	✓			✓								Conn. to extg. manhole
	13	0.0	4.0			✓	✓		✓										Weep hole pipe
6B	1	2.1			50.0	✓	✓		✓	✓	✓							1	
	2					✓	✓											1	
	3					✓	✓								1				Conn. to extg. storm
	4	2.1			139.9	✓	✓		✓	✓	✓							1	
7B	2					✓	✓											1	
8B	1	1.3			80.0	✓	✓		✓	✓	✓							1	
	2					✓	✓											1	
	3					✓	✓								1				Conn. to extg. storm
	4	0.6			48.0	✓	✓	✓			✓							1	
	5					✓	✓											1	
	6	0.6			52.0	✓	✓	✓			✓							1	
	7					✓	✓											1	
	8					✓	✓										1		Conn. to extg. storm
9B	1	0.3			44.0	✓	✓				✓							1	
	2					✓	✓											1	
	3	0.3			138.2	✓	✓				✓							1	
	4	0.2		25.9		✓	✓				✓							1	
10B	1	2.0			32.0	✓	✓		✓	✓	✓							1	
	2	0.2		12.5		✓	✓				✓							1	
13B	1					✓	✓								1				Conn. to extg. storm

GENERAL NOTES:

1. A check (✓) indicates column heading applies.
2. A new pipe culvert installation shall be of like material throughout.
3. Extension of existing metal culverts may be of unlike metal or corrugations. For connecting details, see Std Drg. No. RD326.
4. Dimensions shown are nominal.
5. All pipes shall conform to the AASHTO specification applicable for the type of material and the diameter of the pipe involved.

FOOTNOTES:

① Design height of cover is the critical design height used to select pipe materials. The height of cover for any given run of pipe may vary. Design height of cover shall be measured to subgrade.

② Cross-sectional dimensions may vary with different materials. When galvanized iron or steel and aluminum are acceptable alternates use a separate line for each type of material.

③ Cross-sectional shape of pipe normal to longitudinal axis, prior to loading
A = Pipe - Arch
R = Round
E = Elliptical (5% nominal elongation)

④ Minimum allowable diameter for Class 1 non-reinforced concrete pipe is 15".

⑤ Abbreviations for protective coatings for metal pipe
PM = Polymeric, 10 Mil. thkn. coated both sides
PO = Polyethylene inside lining, polymeric outside
U = Uncoated
CIM = Chevron industrial membrane
Ep = Epoxy coated

⑥ Abbreviations for existing pipe materials
AB = Asbestos cement
Al = Corrugated aluminum
Co = Concrete
Pl = Plastic
St = Corrugated steel
X = Other material, see remarks column

- ■ RD300 Trench Backfill, Bedding, Pipe Zone And Multiple Installations
- ■ RD302 Street Cut
- □ RD304 Arch Pipe Backfill/Compaction
- ■ RD306 Concrete Encasement, Cradle, and Cap Details
- □ RD308 Bore Casing Detail
- □ RD310 Shallow/Deep Trench Service Connection, Blocking and Markers
- □ RD312 Subsurface Drain
- □ RD314 Open Grade HMAC Drainage Details
- □ RD316 Sloped Ends For Metal Pipe
- □ RD317 Culvert Embankment Protection
- □ RD318 Sloped Ends For Concrete Pipe
- □ RD319 Miscellaneous Culvert Details
- □ RD320 Paved End Slope For Culverts 60" Maximum Pipe Size
- □ RD321 Paved End Slope With Removable Safety Bar(s)
- □ RD322 Safety End Section For Metal Pipe
- □ RD324 Safety End Section For Concrete, PVC, HDPE & Polypropylene Pipe
- □ RD326 Coupling Bands For Corrugated Metal Pipe
- □ RD328 Slotted C.M.P. Drain Details
- □ RD330 Metal Pipe Slope Anchors
- □ RD332 Concrete Pipe Anchor Detail
- □ RD334 Locator Post
- ■ RD336 Standard Storm Sewer Manhole
- ■ RD339 Pipe to Structure Connection
- □ RD340 Storm Sewer Pollution Control Manhole
- □ RD342 Shallow Manholes
- ■ RD344 Standard Manhole Base Section
- ■ RD345 Pipe to Manhole Connection
- □ RD348 Manhole With Inlet
- □ RD350 Sanitary Sewer Piped Inside Drop Connection for Manholes
- □ RD352 Outside Drop Manholes
- □ RD354 Carry Through Manhole - Storm
- ■ RD356 Manhole Covers And Frames
- □ RD358 Manhole Slope Protectors
- ■ RD360 Manhole Frame Adjustment
- ■ RD363 Gutter Transition
- ■ RD364 Concrete Inlets Type G-1, G-2, G-2M, & G-2MA
- ■ RD365 Frames and Grates for Concrete Inlet
- □ RD368 Concrete Inlets Type M-E, M-O, B And B-SL
- □ RD370 Ditch Inlet Type D
- ■ RD371 Concrete Inlet Base Type CG-3
- ■ RD372 Concrete Inlet Top, Option 1 Type CG-3
- □ RD373 Concrete Inlet Top, Option 2 Type CG-3
- □ RD374 Area Drainage Basin Or Field Inlet
- □ RD376 Miscellaneous Drainage Structures Siphon Box, Inlet Cap & Inlet Adjustment
- □ RD378 Type "3" Catch Basin, Frame and Grate
- □ RD380 Fill Height Tables For Aluminum & Steel Corrugated Pipe
- □ RD382 Fill Height Tables For Aluminum & Steel Arch Pipe
- □ RD384 Fill Height Tables For Aluminum & Steel Spiral Rib Pipe
- ■ RD386 Fill Height Table For Circular Concrete Pipe
- ■ RD388 Fill Height Tables For PVC Pipe
- □ RD390 Fill Height Table For Corrugated HDPE Pipe
- □ RD391 Fill Height Table For Steel Reinforced HDPE Pipe
- ■ RD393 Fill Height Tables For Polypropylene Pipe

REGISTERED PROFESSIONAL ENGINEER
77,944
OREGON
JAN. 3, 2011
BEAU J. BRAMAN
EXPIRES: 12/31/2017

OREGON DEPARTMENT OF TRANSPORTATION

Harper Houf Peterson Righellis Inc.
ENGINEERS • PLANNERS • LANDSCAPE ARCHITECTS • SURVEYORS
205 SE Spokane Street, Suite 200 Portland, OR 97202 phone: 503.221.1131 www.hhpr.com fax: 503.221.1171

17TH AVE TRAIL: SE OCHOCO - SE MCLOUGHLIN
CITY OF MILWAUKIE
CLACKAMAS COUNTY

REVIEWED BY AJI
DESIGNED BY BJB
DRAFTED BY KJO

PIPE DATA SHEET

SHEET NO. 2D

49V-026

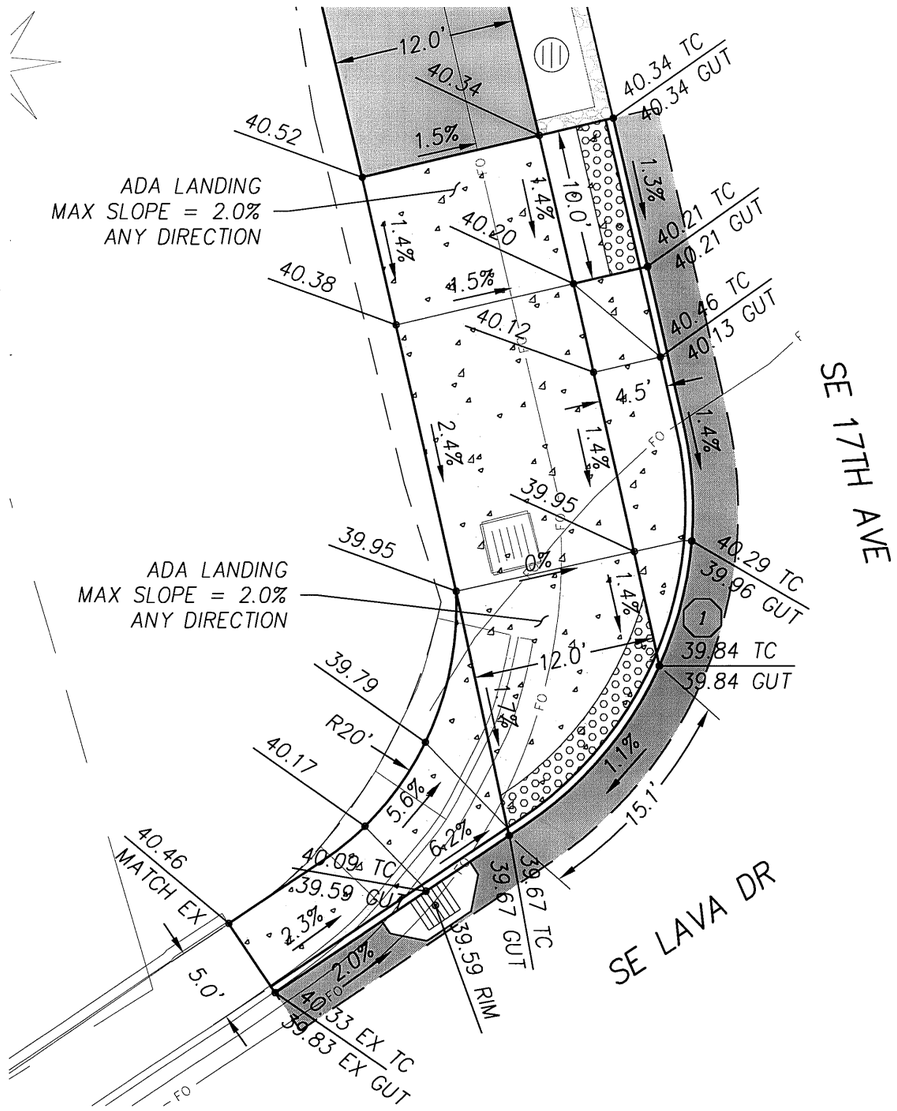

CURB RETURN GRADING DETAIL
NW CORNER OF 17TH AVE & LAVA DR
SCALE: 1"=10'

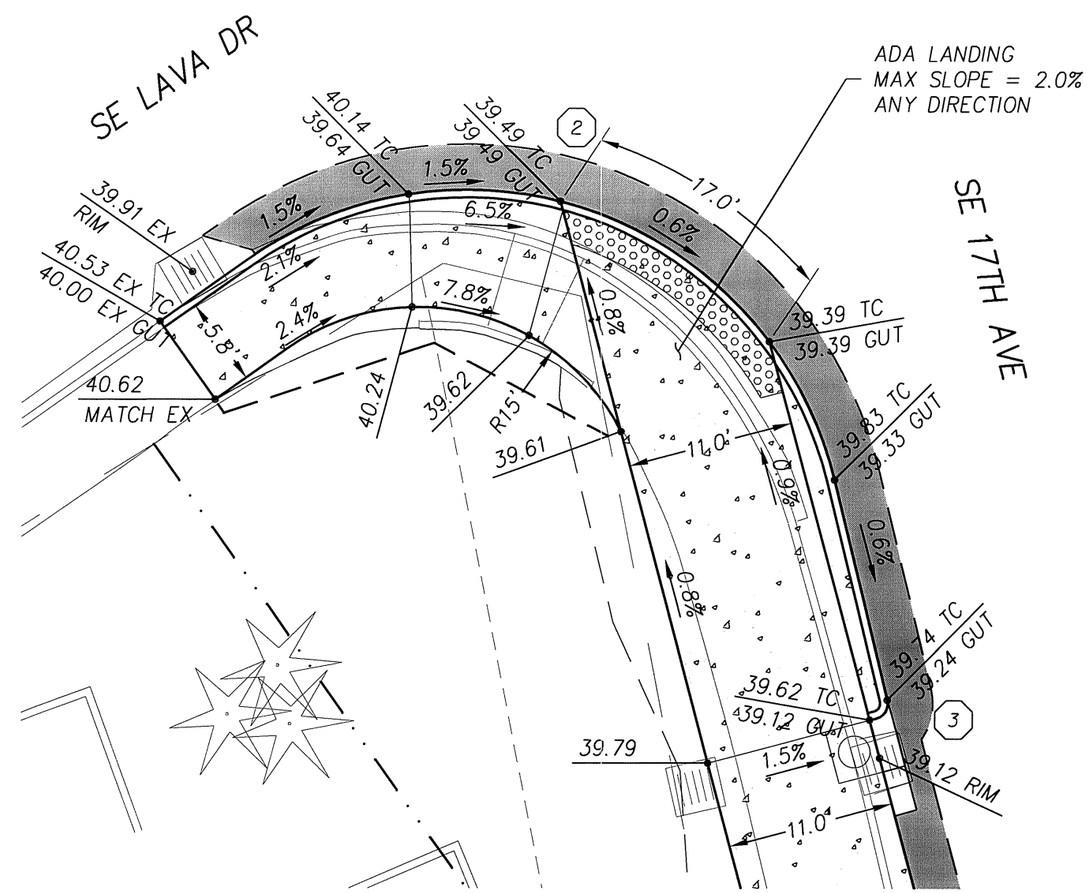

CURB RETURN GRADING DETAIL
SW CORNER OF 17TH AVE & LAVA DR
SCALE: 1"=10'

CURVE DATA

	Delta	Radius	Tangent	Length
1	68°54'50"	25.00'	17.15'	30.07'
2	111°42'35"	25.00'	36.86'	48.47'
3	90°25'47"	1.00'	1.01'	1.58'

GENERAL NOTE:
GRADING DETAILS ARE FOR ELEVATION AND GEOMETRY INFORMATION ONLY
SEE PLAN SHEETS FOR ITEMS TO BE CONSTRUCTED

REGISTERED PROFESSIONAL ENGINEER 69245 OREGON JULY 09, 2002 AARON J. ISENHART

EXPIRES: 06/30/2017

OREGON DEPARTMENT OF TRANSPORTATION

Harper Houf Peterson Righellis Inc.
ENGINEERS • PLANNERS • LANDSCAPE ARCHITECTS • SURVEYORS
205 SE Spokane Street, Suite 200 Portland, OR 97202 phone: 503.221.1131 www.hhpr.com fax: 503.221.1171

17TH AVE TRAIL: SE OCHOCO - SE MCLOUGHLIN
CITY OF MILWAUKIE
CLACKAMAS COUNTY

REVIEWED BY AJI
DESIGNED BY KJO
DRAFTED BY KJO

CURB RETURN DETAILS

SHEET NO. 2E

P:\MWK (City of Milwaukie)\MWK-24 (17TH Ave Trail)\MWK24-DWGS\SHEETS\ MWK24-2E.dwg

49V-026

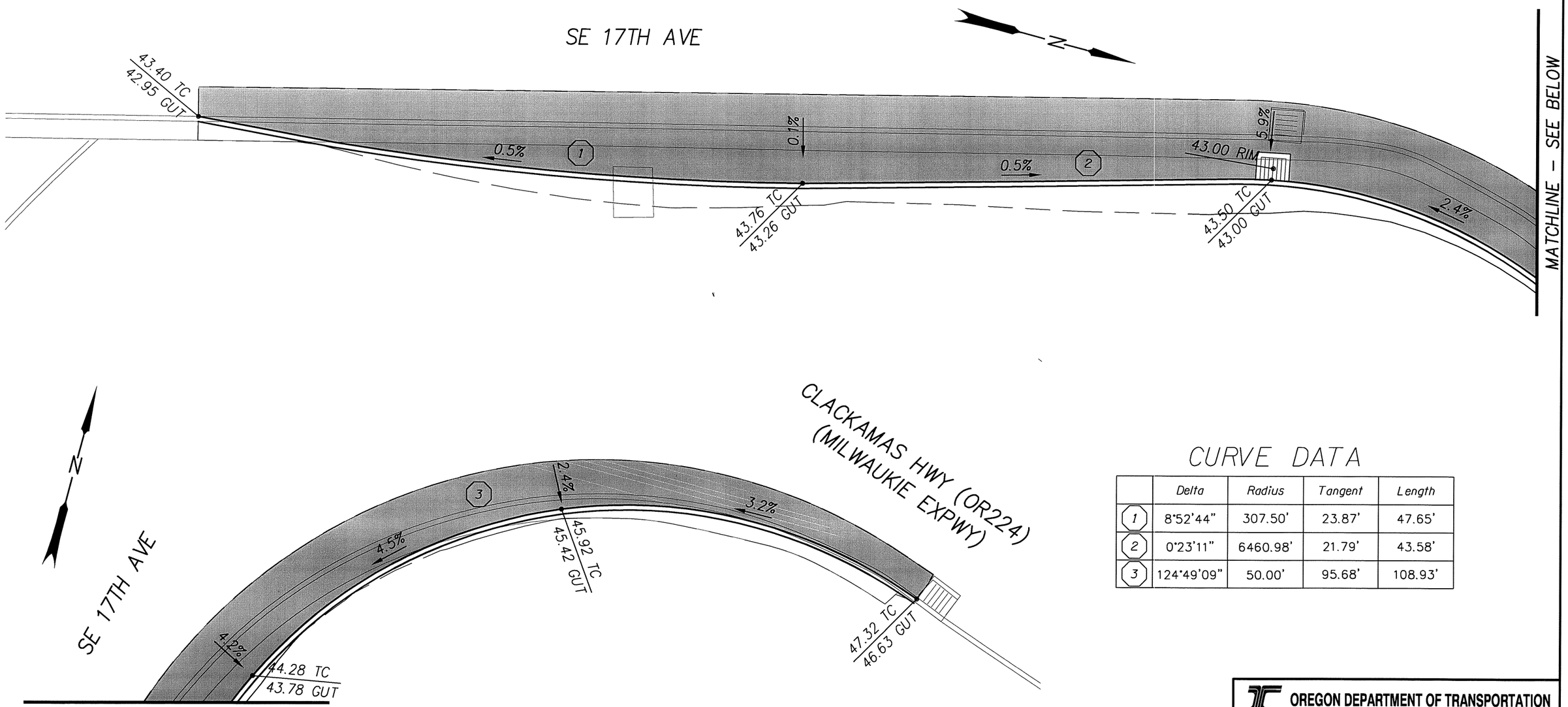

CURVE DATA

	Delta	Radius	Tangent	Length
1	8°52'44"	307.50'	23.87'	47.65'
2	0°23'11"	6460.98'	21.79'	43.58'
3	124°49'09"	50.00'	95.68'	108.93'

CURB RETURN GRADING DETAIL

SE CORNER OF 17TH AVE & MILWAUKIE EXPWY (OR224)

SCALE: 1"=10'

GENERAL NOTE:

GRADING DETAILS ARE FOR ELEVATION AND GEOMETRY INFORMATION ONLY
SEE PLAN SHEETS FOR ITEMS TO BE CONSTRUCTED

REGISTERED PROFESSIONAL ENGINEER 69245 OREGON JULY 09, 2002 AARON J. ISENHART

EXPIRES: 06/30/2017

OREGON DEPARTMENT OF TRANSPORTATION

Harper Houf Peterson Righellis Inc.
ENGINEERS • PLANNERS • LANDSCAPE ARCHITECTS • SURVEYORS
205 SE Spokane Street, Suite 200 Portland, OR 97202 phone: 503.221.1131 www.hhpr.com fax: 503.221.1171

17TH AVE TRAIL: SE OCHOCO - SE MCLOUGHLIN
CITY OF MILWAUKIE
CLACKAMAS COUNTY

REVIEWED BY AJI
DESIGNED BY KJO
DRAFTED BY KJO

CURB RETURN DETAILS

SHEET NO. 2E-2

P:\MWK (City of Milwaukie)\MWK-24 (17TH Ave Trail)\MWK24-DWGS\SHEETS\ MWK24-2E.dwg

49V-026

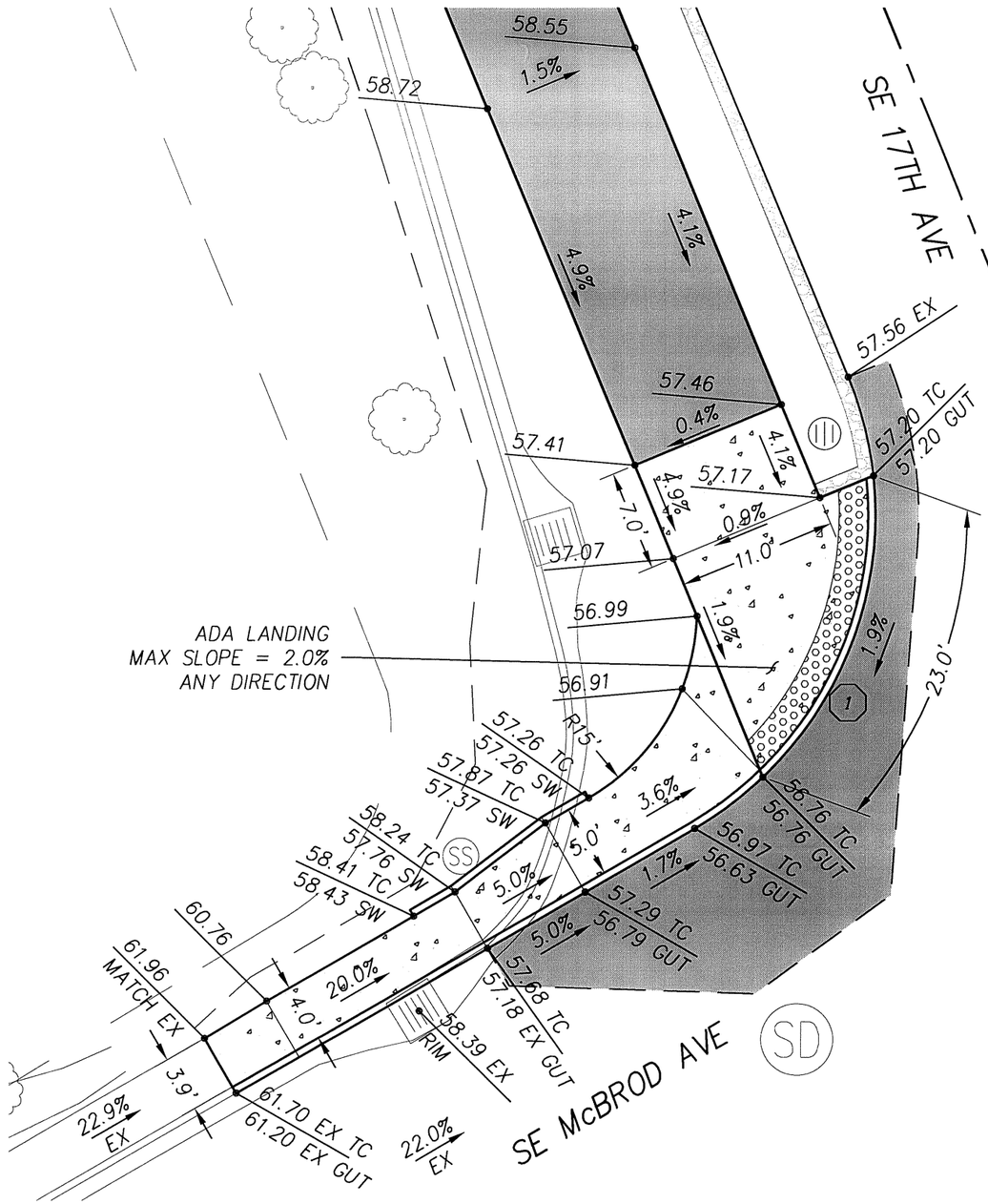

CURB RETURN GRADING DETAIL

SW CORNER OF 17TH AVE & McBROD AVE

SCALE: 1"=10'

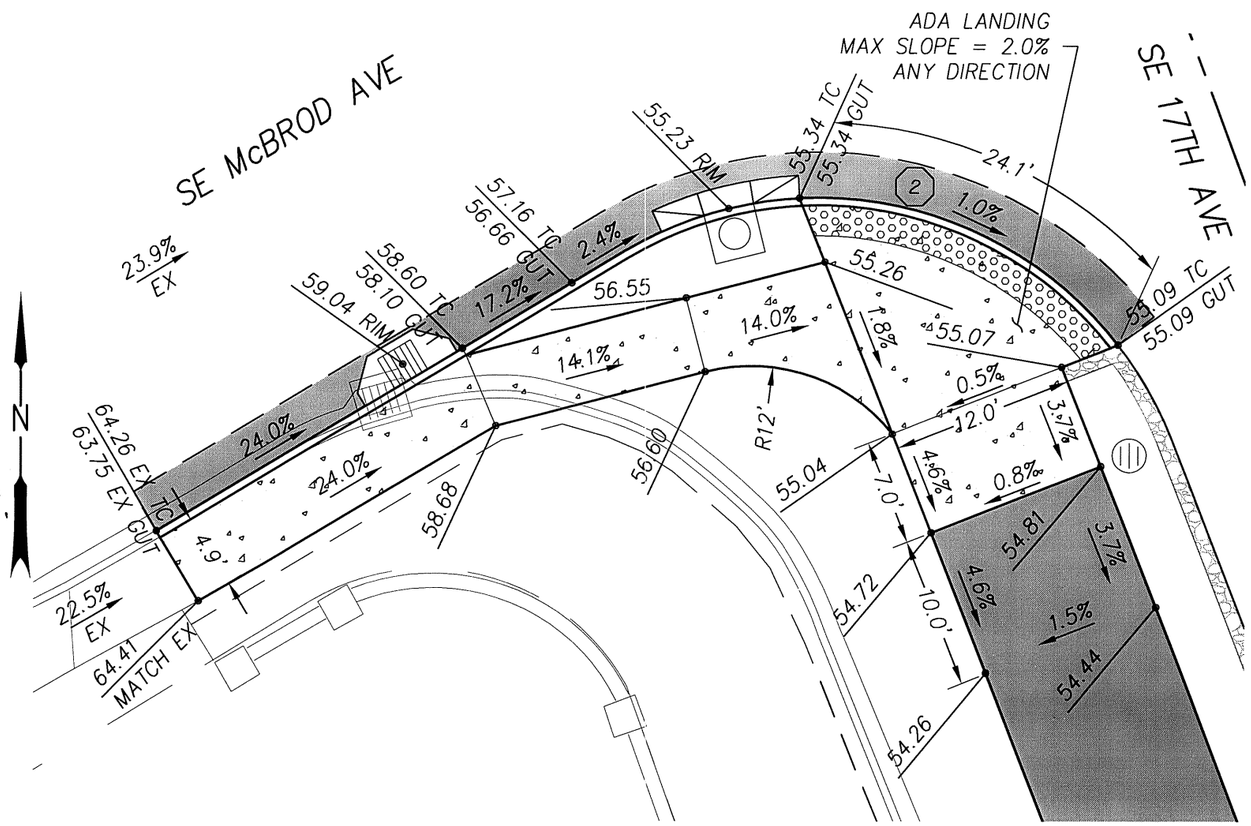

CURB RETURN GRADING DETAIL

SW CORNER OF 17TH AVE & McBROD AVE

SCALE: 1"=10'

CURVE DATA

	Delta	Radius	Tangent	Length
1	66°13'09"	25.00'	16.30'	28.89'
2	82°59'31"	25.00'	22.12'	36.21'

GENERAL NOTE:

GRADING DETAILS ARE FOR ELEVATION AND GEOMETRY INFORMATION ONLY
SEE PLAN SHEETS FOR ITEMS TO BE CONSTRUCTED

REGISTERED PROFESSIONAL ENGINEER 69245 OREGON JULY 09, 2002 AARON J. ISENHART

EXPIRES: 06/30/2017

OREGON DEPARTMENT OF TRANSPORTATION

Harper Houf Peterson Righellis Inc.
ENGINEERS • PLANNERS • LANDSCAPE ARCHITECTS • SURVEYORS
205 SE Spokane Street, Suite 200 Portland, OR 97202 phone: 503.221.1131 www.hhpr.com fax: 503.221.1171

17TH AVE TRAIL: SE OCHOCO - SE MCLOUGHLIN
CITY OF MILWAUKIE
CLACKAMAS COUNTY

REVIEWED BY AJI
DESIGNED BY KJO
DRAFTED BY KJO

CURB RETURN DETAILS

SHEET NO. 2E-3

P:\MWK (City of Milwaukie)\MWK-24 (17TH Ave Trail)\MWK24-DWGS\SHEETS\ MWK24-2E.dwg

49V-026

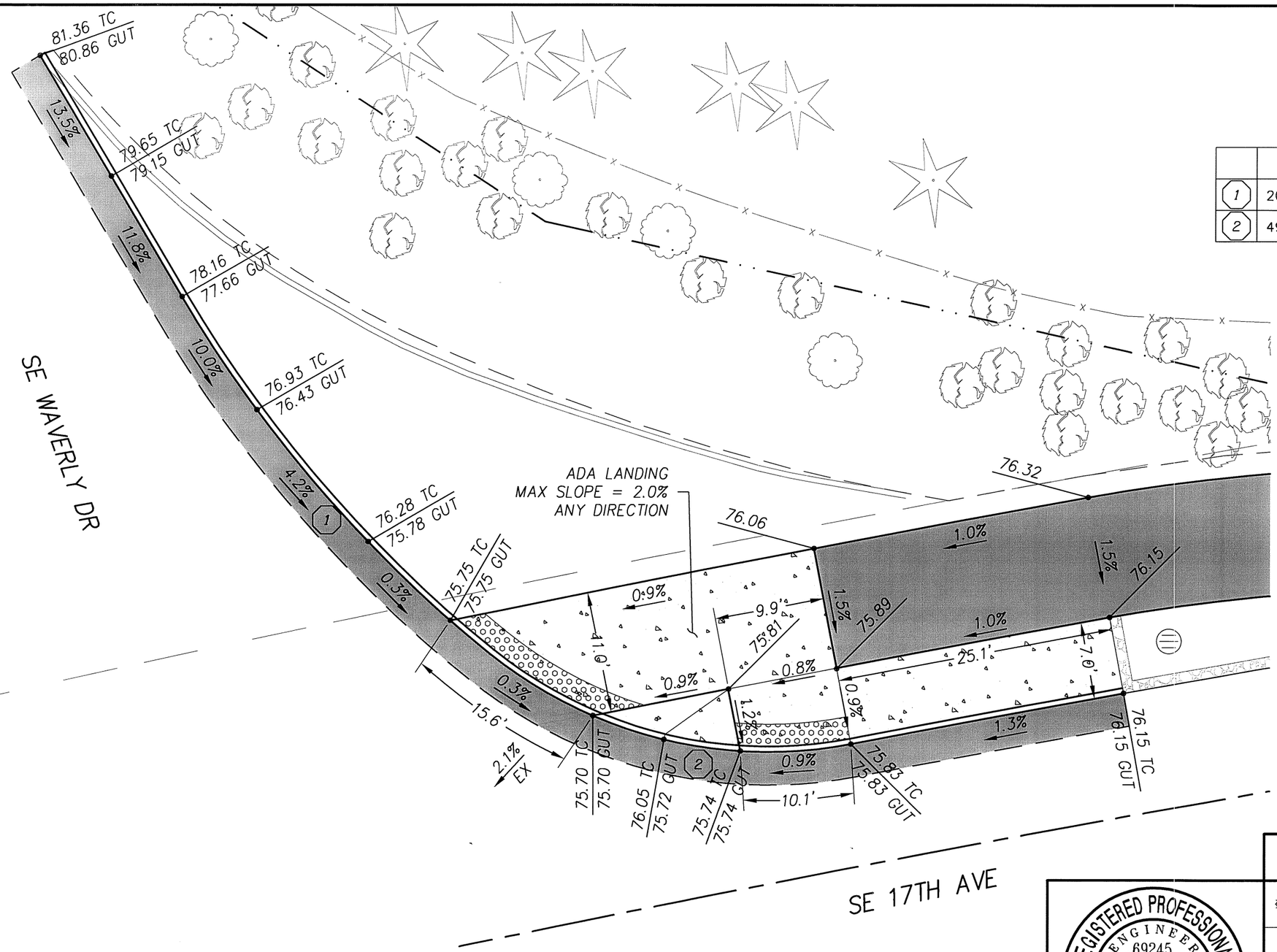

CURVE DATA

	Delta	Radius	Tangent	Length
1	20°26'54"	120.00'	21.64'	42.83'
2	49°44'25"	40.00'	18.54'	34.73'

N

CURB RETURN GRADING DETAIL

NW CORNER OF 17TH AVE & WAVERLY DR

SCALE: 1"=10'

GENERAL NOTE:

GRADING DETAILS ARE FOR ELEVATION AND GEOMETRY INFORMATION ONLY
SEE PLAN SHEETS FOR ITEMS TO BE CONSTRUCTED

REGISTERED PROFESSIONAL ENGINEER 69245 OREGON JULY 09, 2002 AARON J. ISENHART

EXPIRES: 06/30/2017

OREGON DEPARTMENT OF TRANSPORTATION

Harper Houf Peterson Righellis Inc.
ENGINEERS • PLANNERS • LANDSCAPE ARCHITECTS • SURVEYORS
205 SE Spokane Street, Suite 200 Portland, OR 97202 phone: 503.221.1131 www.hhpr.com fax: 503.221.1171

17TH AVE TRAIL: SE OCHOCO - SE MCLOUGHLIN
CITY OF MILWAUKIE
CLACKAMAS COUNTY

REVIEWED BY AJI
DESIGNED BY KJO
DRAFTED BY KJO

CURB RETURN DETAILS

SHEET NO. 2E-4

P:\MWK (City of Milwaukie)\MWK-24 (17TH Ave Trail)\MWK24-DWGS\SHEETS\ MWK24-2E.dwg

49V-026

CURB RETURN GRADING DETAIL
NE CORNER OF 17TH AVE & MILPORT RD
SCALE: 1"=10'

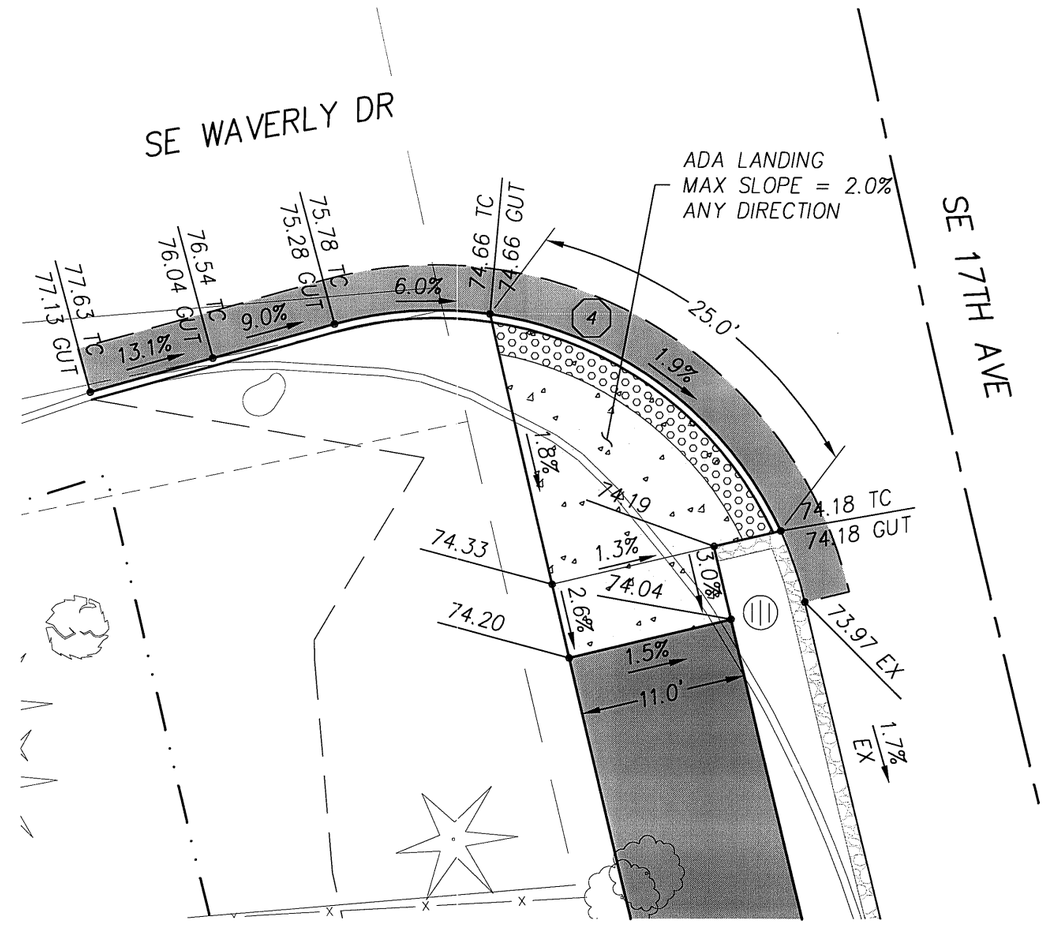

CURB RETURN GRADING DETAIL
SW CORNER OF 17TH AVE & WAVERLY DR
SCALE: 1"=10'

CURVE DATA

	Delta	Radius	Tangent	Length
1	10°49'30"	120.00'	11.37'	22.67'
2	67°08'26"	50.00'	33.18'	58.59'
3	93°29'28"	5.00'	5.31'	8.16'
4	80°59'23"	25.00'	21.35'	35.34'

GENERAL NOTE:
GRADING DETAILS ARE FOR ELEVATION AND GEOMETRY INFORMATION ONLY
SEE PLAN SHEETS FOR ITEMS TO BE CONSTRUCTED

REGISTERED PROFESSIONAL ENGINEER 69245 OREGON JULY 09, 2002 AARON J. ISENHART
EXPIRES: 06/30/2017

OREGON DEPARTMENT OF TRANSPORTATION

Harper Houf Peterson Righellis Inc.
ENGINEERS • PLANNERS • LANDSCAPE ARCHITECTS • SURVEYORS
205 SE Spokane Street, Suite 200 Portland, OR 97202 phone: 503.221.1131 www.hhpr.com fax: 503.221.1171

17TH AVE TRAIL: SE OCHOCO - SE MCLOUGHLIN
CITY OF MILWAUKIE
CLACKAMAS COUNTY

REVIEWED BY AJI
DESIGNED BY KJO
DRAFTED BY KJO

CURB RETURN DETAILS

SHEET NO. 2E-5

P:\MWK (City of Milwaukie)\MWK-24 (17TH Ave Trail)\MWK24-DWGS\SHEETS\ MWK24-2E.dwg

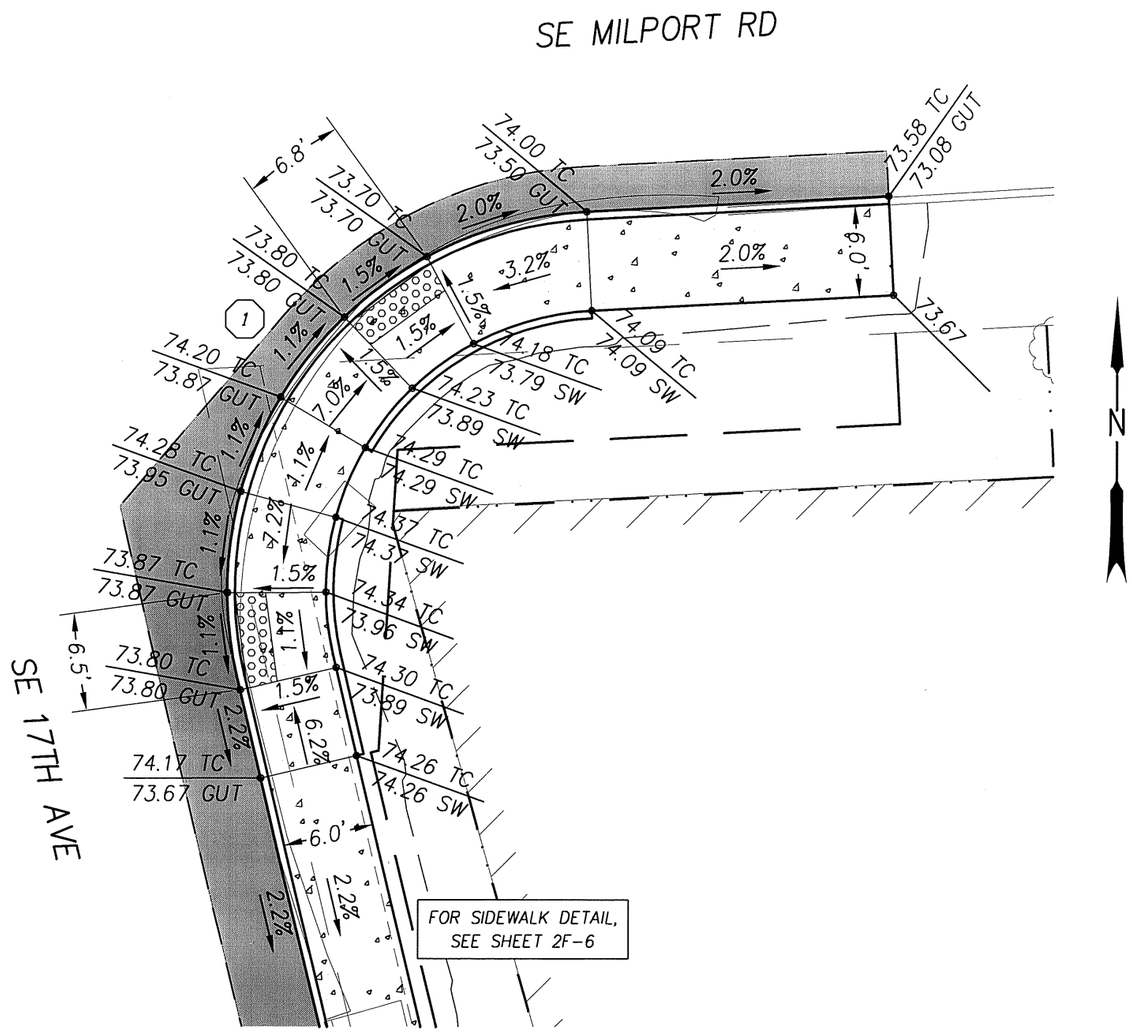

CURB RETURN GRADING DETAIL
SE CORNER OF 17TH AVE & MILPORT RD
SCALE: 1"=10'

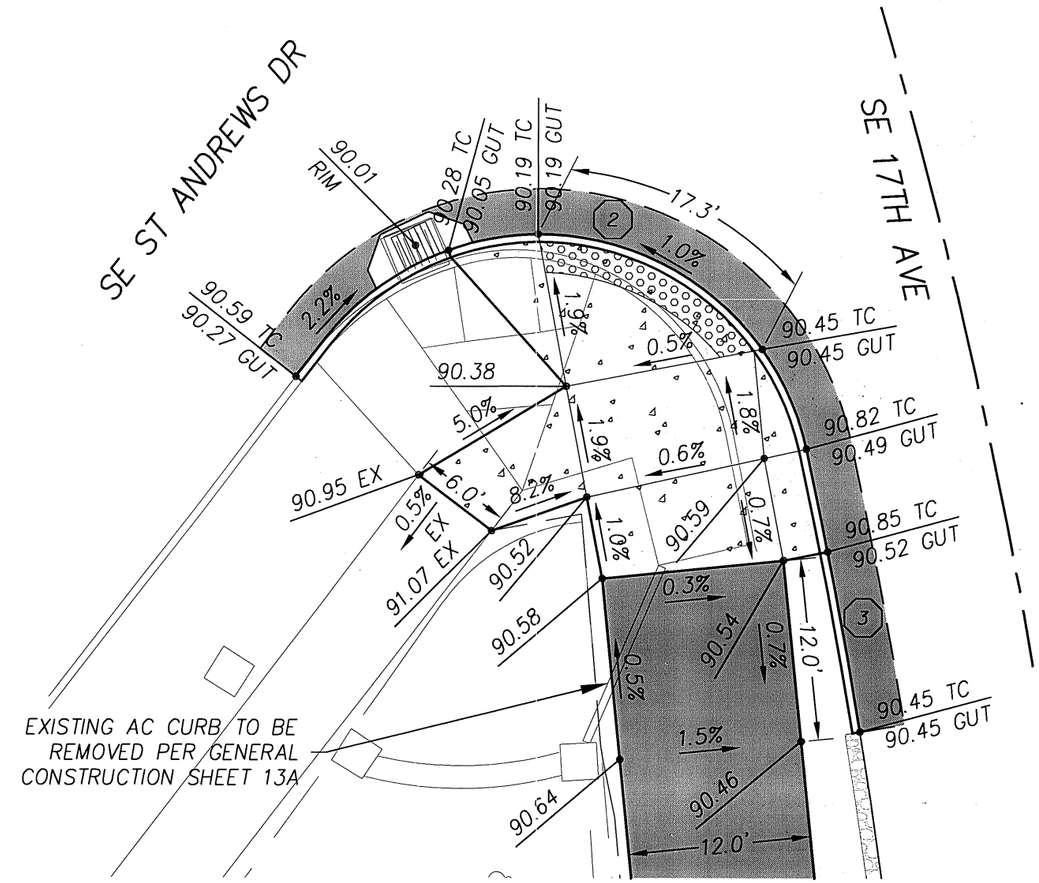

CURB RETURN GRADING DETAIL
SW CORNER OF 17TH AVE & ST ANDREWS DR
SCALE: 1"=10'

CURVE DATA

	Delta	Radius	Tangent	Length
1	100°04'59"	25.00'	29.84'	43.67'
2	129°56'03"	18.00'	38.54'	40.82"
3	2°59'56"	363.00'	9.50'	19.00"

GENERAL NOTE:
GRADING DETAILS ARE FOR ELEVATION AND GEOMETRY INFORMATION ONLY
SEE PLAN SHEETS FOR ITEMS TO BE CONSTRUCTED

REGISTERED PROFESSIONAL ENGINEER 69245 OREGON JULY 09, 2002 AARON J. ISENHART
EXPIRES: 06/30/2017

OREGON DEPARTMENT OF TRANSPORTATION

Harper Houf Peterson Righellis Inc.
ENGINEERS • PLANNERS • LANDSCAPE ARCHITECTS • SURVEYORS
205 SE Spokane Street, Suite 200 Portland, OR 97202 phone: 503.221.1131 www.hhpr.com fax: 503.221.1171

17TH AVE TRAIL: SE OCHOCO - SE MCLOUGHLIN
CITY OF MILWAUKIE
CLACKAMAS COUNTY

REVIEWED BY AJI
DESIGNED BY KJO
DRAFTED BY KJO

CURB RETURN DETAILS

SHEET NO. 2E-6

P:\MWK (City of Milwaukie)\MWK-24 (17TH Ave Trail)\MWK24-DWGS\SHEETS\ MWK24-2E.dwg

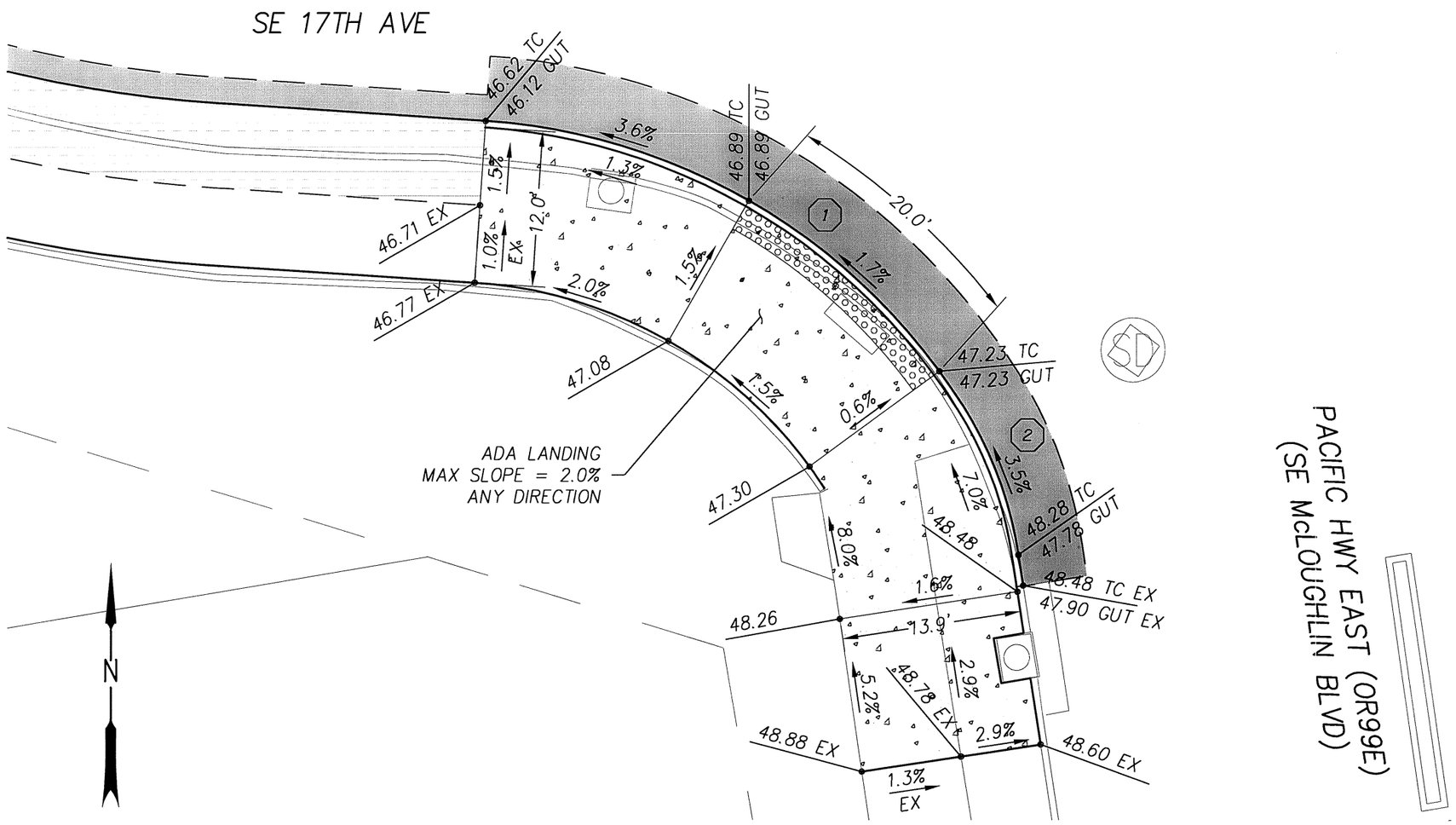

CURB RETURN GRADING DETAIL

SW CORNER OF 17TH AVE & PACIFIC HWY EAST (OR99E)

SCALE: 1"=10'

GENERAL NOTE:

GRADING DETAILS ARE FOR ELEVATION AND GEOMETRY INFORMATION ONLY
SEE PLAN SHEETS FOR ITEMS TO BE CONSTRUCTED

CURVE DATA

	Delta	Radius	Tangent	Length
1	53°58'29"	47.50'	24.19'	44.75'
2	23°36'21"	30.00'	6.27'	12.36'

REGISTERED PROFESSIONAL ENGINEER 69245 OREGON JULY 09, 2002 AARON J. ISENHART

EXPIRES: 06/30/2017

OREGON DEPARTMENT OF TRANSPORTATION

Harper Houf Peterson Righellis Inc.
ENGINEERS • PLANNERS • LANDSCAPE ARCHITECTS • SURVEYORS
205 SE Spokane Street, Suite 200 Portland, OR 97202 phone: 503.221.1131 www.hhpr.com fax: 503.221.1171

17TH AVE TRAIL: SE OCHOCO - SE MCLOUGHLIN
CITY OF MILWAUKIE
CLACKAMAS COUNTY

REVIEWED BY AJI
DESIGNED BY KJO
DRAFTED BY KJO

CURB RETURNS DETAILS

SHEET NO. 2E-7

P:\MWK (City of Milwaukie)\MWK-24 (17TH Ave Trail)\MWK24-DWGS\SHEETS\ MWK24-2E.dwg

49V-026

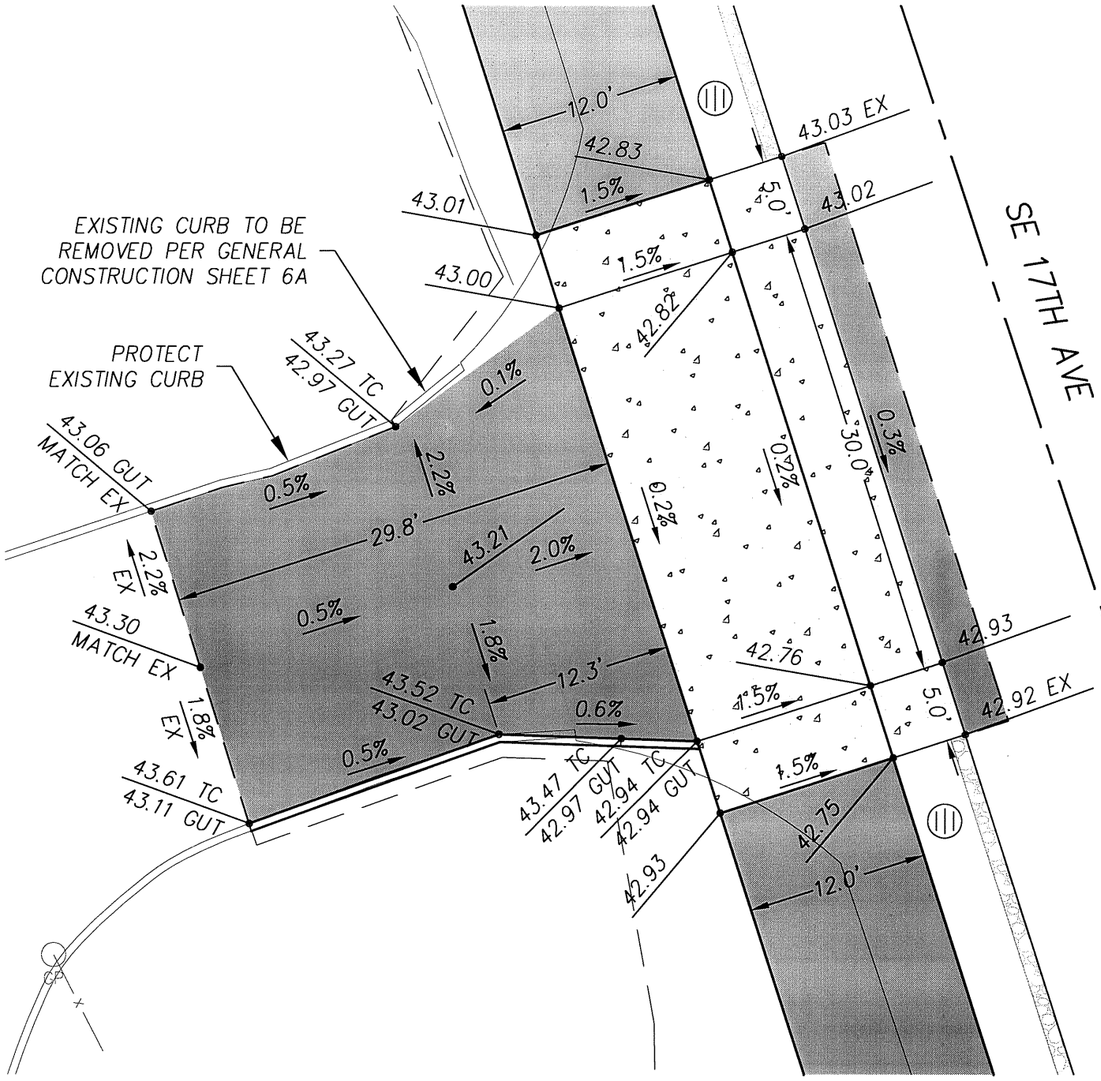

DRIVEWAY GRADING DETAIL
DRIVEWAY #1
WAVERLEY GREENS APARTMENTS DRIVEWAY
'B' ALIGNMENT STA 113+06.85
SCALE: 1"=10'

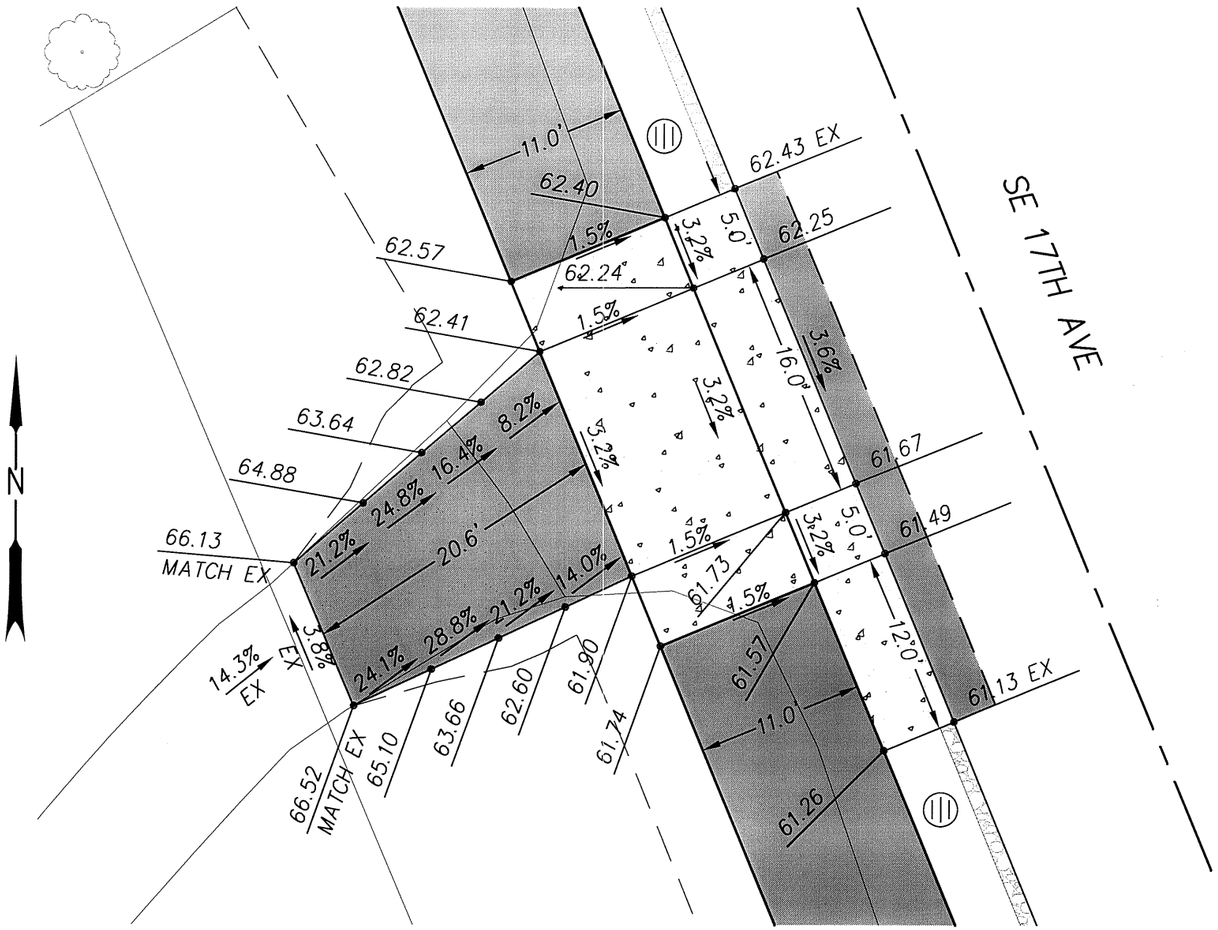

DRIVEWAY GRADING DETAIL
DRIVEWAY #2
NICHOLS DRIVEWAY
'B' ALIGNMENT STA 125+37.63
SCALE: 1"=10'

REGISTERED PROFESSIONAL ENGINEER
69245
OREGON
JULY 09, 2002
AARON J. ISENHART
EXPIRES: 06/30/2017

OREGON DEPARTMENT OF TRANSPORTATION

Harper Houf Peterson Righellis Inc.
ENGINEERS • PLANNERS • LANDSCAPE ARCHITECTS • SURVEYORS
205 SE Spokane Street, Suite 200 Portland, OR 97202 phone: 503.221.1131 www.hhpr.com fax: 503.221.1171

17TH AVE TRAIL: SE OCHOCO - SE MCLOUGHLIN
CITY OF MILWAUKIE
CLACKAMAS COUNTY

REVIEWED BY AJI
DESIGNED BY KJO
DRAFTED BY KJO

SIDEWALK AND DRIVEWAY DETAILS

SHEET NO. 2F

P:\MWK (City of Milwaukie)\MWK-24 (17TH Ave Trail)\MWK24-DWGS\SHEETS\ MWK24-2F.dwg

49V-026

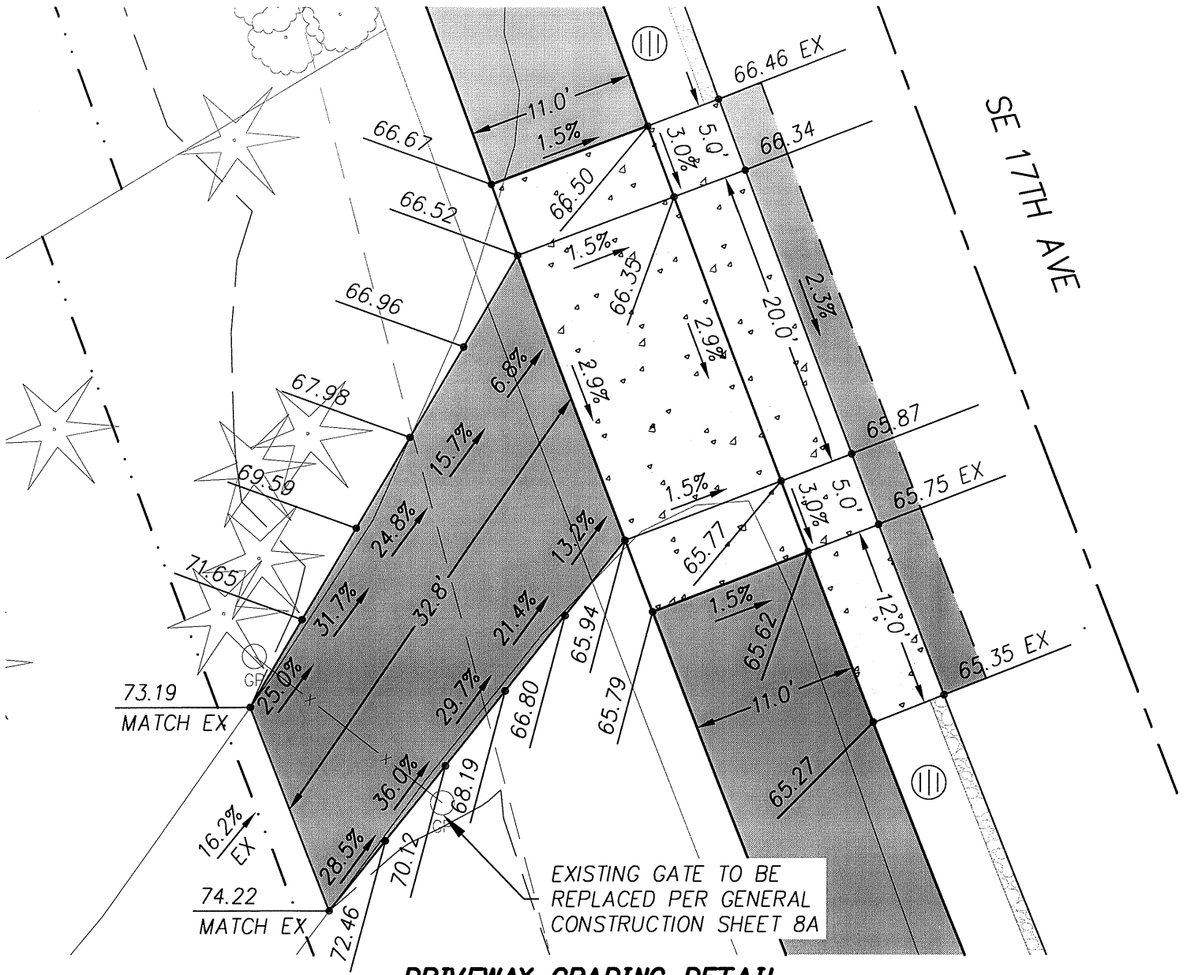

DRIVEWAY GRADING DETAIL

DRIVEWAY #3
HOPPER DRIVEWAY
'B' ALIGNMENT STA 126+74.05
SCALE: 1"=10'

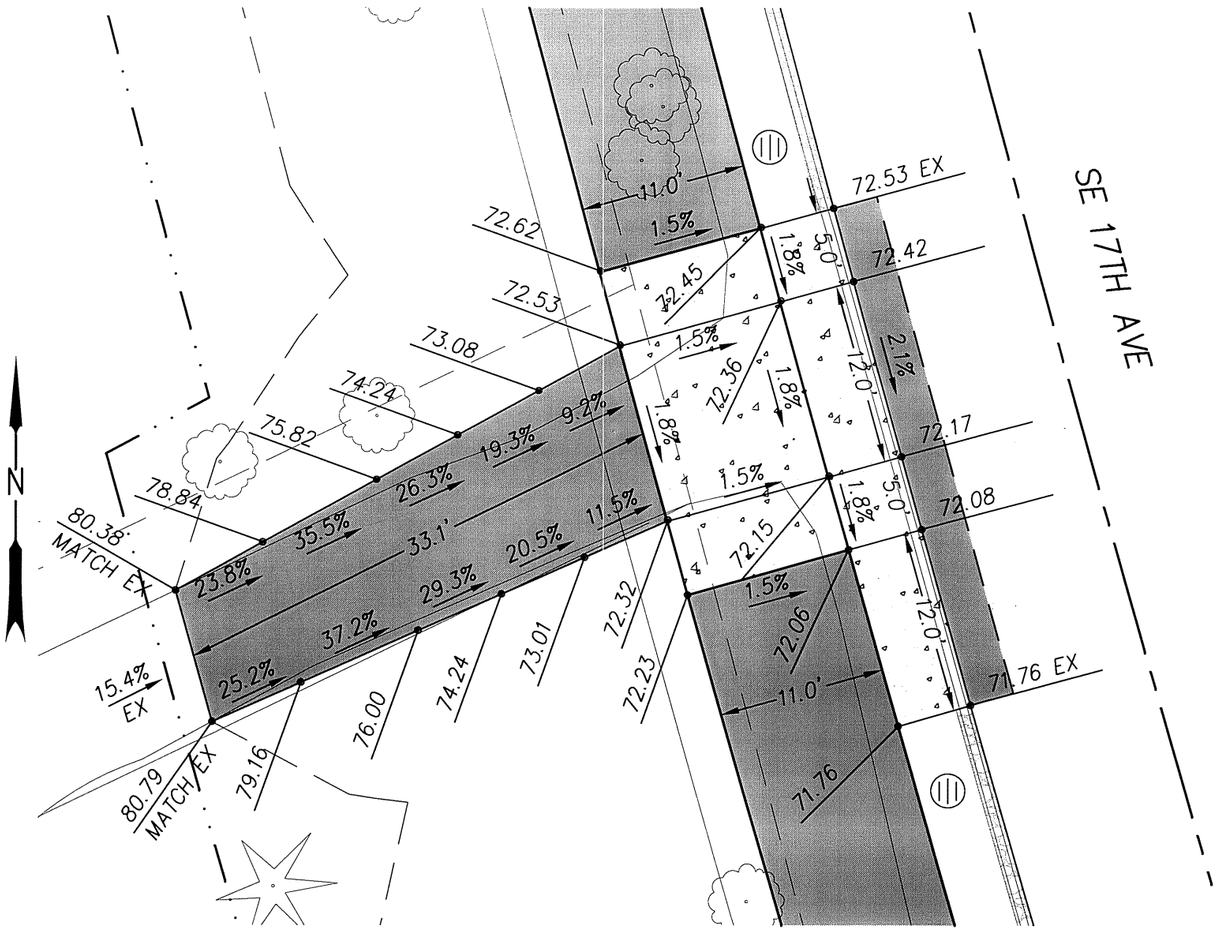

DRIVEWAY GRADING DETAIL

DRIVEWAY #4
NOLAN DRIVEWAY
'B' ALIGNMENT STA 129+03.28
SCALE: 1"=10'

REGISTERED PROFESSIONAL ENGINEER
69245
OREGON
JULY 09, 2002
AARON J. ISENHART
EXPIRES: 06/30/2017

OREGON DEPARTMENT OF TRANSPORTATION

Harper Houf Peterson Righellis Inc.
ENGINEERS • PLANNERS • LANDSCAPE ARCHITECTS • SURVEYORS
205 SE Spokane Street, Suite 200 Portland, OR 97202 phone: 503.221.1131 www.hhpr.com fax: 503.221.1171

17TH AVE TRAIL: SE OCHOCO - SE MCLOUGHLIN
CITY OF MILWAUKIE
CLACKAMAS COUNTY

REVIEWED BY AJI
DESIGNED BY KJO
DRAFTED BY KJO

SIDEWALK AND DRIVEWAY DETAILS

SHEET NO. 2F-2

P:\MWK (City of Milwaukie)\MWK-24 (17TH Ave Trail)\MWK24-DWGS\SHEETS\ MWK24-2F.dwg

49V-026

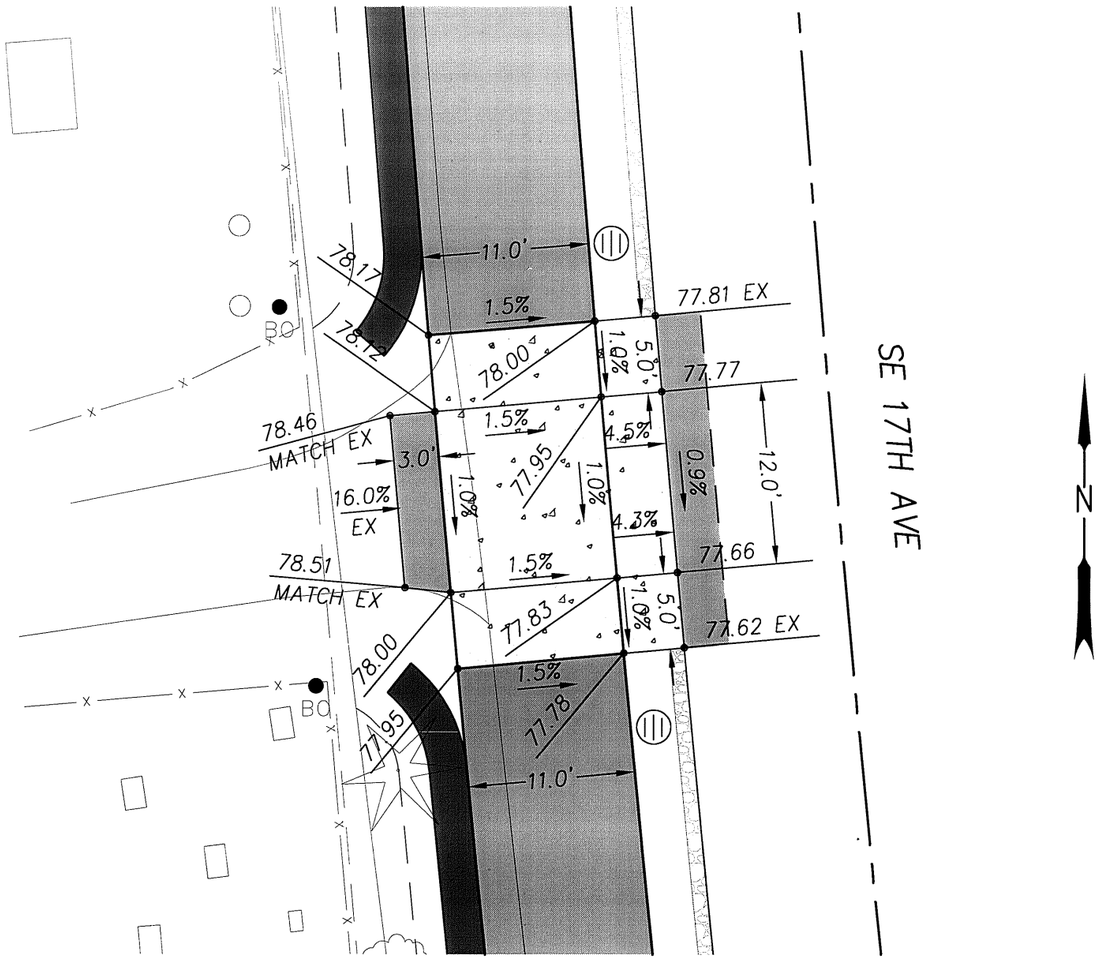

DRIVEWAY GRADING DETAIL

DRIVEWAY #5
MILWAUKIE PIONEER CEMETERY DRIVEWAY
'B' ALIGNMENT STA 132+91.15
SCALE: 1"=10'

REGISTERED PROFESSIONAL ENGINEER
69245
OREGON
JULY 09, 2002
AARON J. ISENHART
EXPIRES: 06/30/2017

OREGON DEPARTMENT OF TRANSPORTATION

Harper Houf Peterson Righellis Inc.
ENGINEERS • PLANNERS • LANDSCAPE ARCHITECTS • SURVEYORS
205 SE Spokane Street, Suite 200 Portland, OR 97202 phone: 503.221.1131 www.hhpr.com fax: 503.221.1171

17TH AVE TRAIL: SE OCHOCO - SE MCLOUGHLIN
CITY OF MILWAUKIE
CLACKAMAS COUNTY

REVIEWED BY AJI
DESIGNED BY KJO
DRAFTED BY KJO

SIDEWALK AND DRIVEWAY DETAILS

SHEET NO. 2F-3

P:\MWK (City of Milwaukie)\MWK-24 (17TH Ave Trail)\MWK24-DWGS\SHEETS\ MWK24-2F.dwg

49V-026

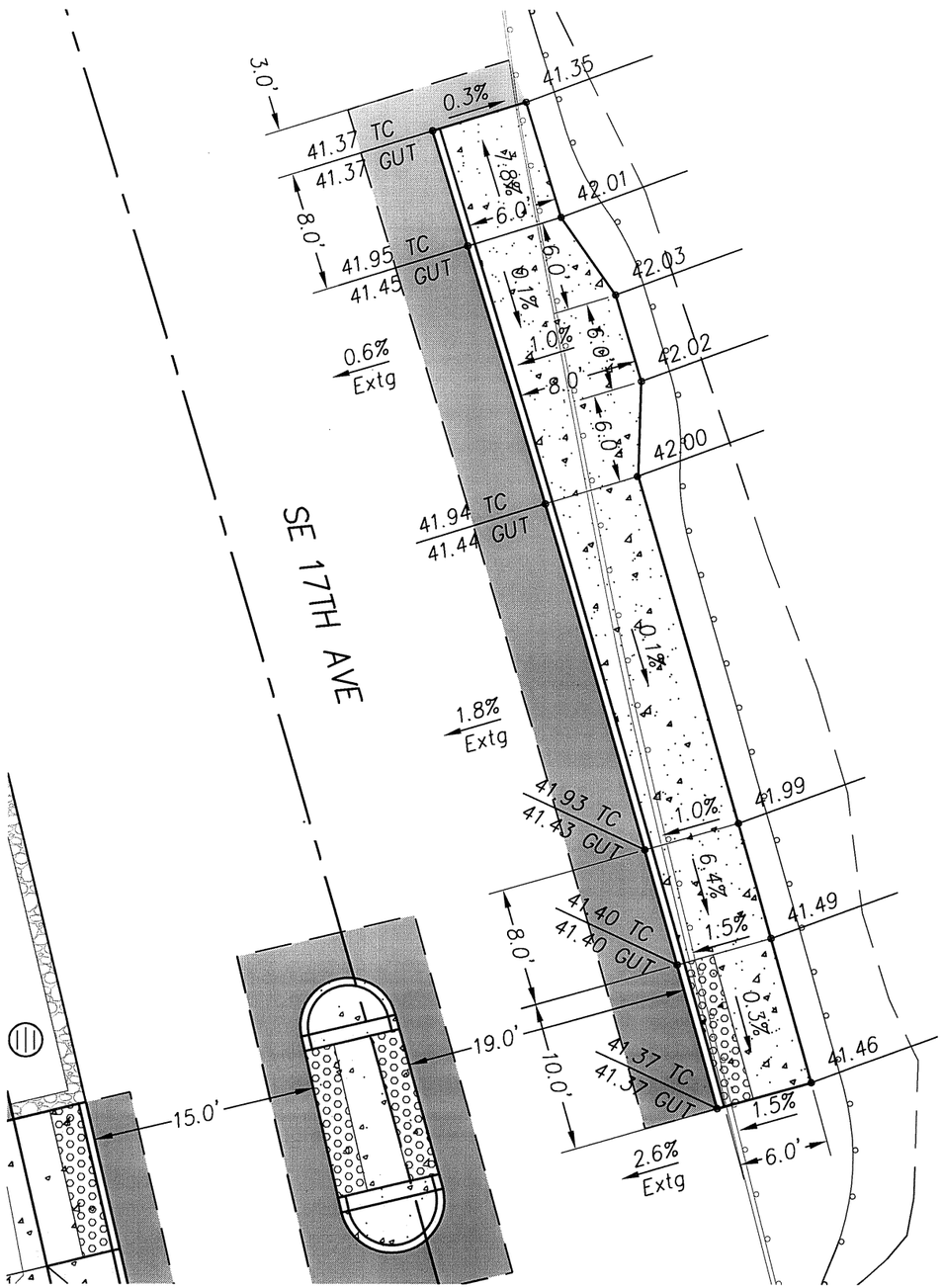

SIDEWALK GRADING DETAILS

'B' ALIGNMENT STA 109+10.48, 45.97' R TO STA 109+77.23, 42.93' R

SCALE: 1"=10'

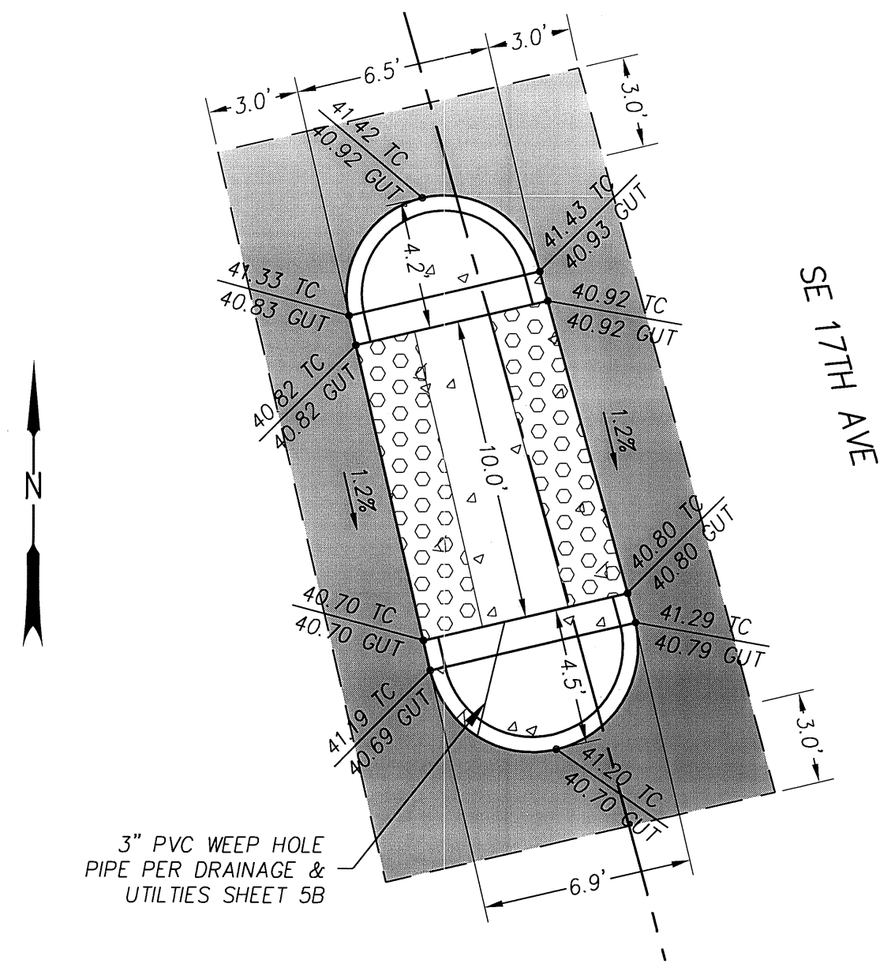

MEDIAN GRADING DETAILS

'B' ALIGNMENT STA 109+05.97, 20.76' R TO STA 109+24.81, 20.76' R

SCALE: 1"=5'

REGISTERED PROFESSIONAL ENGINEER 69245 OREGON JULY 09, 2002 AARON J. ISENHART

EXPIRES: 06/30/2017

OREGON DEPARTMENT OF TRANSPORTATION

Harper Houf Peterson Righellis Inc.
ENGINEERS • PLANNERS • LANDSCAPE ARCHITECTS • SURVEYORS
205 SE Spokane Street, Suite 200 Portland, OR 97202 phone: 503.221.1131 www.hhpr.com fax: 503.221.1171

17TH AVE TRAIL: SE OCHOCO - SE MCLOUGHLIN
CITY OF MILWAUKIE
CLACKAMAS COUNTY

REVIEWED BY AJI
DESIGNED BY KJO
DRAFTED BY KJO

SIDEWALK AND DRIVEWAY DETAILS

SHEET NO. 2F-4

P:\MWK (City of Milwaukie)\MWK-24 (17TH Ave Trail)\MWK24-DWGS\SHEETS\ MWK24-2F.dwg

49V-026

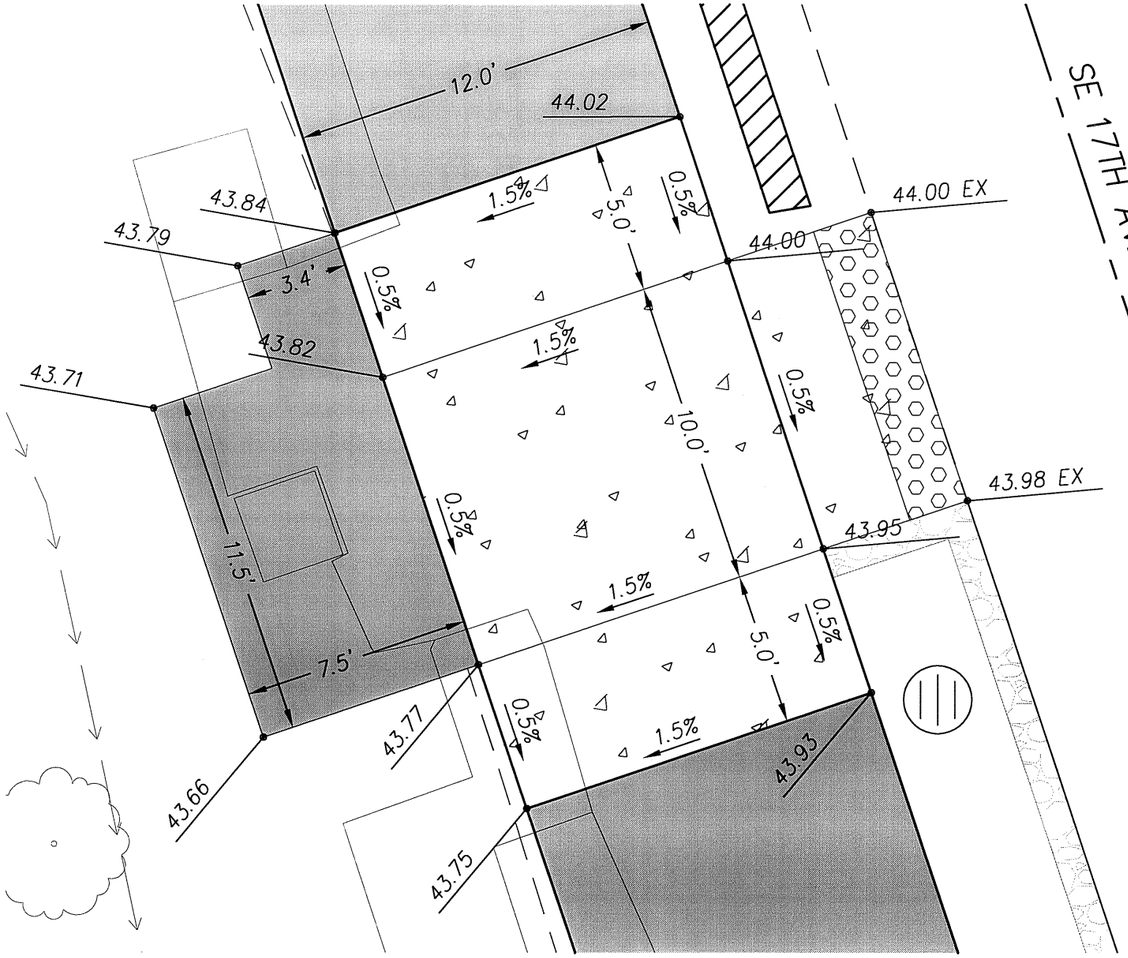

PEDESTRIAN RAMP GRADING DETAILS
SW CORNER 17TH AVE & MILWAUKIE EXPWY (OR224)
'B' ALIGNMENT STA 116+90.05
SCALE: 1"=5'

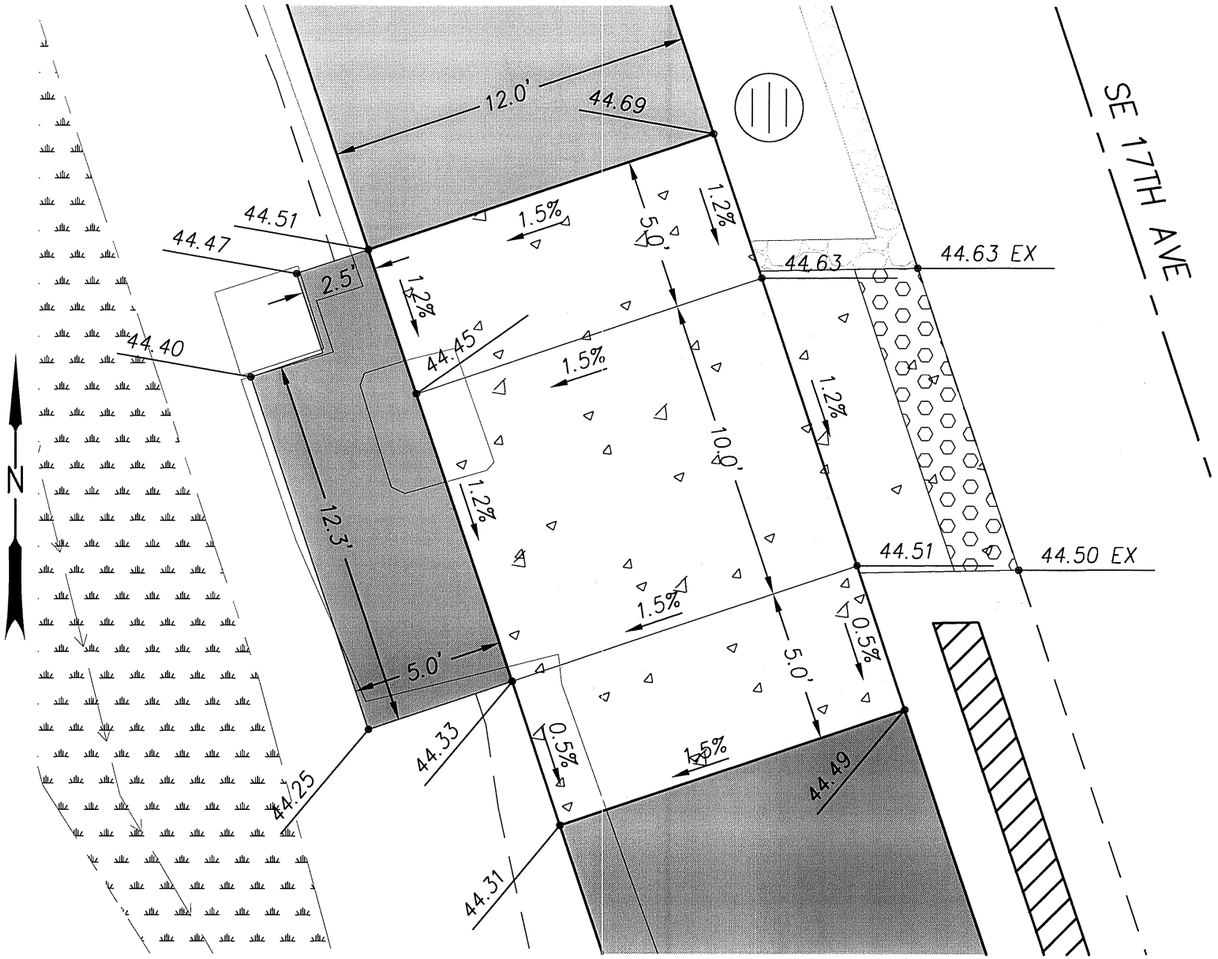

PEDESTRIAN RAMP GRADING DETAILS
NW CORNER 17TH AVE & MILWAUKIE EXPWY (OR224)
'B' ALIGNMENT STA 118+08.80
SCALE: 1"=5'

REGISTERED PROFESSIONAL ENGINEER
69245
OREGON
JULY 09, 2002
AARON J. ISENHART
EXPIRES: 06/30/2017

OREGON DEPARTMENT OF TRANSPORTATION

Harper Houf Peterson Righellis Inc.
ENGINEERS • PLANNERS • LANDSCAPE ARCHITECTS • SURVEYORS
205 SE Spokane Street, Suite 200 Portland, OR 97202 phone: 503.221.1131 www.hhpr.com fax: 503.221.1171

17TH AVE TRAIL: SE OCHOCO - SE MCLOUGHLIN
CITY OF MILWAUKIE
CLACKAMAS COUNTY

REVIEWED BY AJI
DESIGNED BY KJO
DRAFTED BY KJO

SIDEWALK AND DRIVEWAY DETAILS

SHEET NO. 2F-5

P:\MWK (City of Milwaukie)\MWK-24 (17TH Ave Trail)\MWK24-DWGS\SHEETS\ MWK24-2F.dwg

49V-026

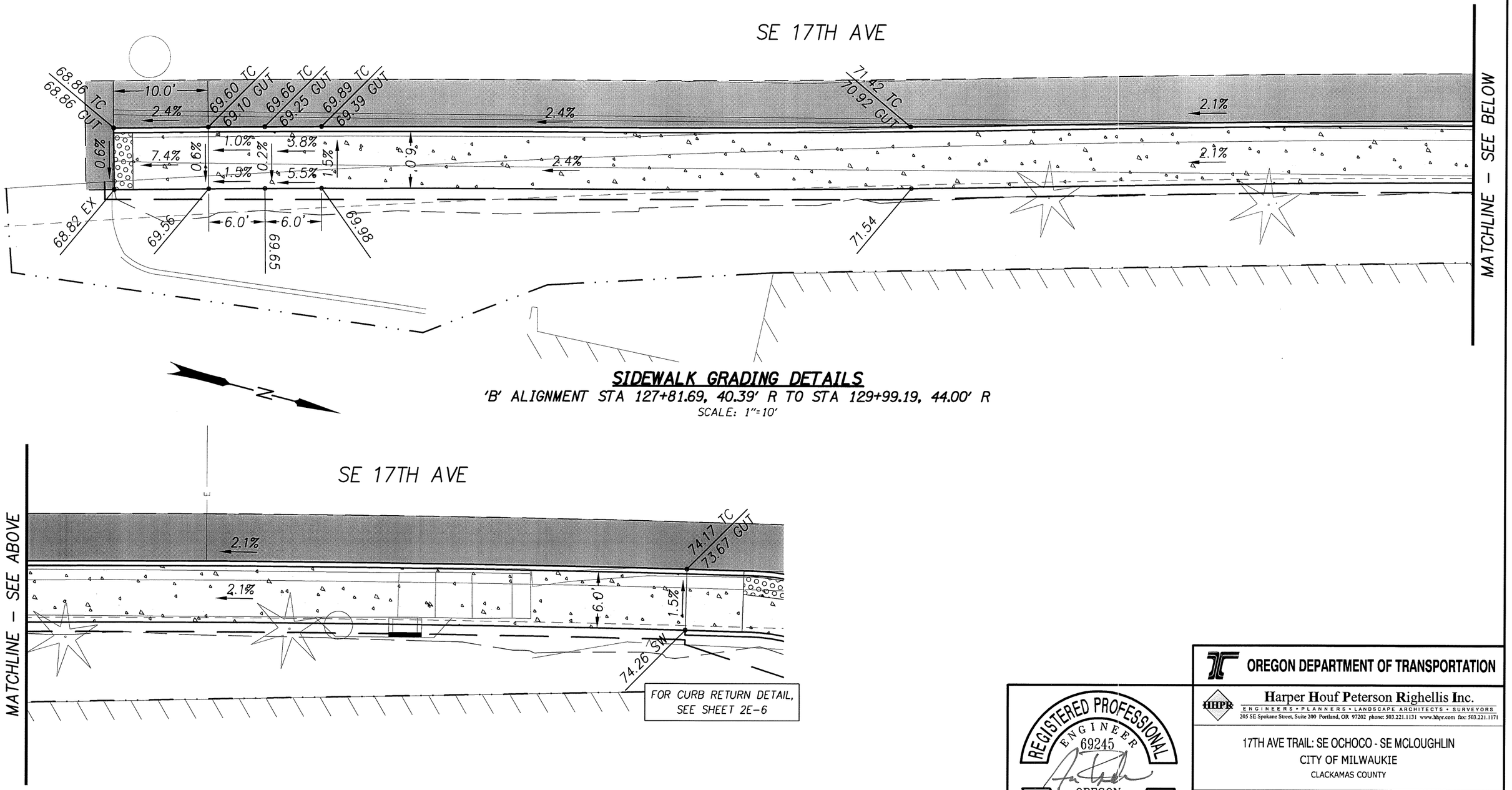

SIDEWALK GRADING DETAILS

'B' ALIGNMENT STA 127+81.69, 40.39' R TO STA 129+99.19, 44.00' R

SCALE: 1"=10'

P:\MWK (City of Milwaukie)\MWK-24 (17TH Ave Trail)\MWK24-DWGS\SHEETS\ MWK24-2F.dwg

REGISTERED PROFESSIONAL ENGINEER 69245 OREGON JULY 09, 2002 AARON J. ISENHART

EXPIRES: 06/30/2017

OREGON DEPARTMENT OF TRANSPORTATION

Harper Houf Peterson Righellis Inc.
ENGINEERS • PLANNERS • LANDSCAPE ARCHITECTS • SURVEYORS
205 SE Spokane Street, Suite 200 Portland, OR 97202 phone: 503.221.1131 www.hhpr.com fax: 503.221.1171

17TH AVE TRAIL: SE OCHOCO - SE MCLOUGHLIN
CITY OF MILWAUKIE
CLACKAMAS COUNTY

REVIEWED BY AJI
DESIGNED BY KJO
DRAFTED BY KJO

SIDEWALK AND DRIVEWAY DETAILS

SHEET NO. 2F-6

Sec. 35, T. 1S, R. 1E, W.M.

49V-026

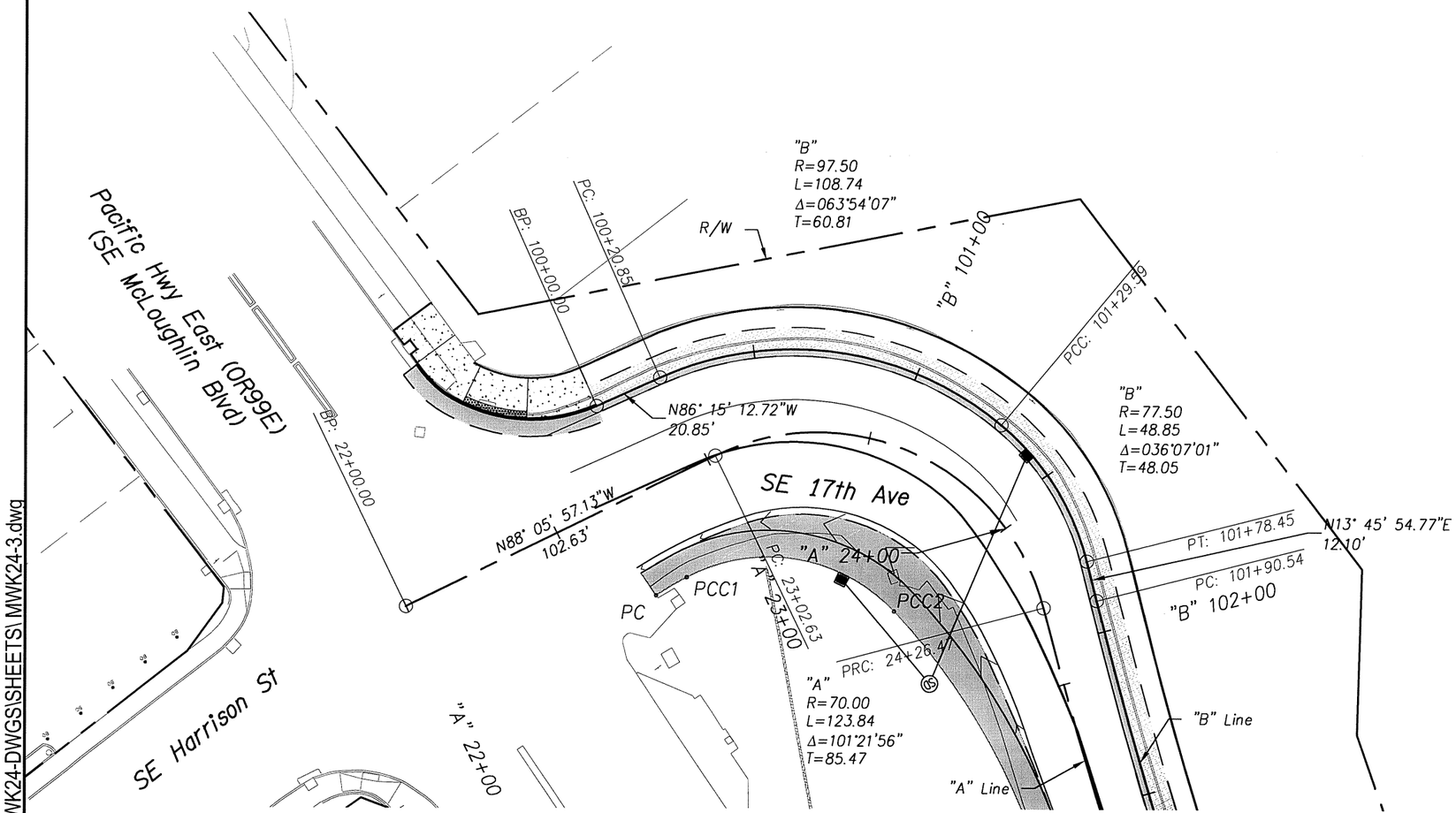

CURVE DATA

Point	Station	Offset
PC	'A' 22+68.58	29.77' Rt.
PCC1	'A' 22+79.18	28.97' Rt.
PCC2	'A' 24+00.58	41.67' Rt.
PT	'A' 24+89.14	21.83' Rt.
EP	'A' 25+09.31	20.81' Rt.

REGISTERED PROFESSIONAL ENGINEER
69245
OREGON
JULY 09, 2002
AARON J. ISENHART

EXPIRES: 06/30/2017

OREGON DEPARTMENT OF TRANSPORTATION

Harper Houf Peterson Righellis Inc.
ENGINEERS • PLANNERS • LANDSCAPE ARCHITECTS • SURVEYORS
205 SE Spokane Street, Suite 200 Portland, OR 97202 phone: 503.221.1131 www.hhpr.com fax: 503.221.1171

17TH AVE TRAIL: SE OCHOCO - SE MCLOUGHLIN
CITY OF MILWAUKIE
CLACKAMAS COUNTY

REVIEWED BY AJI
DESIGNED BY KJO
DRAFTED BY KJO

ALIGNMENT AND RIGHT OF WAY PLAN

SHEET NO. 3

P:\MWK (City of Milwaukie)\MWK-24 (17TH Ave Trail)\MWK24-DWGS\SHEETS\ MWK24-3.dwg

Sec. 35, T. 1S, R. 1E, W.M.

49V-026

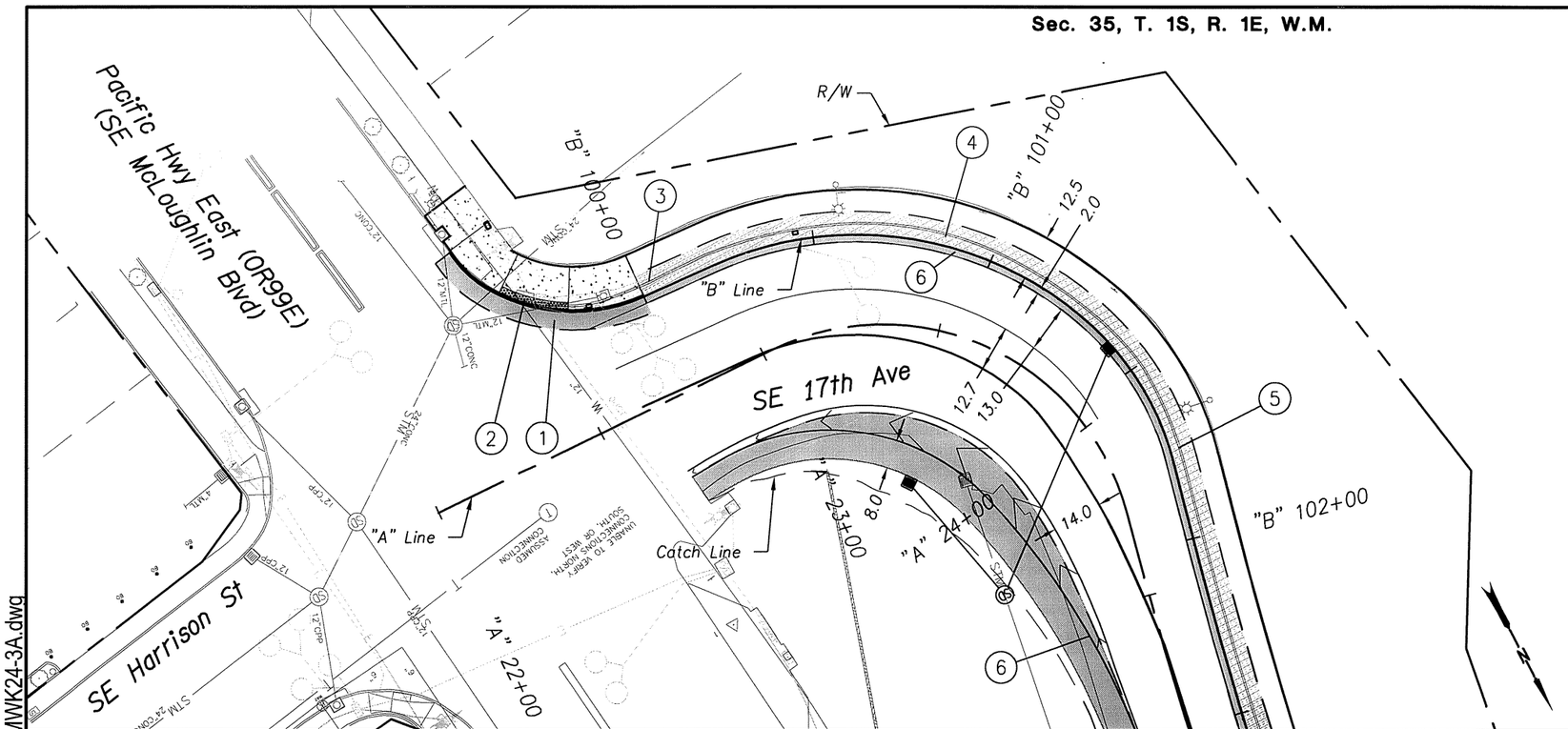

1. Const. asph. conc. pavement
   Sawcut extg. asph. at match lines
   (For details, see sht. 2B-7)

2. Sawcut and remove extg. P.C. conc. sidewalk
   Const. P.C. conc. sidewalk
   Const. sidewalk ramp (option K)
   (For details, see sht. 2E-7)
   (See drg. nos. RD757 & RD759)

3. Sta. "B" 100+00.00 to Sta. "B" 100+02.46
   Sawcut and remove extg. sidewalk
   Const. P.C. conc. sidewalk widening
   (For details, see sht. 2B-8)
   (See drg. nos. RD700 & RD720)

4. Sta. "B" 100+02.46 to Sta. "B" 101+35.00
   Sawcut and remove extg. sidewalk
   Const. P.C. conc. sidewalk widening
   (Structural pay item)
   (For details, see sht. 2B-8 & Bridge Plans)

5. Sta. "B" 101+35.00 to Sta. "B" 103+98.51
   Sawcut and remove extg. sidewalk
   Const. P.C. conc. sidewalk widening
   (For details, see sht. 2B-8)

6. Const. asph. conc. pavement
   Sawcut extg. asph. at match lines

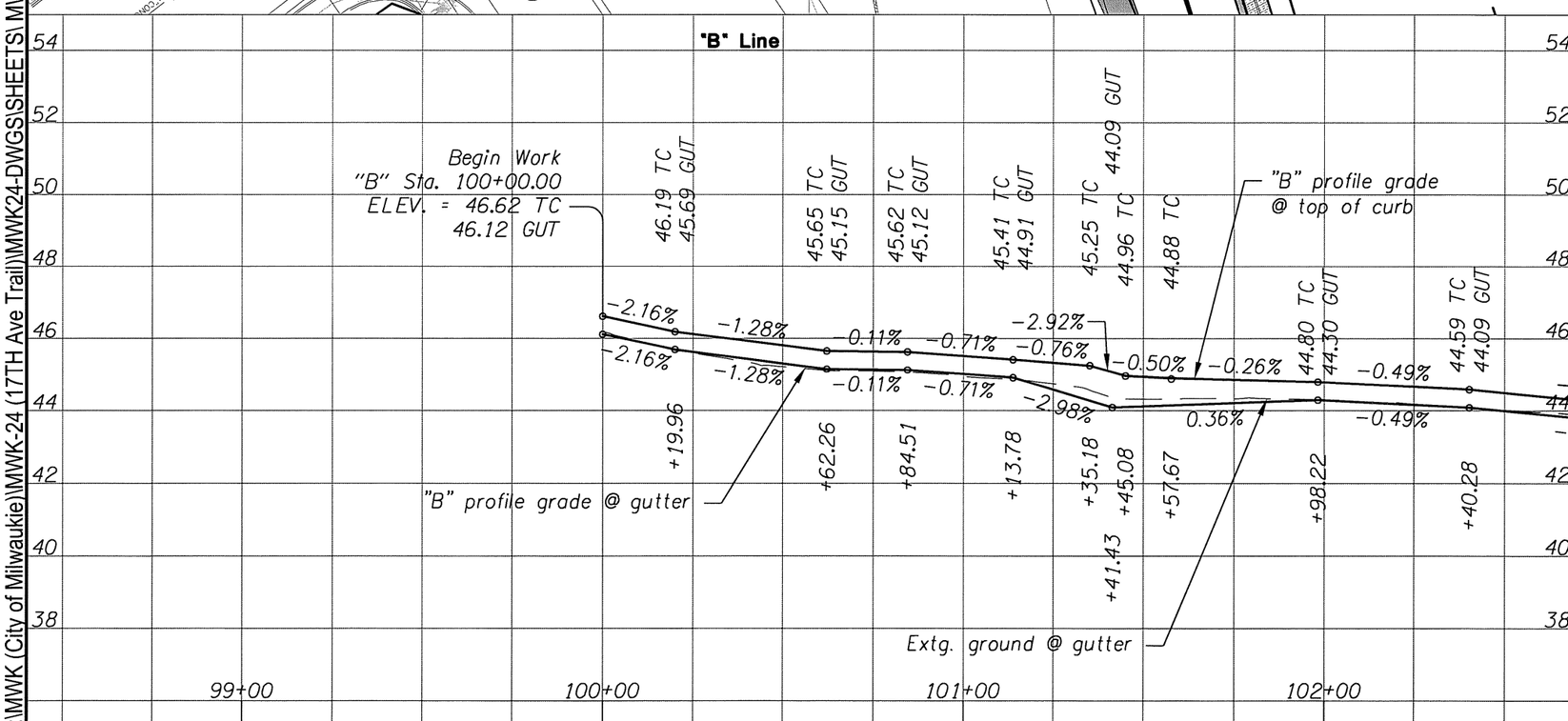

REGISTERED PROFESSIONAL ENGINEER 69245 OREGON JULY 09, 2002 AARON J. ISENHART

EXPIRES: 06/30/2017

OREGON DEPARTMENT OF TRANSPORTATION

Harper Houf Peterson Righellis Inc.
ENGINEERS • PLANNERS • LANDSCAPE ARCHITECTS • SURVEYORS
205 SE Spokane Street, Suite 200 Portland, OR 97202 phone: 503.221.1131 www.hhpr.com fax: 503.221.1171

17TH AVE TRAIL: SE OCHOCO - SE MCLOUGHLIN
CITY OF MILWAUKIE
CLACKAMAS COUNTY

REVIEWED BY AJI
DESIGNED BY KJO
DRAFTED BY KJO

GENERAL CONSTRUCTION

SHEET NO. 3A

P:\MWK (City of Milwaukie)\MWK-24 (17TH Ave Trail)\MWK24-DWGS\SHEETS\ MWK24-3A.dwg

49V-026

Sec. 35, T. 1S, R. 1E, W.M.

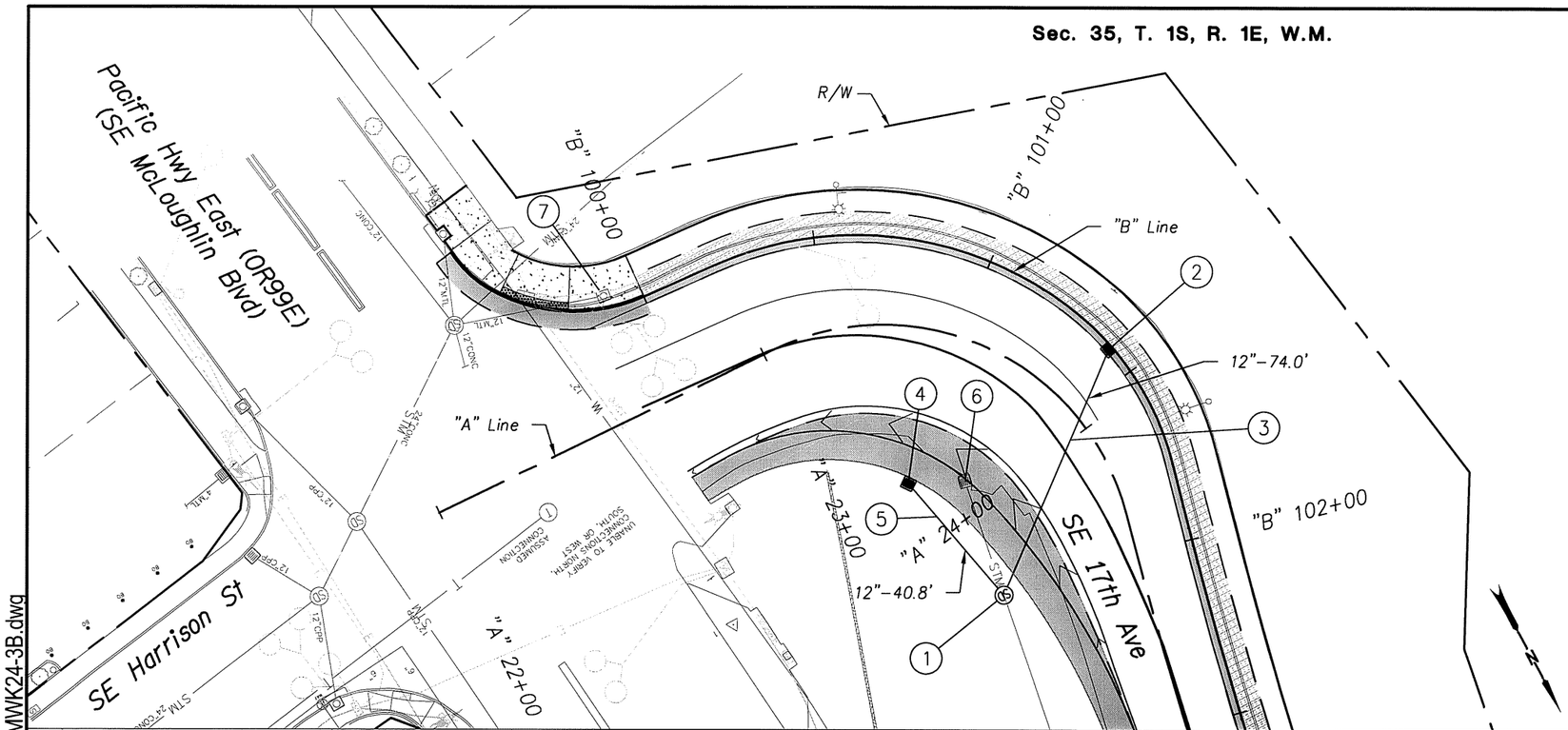

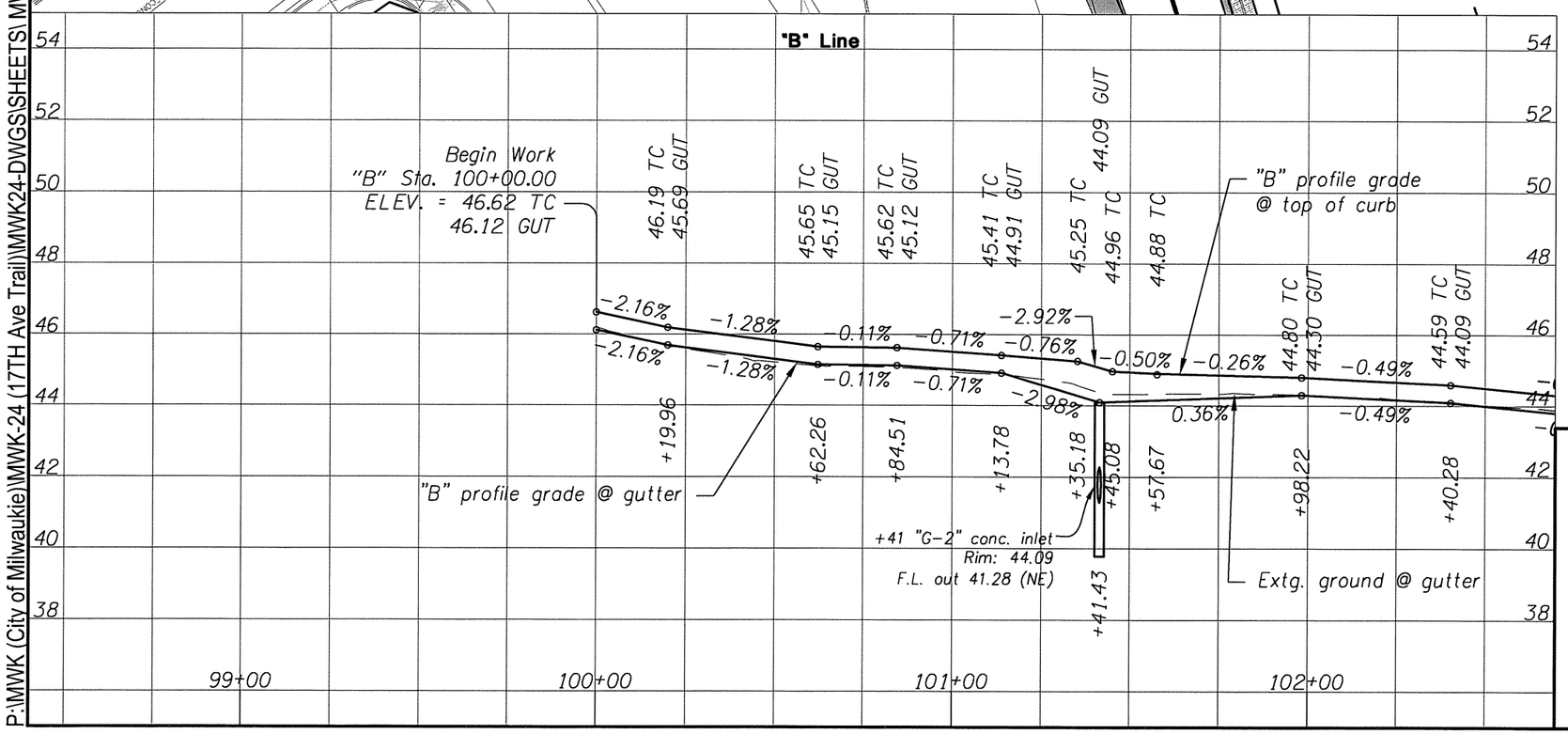

1. Sta. "B" 102+01.92, 54.42' Rt.
   Const. storm manhole (flat top)
   Rim elev. = 45.25
   I.E. (12" in) – 40.91 (SE)
   I.E. (12" in) – 40.91 (S)
   I.E. (12" out) – 40.66 (N) Field verify
   (See drg. nos. RD335, RD336, RD337, RD344, RD 345, & RD356)

2. Sta. "B" 101+41.43, 0' Rt.
   Const. type "G-2" conc. inlet.
   Rim elev. = 44.09
   Sump depth = 12"
   I.E. (12" out) – 41.28 (NE)
   (See drg. nos. RD363, RD364, & RD365)

3. Inst. 12" storm sew. pipe – 74.0'
   5' depth
   S = 0.0050 ft./ft.
   Trench Resurf. – 32.89 sq. yd.
   (See drg. nos. RD300, RD302, RD339, & RD376)

4. Sta. "B" 101+07.58, 65.26' Rt.
   Const. type "G-2" conc. inlet.
   Rim elev. = 43.59
   Sump depth = 12"
   I.E. (12" out) – 41.11 (N)

5. Inst. 12" storm sew. pipe – 40.8'
   5' depth
   S = 0.0050 ft./ft.

6. Sta. "B" 101+45.24, 55.2' Rt.
   Remove extg. inlet
   Plug and abandon extg. storm sew. pipe

7. Sta. "A" 22+67.08, 32.6' Lt.
   Remove extg. inlet
   Plug and abandon extg. storm sew. pipe

Note:

G-2 inlet stations, offsets and rim elevations are to the center of the structure at the face of the curb at gutter elevation. All other structures are to the center of the structure. See standard drawings for any additional depression of gutterline at inlets.

REGISTERED PROFESSIONAL ENGINEER 77,944 OREGON JAN. 3, 2011 BEAU J. BRAMAN

EXPIRES: 12/31/2017

OREGON DEPARTMENT OF TRANSPORTATION

Harper Houf Peterson Righellis Inc.
ENGINEERS • PLANNERS • LANDSCAPE ARCHITECTS • SURVEYORS
205 SE Spokane Street, Suite 200 Portland, OR 97202 phone: 503.221.1131 www.hhpr.com fax: 503.221.1171

17TH AVE TRAIL: SE OCHOCO - SE MCLOUGHLIN
CITY OF MILWAUKIE
CLACKAMAS COUNTY

REVIEWED BY AJI
DESIGNED BY BJB
DRAFTED BY KJO

DRAINAGE & UTILITIES

SHEET NO. 3B

P:\MWK (City of Milwaukie)\MWK-24 (17TH Ave Trail)\MWK24-DWGS\SHEETS\ MWK24-3B.dwg

Sec. 35, T. 1S, R. 1E, W.M.

49V-026

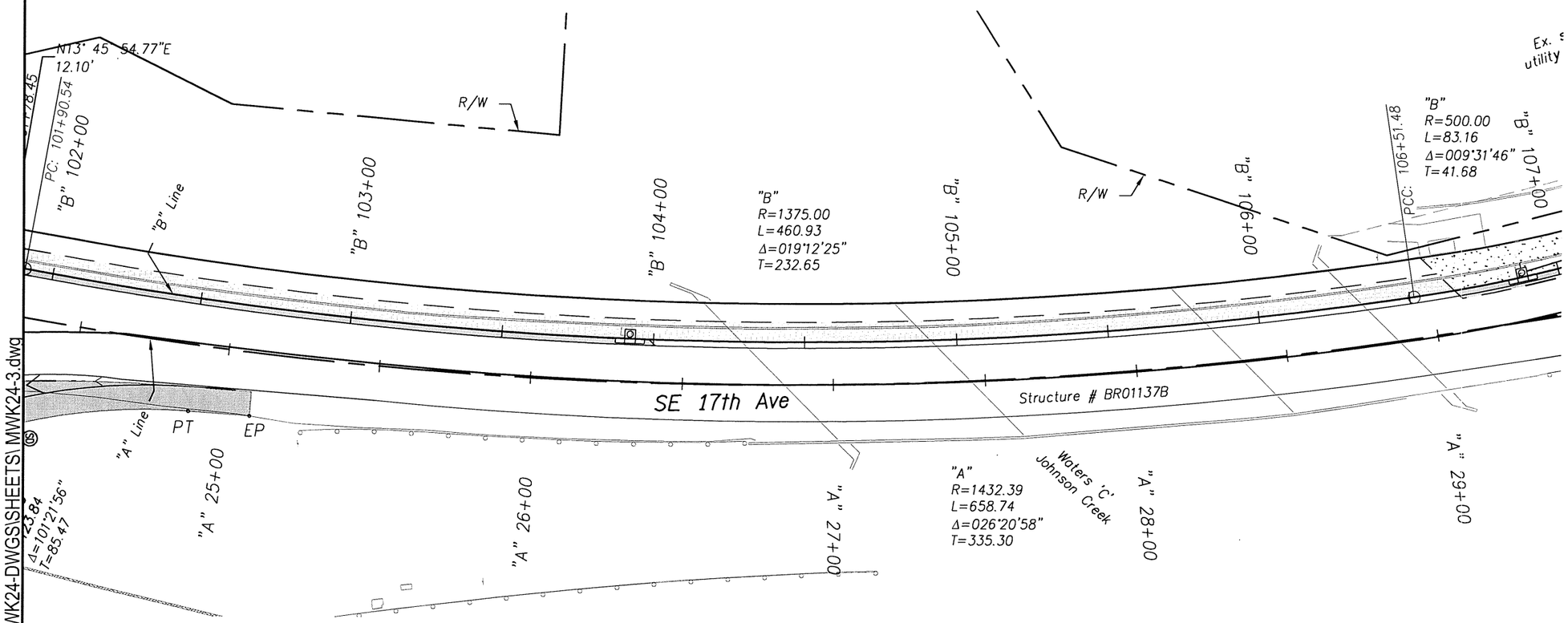

CURVE DATA

Point	Station	Offset
PC	'A' 22+68.58	29.77' Rt.
PCC1	'A' 22+79.18	28.97' Rt.
PCC2	'A' 24+00.58	41.67' Rt.
PT	'A' 24+89.14	21.83' Rt.
EP	'A' 25+09.31	20.81' Rt.

REGISTERED PROFESSIONAL ENGINEER
69245
OREGON
JULY 09, 2002
AARON J. ISENHART

EXPIRES: 06/30/2017

OREGON DEPARTMENT OF TRANSPORTATION

Harper Houf Peterson Righellis Inc.
ENGINEERS • PLANNERS • LANDSCAPE ARCHITECTS • SURVEYORS
205 SE Spokane Street, Suite 200 Portland, OR 97202 phone: 503.221.1131 www.hhpr.com fax: 503.221.1171

17TH AVE TRAIL: SE OCHOCO - SE MCLOUGHLIN
CITY OF MILWAUKIE
CLACKAMAS COUNTY

REVIEWED BY AJI
DESIGNED BY KJO
DRAFTED BY KJO

ALIGNMENT AND RIGHT OF WAY PLAN

SHEET NO. 4

P:\MWK (City of Milwaukie)\MWK-24 (17TH Ave Trail)\MWK24-DWGS\SHEETS\ MWK24-3.dwg

Sec. 35, T. 1S, R. 1E, W.M.

49V-026

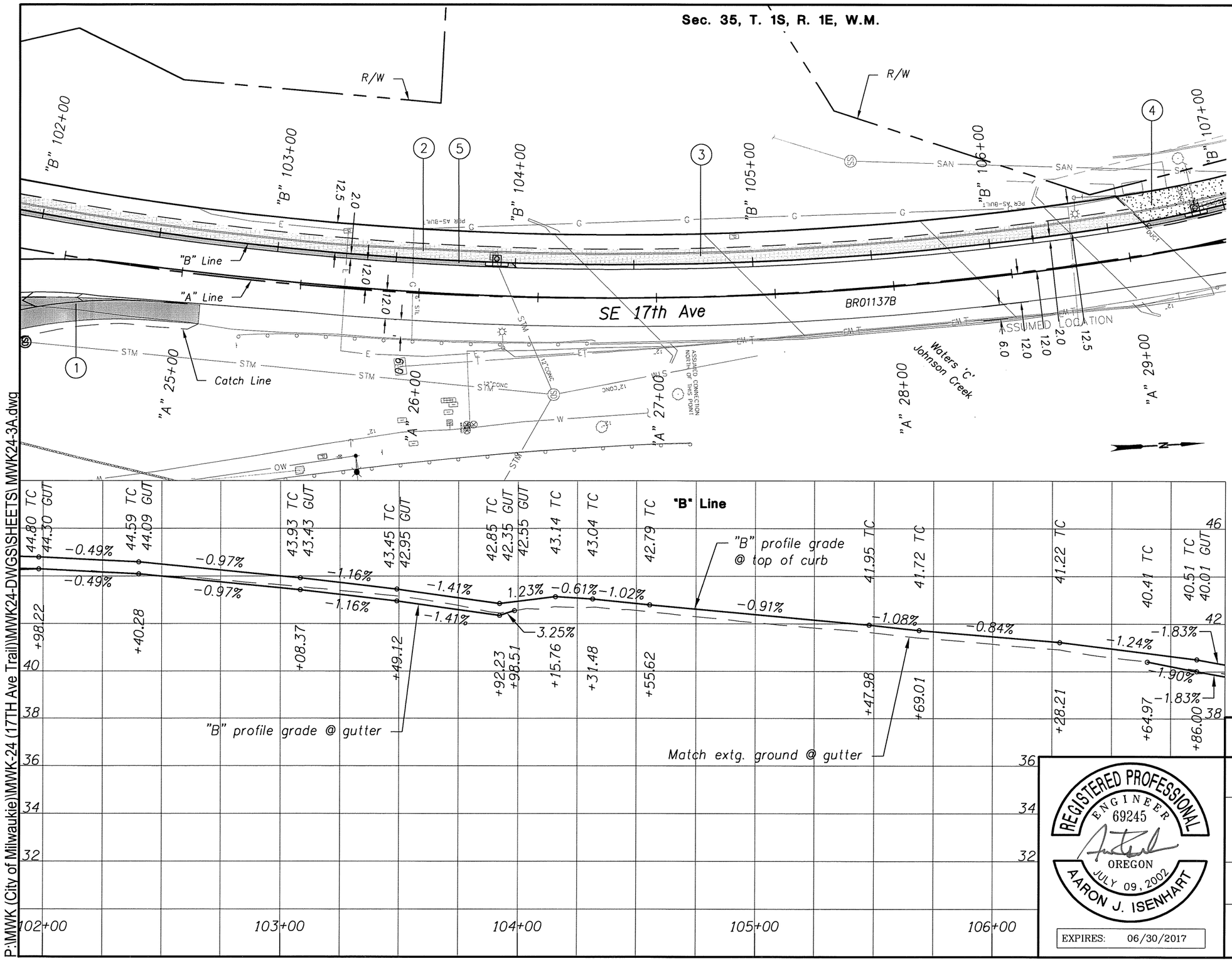

1. See sht. 3A, note 6
   Const. asph. conc. pavement
   Sawcut extg. asph. at match lines
2. See sht. 3A, note 5
   Sawcut and remove extg. sidewalk
   Const. P.C. conc. sidewalk widening
   (For details, see sht. 2B-8)
3. Sta. "B" 103+98.51 to Sta. "B" 106+64.97
   Sawcut and remove extg. sidewalk
   Const. P.C. conc. sidewalk widening
   (Structural pay item)
   (For details, see Bridge Plans)
4. Sawcut and remove extg. curb and sidewalk
   Const. P.C. conc. monolithic curb and sidewalk
   (See drg. no. RD720)
5. Const. asph. conc. pavement
   Sawcut extg. asph. at match lines

REGISTERED PROFESSIONAL ENGINEER 69245 OREGON JULY 09, 2002 AARON J. ISENHART

EXPIRES: 06/30/2017

OREGON DEPARTMENT OF TRANSPORTATION

Harper Houf Peterson Righellis Inc.
ENGINEERS • PLANNERS • LANDSCAPE ARCHITECTS • SURVEYORS
205 SE Spokane Street, Suite 200 Portland, OR 97202 phone: 503.221.1131 www.hhpr.com fax: 503.221.1171

17TH AVE TRAIL: SE OCHOCO - SE MCLOUGHLIN
CITY OF MILWAUKIE
CLACKAMAS COUNTY

REVIEWED BY AJI
DESIGNED BY KJO
DRAFTED BY KJO

GENERAL CONSTRUCTION

SHEET NO. 4A

P:\MWK (City of Milwaukie)\MWK-24 (17TH Ave Trail)\MWK24-DWGS\SHEETS\ MWK24-3A.dwg

49V-026

Sec. 35, T. 1S, R. 1E, W.M.

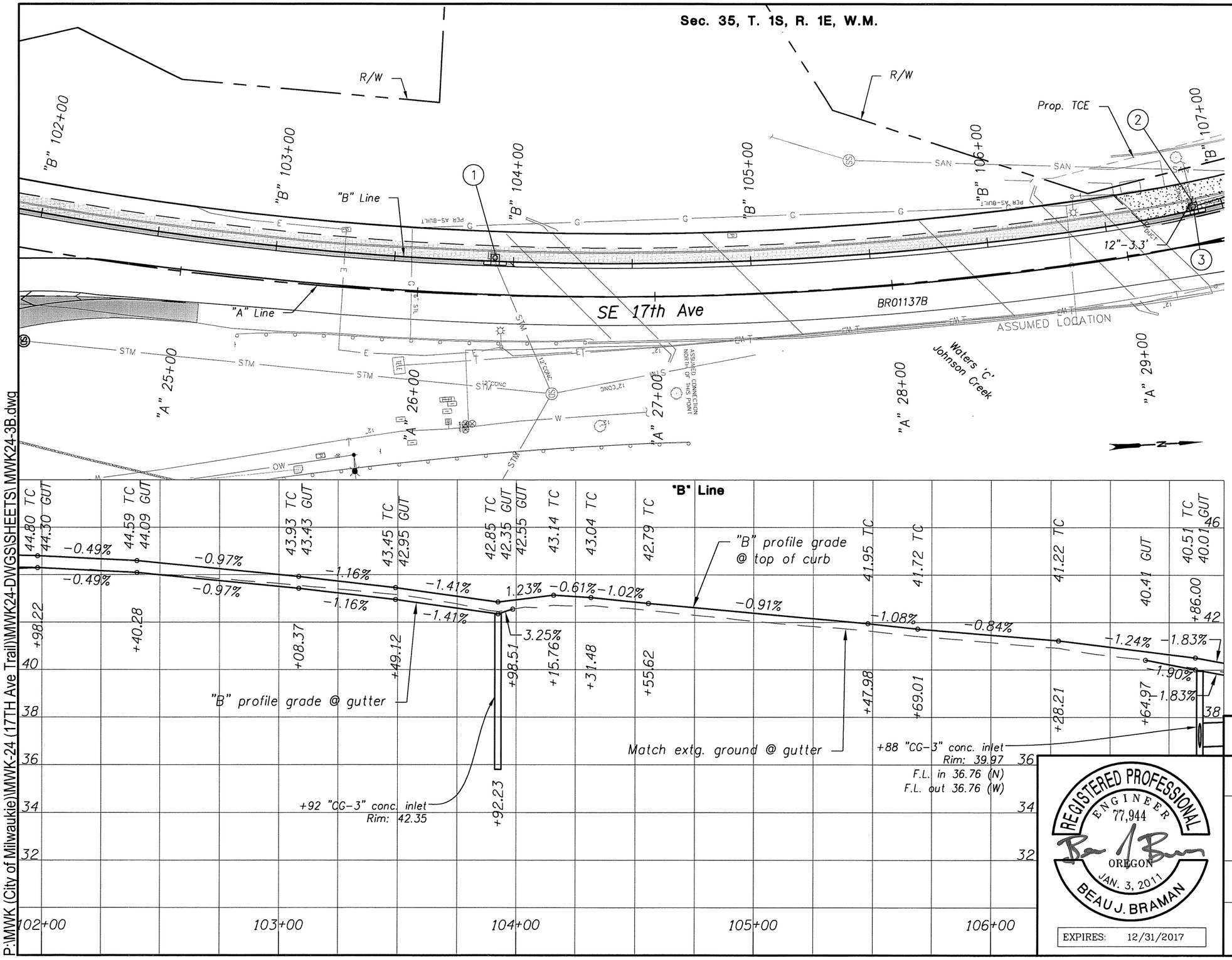

1 Sta. "B" 103+92.24, 0' Lt.
Remove extg. inlet
Const. type "CG-3" conc. inlet, option 1 inlet top
Rim elev. = 42.35
Lid elev. = 42.85
Sump depth = 12"
I.E. (12" out) – 37.30 (NE) Field verify
Connect to extg. storm sew. pipe
(See drg. nos. RD371 & RD372)

2 Sta. "B" 106+87.94, 2.9' Lt.
Remove extg. inlet
Inst. 12" storm sew. pipe – 3.3'
5' depth
S = 0.0200 ft./ft.
I.E. (12" in) – 36.69 (E) Field verify
I.E. (12" out) – 36.69 (W) Field verify
Connect to extg. storm sew. pipe with reinforced conc. closure collar
(See drg. nos. RD306, RD386, RD388, & RD393)

3 Sta. "B" 106+87.93, 0' Lt.
Const. type "CG-3" conc. inlet, option 1 inlet top
Rim elev. = 39.97
Sump depth = 12"
Inst. 12" ductile iron storm sew. pipe – 99.6'
5' depth
S = 0.0050 ft./ft.
I.E. (12" in) – 36.76 (N)
I.E. (12" out) – 36.76 (W)

Note

CG-3 inlet stations, offsets and rim elevations are to the center of the structure at the face of the curb at gutter elevation. All other structures are to the center of the structure. See standard drawings for any additional depression of gutterline at inlets.

REGISTERED PROFESSIONAL ENGINEER 77,944 OREGON JAN. 3, 2011 BEAU J. BRAMAN

EXPIRES: 12/31/2017

OREGON DEPARTMENT OF TRANSPORTATION

Harper Houf Peterson Righellis Inc.
ENGINEERS • PLANNERS • LANDSCAPE ARCHITECTS • SURVEYORS
205 SE Spokane Street, Suite 200 Portland, OR 97202 phone: 503.221.1131 www.hhpr.com fax: 503.221.1171

17TH AVE TRAIL: SE OCHOCO - SE MCLOUGHLIN
CITY OF MILWAUKIE
CLACKAMAS COUNTY

REVIEWED BY AJI
DESIGNED BY BJB
DRAFTED BY KJO

DRAINAGE & UTILITIES

SHEET NO. 4B

P:\MWK (City of Milwaukie)\MWK-24 (17TH Ave Trail)\MWK24-DWGS\SHEETS\ MWK24-3B.dwg

Sec. 26, T. 1S, R. 1E, W.M.

49V-026

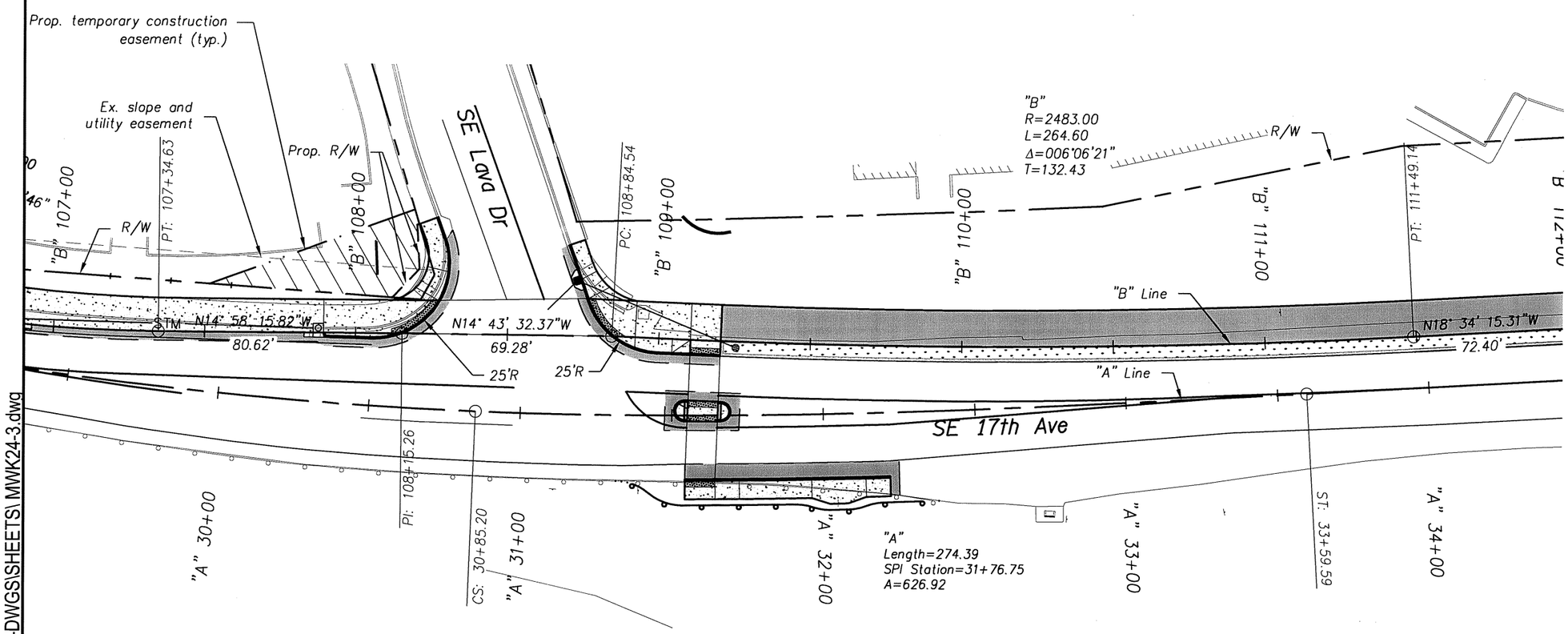

P:\MWK (City of Milwaukie)\MWK-24 (17TH Ave Trail)\MWK24-DWGS\SHEETS\ MWK24-3.dwg

OREGON DEPARTMENT OF TRANSPORTATION

REGISTERED PROFESSIONAL ENGINEER 69245 OREGON JULY 09, 2002 AARON J. ISENHART

EXPIRES: 06/30/2017

Harper Houf Peterson Righellis Inc.
ENGINEERS • PLANNERS • LANDSCAPE ARCHITECTS • SURVEYORS
205 SE Spokane Street, Suite 200 Portland, OR 97202 phone: 503.221.1131 www.hhpr.com fax: 503.221.1171

17TH AVE TRAIL: SE OCHOCO - SE MCLOUGHLIN
CITY OF MILWAUKIE
CLACKAMAS COUNTY

REVIEWED BY AJI
DESIGNED BY KJO
DRAFTED BY KJO

ALIGNMENT AND RIGHT OF WAY PLAN

SHEET NO. 5

Sec. 26, T. 1S, R. 1E, W.M.

49V-026

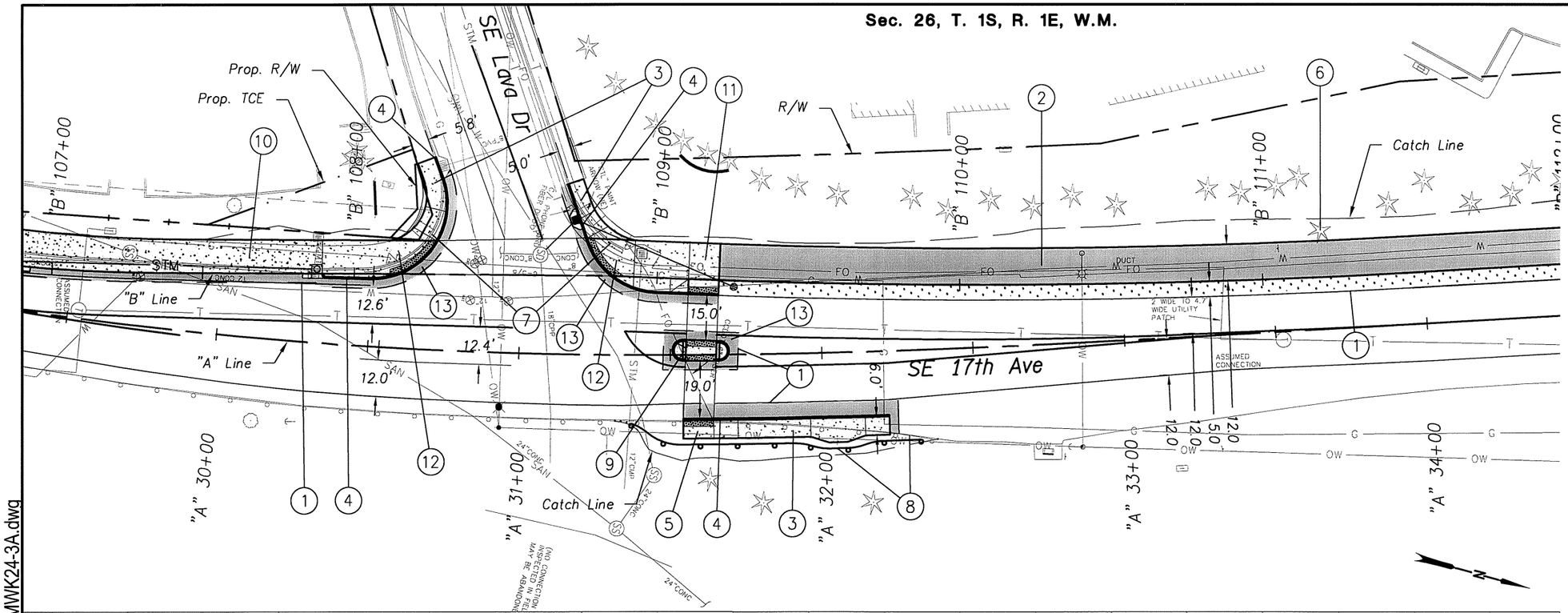

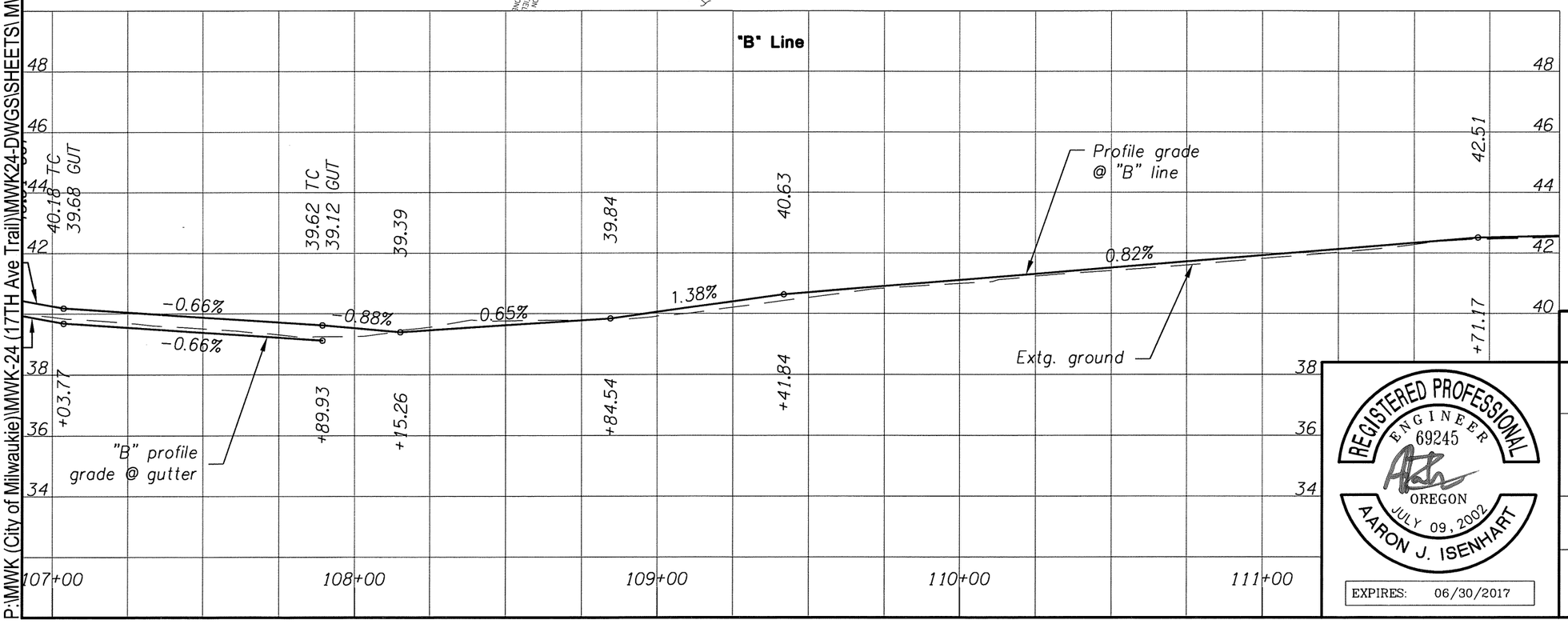

1. Sawcut and remove asph. pavement and P.C. conc. sidewalk
2. Const. pervious asph. path
3. Const. P.C. conc. sidewalk
4. Const. standard curb (See drg. no. RD700)
5. Const. P.C. conc. sidewalk ramp (For details, see sht. 2F-4)
6. Remove trees within grading limits
7. Remove extg. curb
8. Sta. "A" 31+31.93 to Sta. "A" 31+37.34
   Remove guardrail
   Const. guardrail - 87.5' (Type 2A)
   Const. guardrail terminal, non-flared
   Test level 2
   (See drg. nos. RD400, RD405, RD415, & RD420)
9. Const. type "A" conc. island, mountable (Lowered island design) (For details, see sht. 2F-4) (See drg. nos. RD705 & RD710)
10. See sht. 4A, note 4
    Sawcut and remove extg. curb and sidewalk
    Const. P.C. conc. monolithic curb and sidewalk
11. Const. P.C. conc. sidewalk ramp
    Const. aggregate shldr.
    (For details, see sht. 2B-7 & 2E)
    (See drg. no. RD755)
12. Const. P.C. conc. sidewalk ramp (For details, see sht. 2E) (See drg. no. RD755)
13. Const. asph. conc. pavement
    Sawcut extg. asph. at match lines
    (For details, see sht. 2B-7)

REGISTERED PROFESSIONAL ENGINEER 69245 OREGON JULY 09, 2002 AARON J. ISENHART

EXPIRES: 06/30/2017

OREGON DEPARTMENT OF TRANSPORTATION

Harper Houf Peterson Righellis Inc.
ENGINEERS • PLANNERS • LANDSCAPE ARCHITECTS • SURVEYORS
205 SE Spokane Street, Suite 200 Portland, OR 97202 phone: 503.221.1131 www.hhpr.com fax: 503.221.1171

17TH AVE TRAIL: SE OCHOCO - SE MCLOUGHLIN
CITY OF MILWAUKIE
CLACKAMAS COUNTY

REVIEWED BY AJI
DESIGNED BY KJO
DRAFTED BY KJO

GENERAL CONSTRUCTION

SHEET NO. 5A

P:\MWK (City of Milwaukie)\MWK-24 (17TH Ave Trail)\MWK24-DWGS\SHEETS\ MWK24-3A.dwg

Sec. 26, T. 1S, R. 1E, W.M.

49V-026

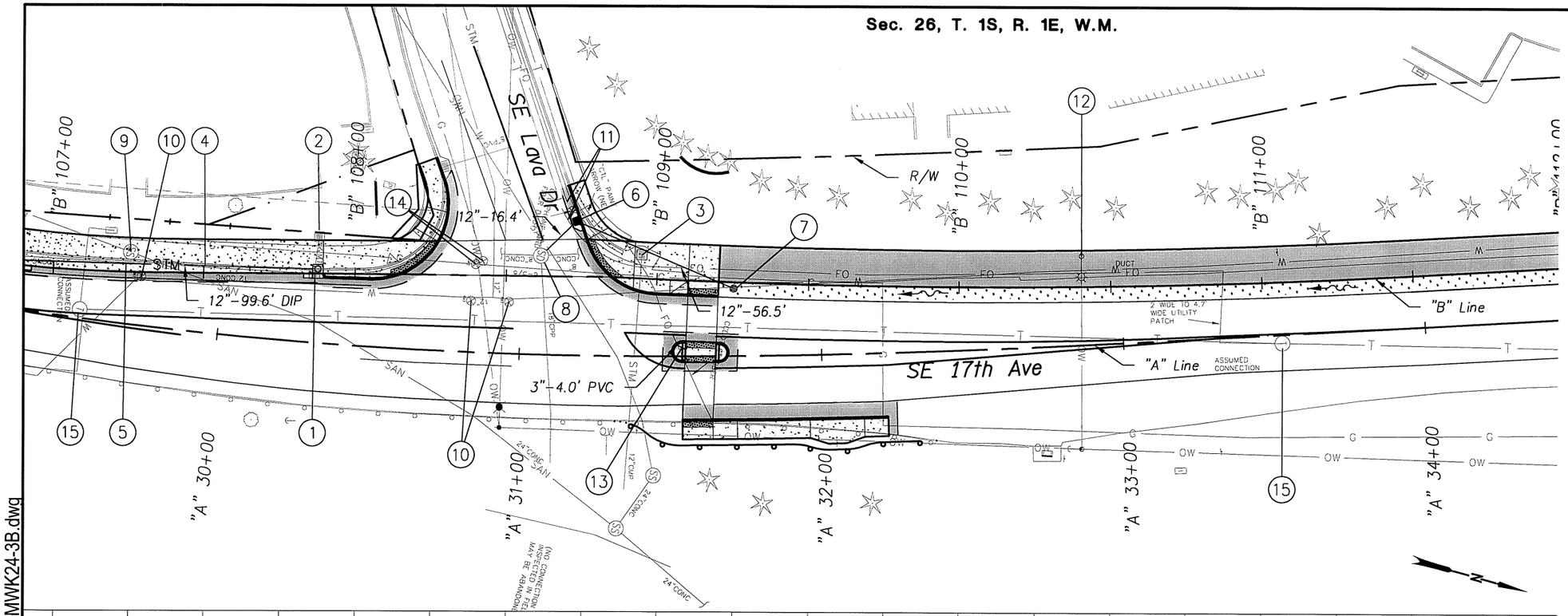

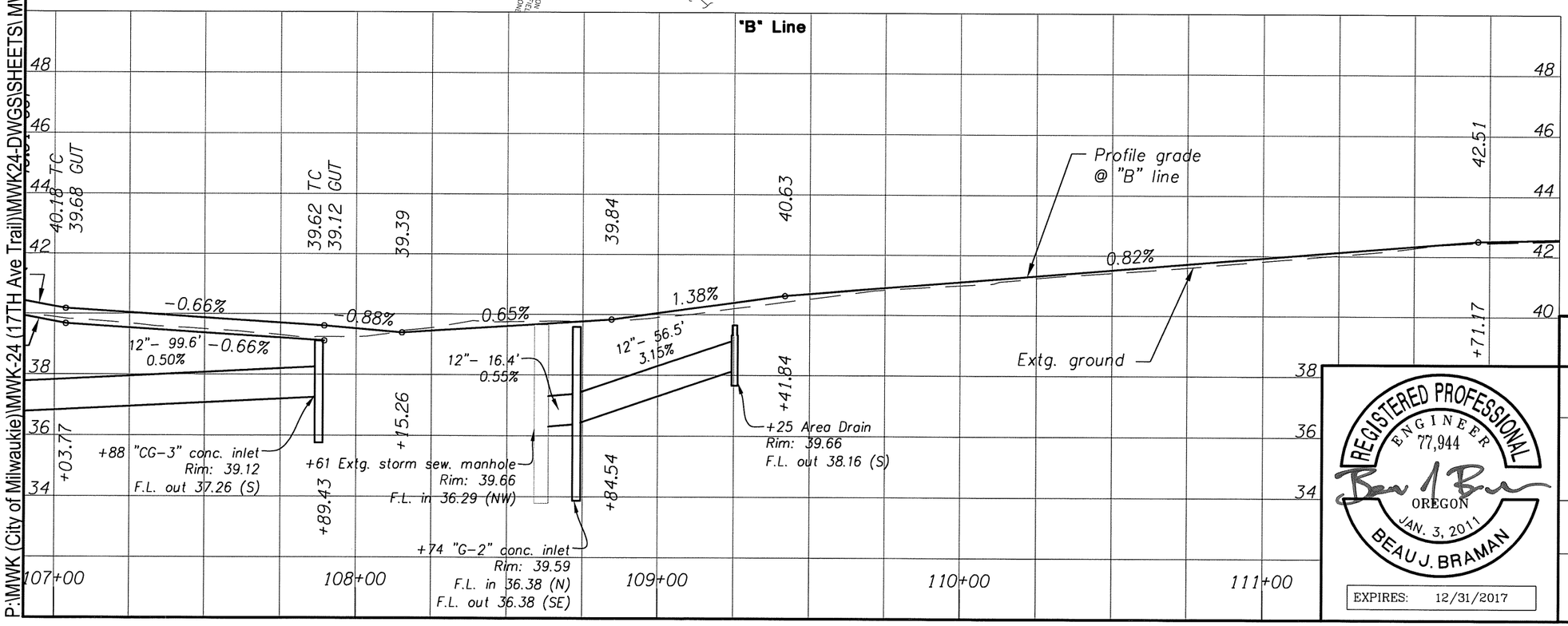

Note

G-2 & CG-3 inlet stations, offsets and rim elevations are to the center of the structure at the face of the curb at gutter elevation. All other structures are to the center of the structure. See standard drawings for any additional depression of gutterline at inlets.

REGISTERED PROFESSIONAL ENGINEER 77,944 OREGON JAN. 3, 2011 BEAU J. BRAMAN

EXPIRES: 12/31/2017

OREGON DEPARTMENT OF TRANSPORTATION

Harper Houf Peterson Righellis Inc.
ENGINEERS • PLANNERS • LANDSCAPE ARCHITECTS • SURVEYORS
205 SE Spokane Street, Suite 200 Portland, OR 97202 phone: 503.221.1131 www.hhpr.com fax: 503.221.1171

17TH AVE TRAIL: SE OCHOCO - SE MCLOUGHLIN
CITY OF MILWAUKIE
CLACKAMAS COUNTY

REVIEWED BY AJI
DESIGNED BY BJB
DRAFTED BY KJO

DRAINAGE & UTILITIES

SHEET NO. 5B

P:\MWK (City of Milwaukie)\MWK-24 (17TH Ave Trail)\MWK24-DWGS\SHEETS\ MWK24-3B.dwg

(1) Sta. "B" 107+87.68, 0' Lt.
Remove extg. storm sew. and inlet
Const. type "CG-3" conc. inlet, option 1 inlet top
Rim elev. = 39.12
Lid elev. = 39.62
Sump depth = 12"
I.E. (12" out) - 37.26 (S)

(2) Sta. "B" 107+88.12, 12.2' Lt.
Remove extg. storm sew. and inlet

(3) Sta. "B" 108+94.58, 7.8' Lt.
Remove extg. storm inlet
Plug and abandon extg. storm sew.

(4) Sta. "B" 106+87.92 to Sta. "B" 107+86.43
Remove extg. storm sew. pipe

(5) See sht. 4B, note 3
Inst. 12" storm sew. pipe

(6) Sta. "B" 108+74.07, 18.6' Lt.
Const. type "G-2" (modified) catchbasin - flow through
Rim elev. = 39.59
Sump depth = 24"
Inst. 12" storm sew. pipe - 56.5'
5' depth
S = 0.0315 ft./ft.
I.E. (12" in) - 36.38 (N)
I.E. (12" out) - 36.38 (SE)
(For details, see sht. 2B-3, 2B-4 and 2B-5)

(7) Sta. "B" 109+25.36, 2.0' Rt.
Const. conc. inlet, type area drain
Rim elev. = 39.66
Sump depth = 0"
I.E. (12" out) - 38.16 (S)
(For details, see sht. 2B)

(8) Minor adjust storm sew. manhole
Sta "B" 108+61.39, 6.7' Lt.
Rim elev. = 39.66
Inst. 12" storm sew. pipe - 16.4'
5' depth
S = 0.0055 ft./ft.
I.E. (12" in) - 36.29
Connect to extg. storm sew. manhole
Trench Resurf. - 7.29 sq. yd.
(See drg. no. RD360)

(9) Minor adjust manhole

(10) Adjust water valve - 3

(11) Relocate telephone or fiber optic (by others) - 2

(12) Relocate utility pole (by others)

(13) Inst. 3" PVC pipe - 4.0'
5' depth
S = 0.0125 ft./ft.

(14) Adjust gas vale (by others) - 2

(15) Minor adjust manhole (by others) - 2

REGISTERED PROFESSIONAL ENGINEER 77,944 OREGON JAN. 3, 2011 BEAU J. BRAMAN

EXPIRES: 12/31/2017

OREGON DEPARTMENT OF TRANSPORTATION

Harper Houf Peterson Righellis Inc.
ENGINEERS • PLANNERS • LANDSCAPE ARCHITECTS • SURVEYORS
205 SE Spokane Street, Suite 200 Portland, OR 97202 phone: 503.221.1131 www.hhpr.com fax: 503.221.1171

17TH AVE TRAIL: SE OCHOCO - SE MCLOUGHLIN
CITY OF MILWAUKIE
CLACKAMAS COUNTY

REVIEWED BY AJI
DESIGNED BY BJB
DRAFTED BY KJO

DRAINAGE & UTILITIES

SHEET NO. 5B-2

P:\MWK (City of Milwaukie)\MWK-24 (17TH Ave Trail)\MWK24-DWGS\SHEETS\ MWK24-3B.dwg

Sec. 26, T. 1S, R. 1E, W.M.

49V-026

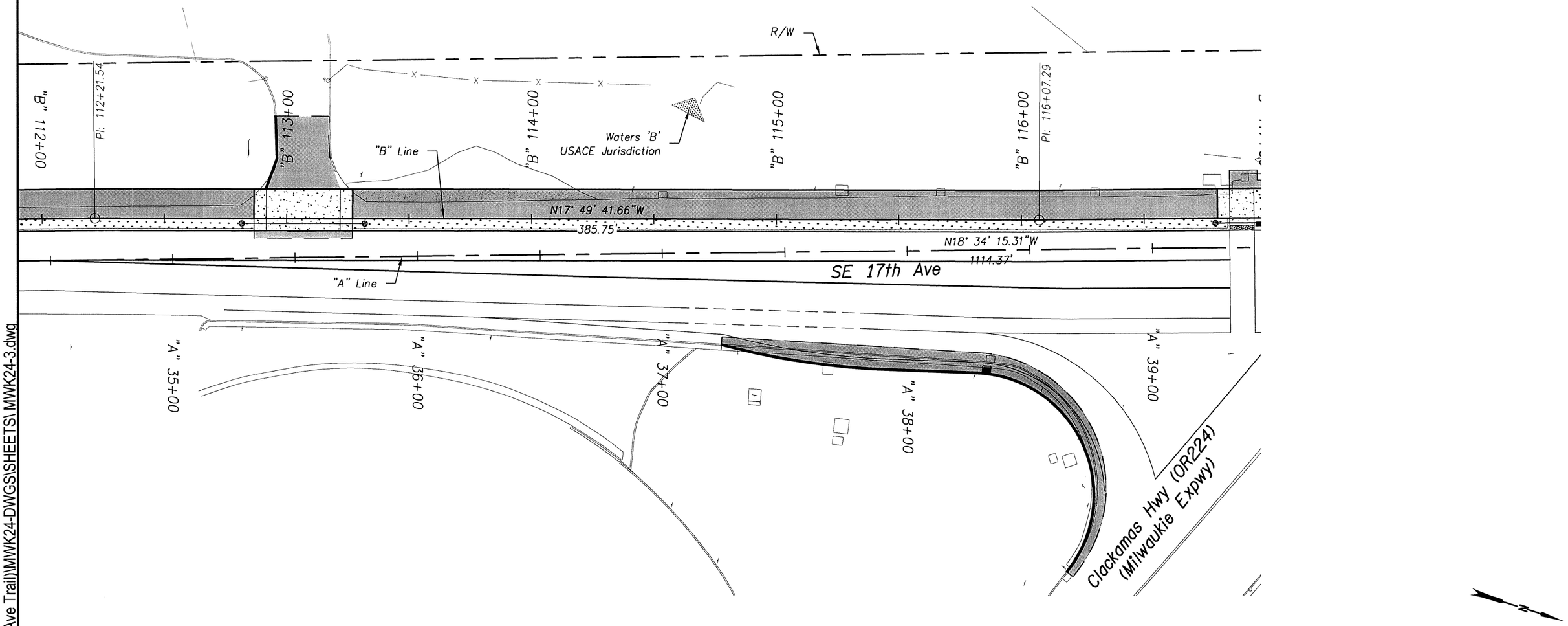

P:\MWK (City of Milwaukie)\MWK-24 (17TH Ave Trail)\MWK24-DWGS\SHEETS\ MWK24-3.dwg

REGISTERED PROFESSIONAL ENGINEER
69245
OREGON
JULY 09, 2002
AARON J. ISENHART

EXPIRES: 06/30/2017

OREGON DEPARTMENT OF TRANSPORTATION

Harper Houf Peterson Righellis Inc.
ENGINEERS • PLANNERS • LANDSCAPE ARCHITECTS • SURVEYORS
205 SE Spokane Street, Suite 200 Portland, OR 97202 phone: 503.221.1131 www.hhpr.com fax: 503.221.1171

17TH AVE TRAIL: SE OCHOCO - SE MCLOUGHLIN
CITY OF MILWAUKIE
CLACKAMAS COUNTY

REVIEWED BY AJI
DESIGNED BY KJO
DRAFTED BY KJO

ALIGNMENT AND RIGHT OF WAY PLAN

SHEET NO. 6

49V-026

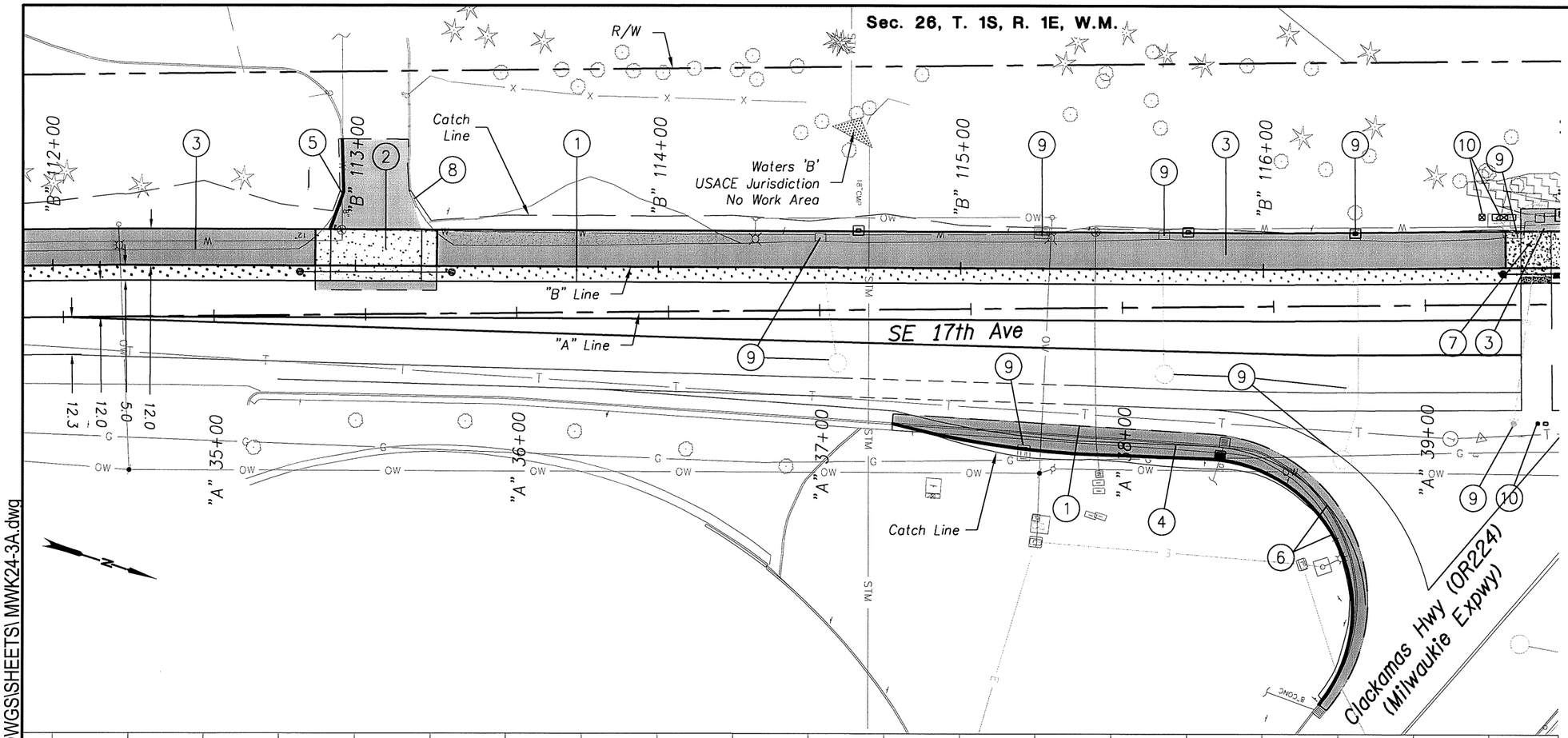

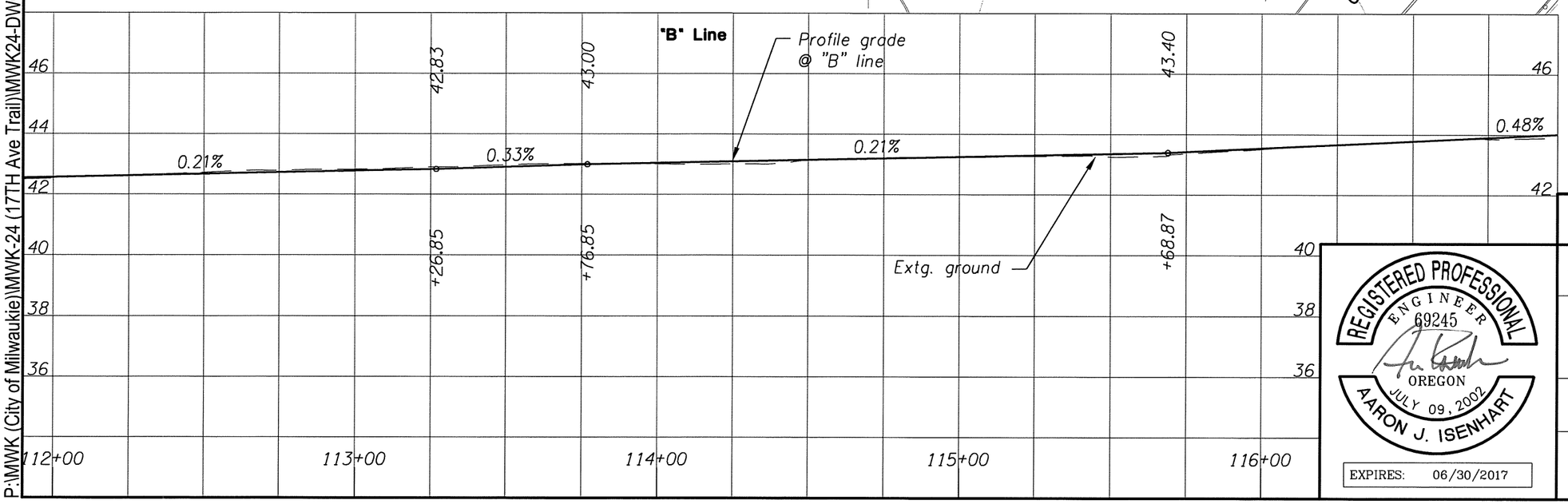

1. Sawcut and remove asph. pavement
2. Sta. "B" 113+06.85
   Const. P.C. conc. dwy., option J modified
   Const. asph. conc. connection
   (For details, see shts. 2B-6 and 2F)
   (See drg. nos. RD715 & RD740)
3. Const. pervious asph. path
4. Const. asph. conc. pavement
   Sawcut and remove extg. asph. conc. pavement
5. Remove extg. curb
   Const. standard curb
   (For details, see sht. 2F)
6. Remove extg. curb
   Const. standard curb
   (For details, see sht. 2E-2)
7. Const. P.C. conc. sidewalk ramp
   Const. aggregate shldr.
   (For details, see sht. 2B-7 & 2F-5)
8. Remove extg. curb
   (For details, see sht. 2F)
9. Extg. traffic signal equipment
   See signal plans
10. Prop. traffic signal equipment
    See signal plans

REGISTERED PROFESSIONAL ENGINEER
69245
OREGON
JULY 09, 2002
AARON J. ISENHART
EXPIRES: 06/30/2017

OREGON DEPARTMENT OF TRANSPORTATION

Harper Houf Peterson Righellis Inc.
ENGINEERS • PLANNERS • LANDSCAPE ARCHITECTS • SURVEYORS
205 SE Spokane Street, Suite 200 Portland, OR 97202 phone: 503.221.1131 www.hhpr.com fax: 503.221.1171

17TH AVE TRAIL: SE OCHOCO - SE MCLOUGHLIN
CITY OF MILWAUKIE
CLACKAMAS COUNTY

REVIEWED BY AJI
DESIGNED BY KJO
DRAFTED BY KJO

GENERAL CONSTRUCTION

SHEET NO. 6A

P:\MWK (City of Milwaukie)\MWK-24 (17TH Ave Trail)\MWK24-DWGS\SHEETS\MWK24-3A.dwg

Sec. 26, T. 1S, R. 1E, W.M.

49V-026

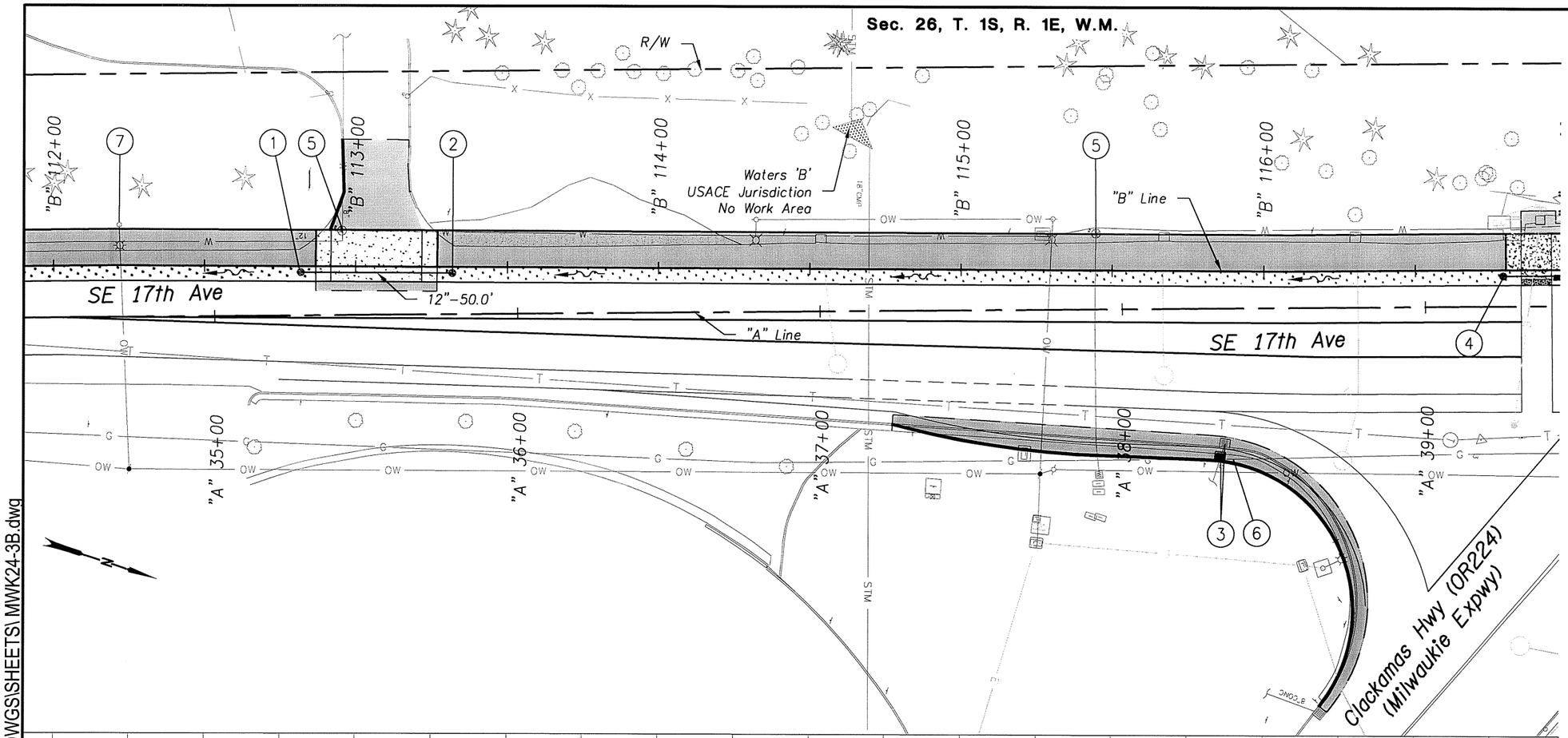

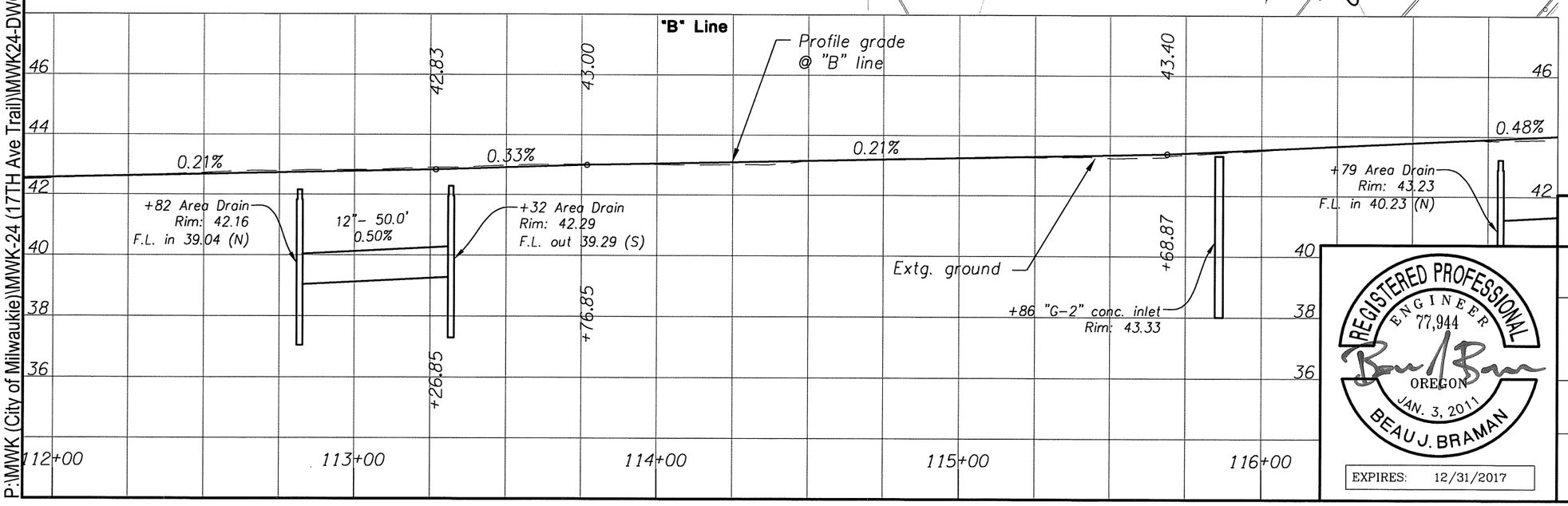

1. Sta. "B" 112+81.85, 2.0' Rt.
   Const. conc. inlet, type area drain
   Rim elev. = 42.16
   Sump depth = 18"
   Inst. 12" storm sew. pipe – 50.0'
   5' depth
   S = 0.0050 ft./ft.
   I.E. (12" in) – 39.04 (N)
   (For details, see sht. 2B)

2. Sta. "B" 113+31.85, 2.0' Rt.
   Const. conc. inlet, type area drain
   Rim elev. = 42.29
   Sump depth = 18"
   I.E. (12" out) – 39.29 (S)
   (For details, see sht. 2B)

3. Sta. "B" 115+85.87, 62.5' Rt.
   Remove extg. inlet
   Const. type "G-2" conc. inlet
   Rim elev. = 43.33
   Sump depth = 12"
   I.E. (10" out) – 40.56 (E) Field verify
   Connect to extg. storm sew. pipe

4. Sta. "B" 116+79.14, 2.0' Rt.
   Const. conc. inlet, type area drain
   Rim elev. = 43.23
   Sump depth = 18"
   Inst. 12" storm sew. pipe – 139.9'
   5' depth
   S = 0.0052 ft./ft.
   I.E. (12" in) – 40.23 (N)
   Trench Resurf. – 62.18 sq. yd.
   (For details, see sht. 2B)

5. Adjust water valve – 2

6. Relocate gas main (by others)

7. Relocate utility pole (by others)

Note

G-2 inlet stations, offsets and rim elevations are to the center of the structure at the face of the curb at gutter elevation. All other structures are to the center of the structure. See standard drawings for any additional depression of gutterline at inlets.

REGISTERED PROFESSIONAL ENGINEER 77,944 OREGON JAN. 3, 2011 BEAU J. BRAMAN

EXPIRES: 12/31/2017

OREGON DEPARTMENT OF TRANSPORTATION

Harper Houf Peterson Righellis Inc.
ENGINEERS • PLANNERS • LANDSCAPE ARCHITECTS • SURVEYORS
205 SE Spokane Street, Suite 200 Portland, OR 97202 phone: 503.221.1131 www.hhpr.com fax: 503.221.1171

17TH AVE TRAIL: SE OCHOCO - SE MCLOUGHLIN
CITY OF MILWAUKIE
CLACKAMAS COUNTY

REVIEWED BY AJI
DESIGNED BY BJB
DRAFTED BY KJO

DRAINAGE & UTILITIES

SHEET NO. 6B

P:\MWK (City of Milwaukie)\MWK-24 (17TH Ave Trail)\MWK24-DWGS\SHEETS\MWK24-3B.dwg

Sec. 26, T. 1S, R. 1E, W.M.

49V-026

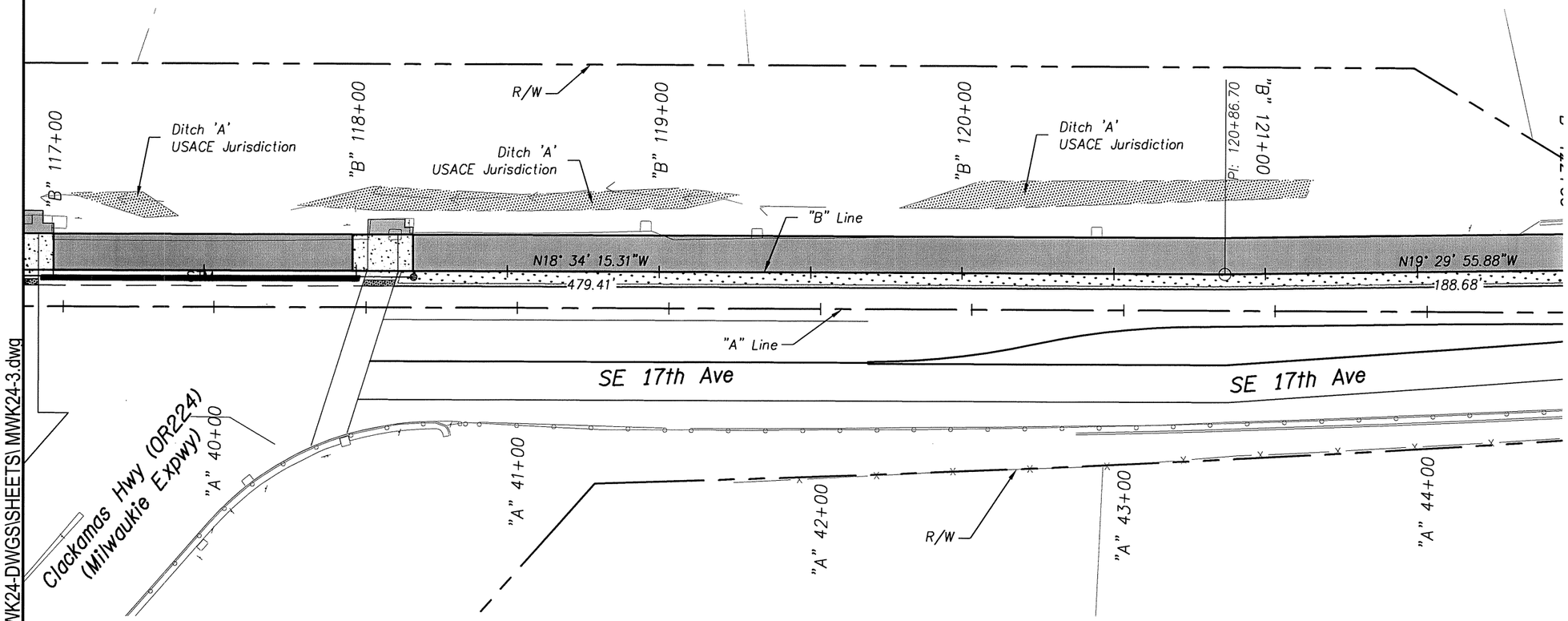

P:\MWK (City of Milwaukie)\MWK-24 (17TH Ave Trail)\MWK24-DWGS\SHEETS\ MWK24-3.dwg

REGISTERED PROFESSIONAL ENGINEER
69245
OREGON
JULY 09, 2002
AARON J. ISENHART

EXPIRES: 06/30/2017

OREGON DEPARTMENT OF TRANSPORTATION

Harper Houf Peterson Righellis Inc.
ENGINEERS • PLANNERS • LANDSCAPE ARCHITECTS • SURVEYORS
205 SE Spokane Street, Suite 200 Portland, OR 97202 phone: 503.221.1131 www.hhpr.com fax: 503.221.1171

17TH AVE TRAIL: SE OCHOCO - SE MCLOUGHLIN
CITY OF MILWAUKIE
CLACKAMAS COUNTY

REVIEWED BY AJI
DESIGNED BY KJO
DRAFTED BY KJO

ALIGNMENT AND RIGHT OF WAY PLAN

SHEET NO. 7

Sec. 26, T. 1S, R. 1E, W.M.

49V-026

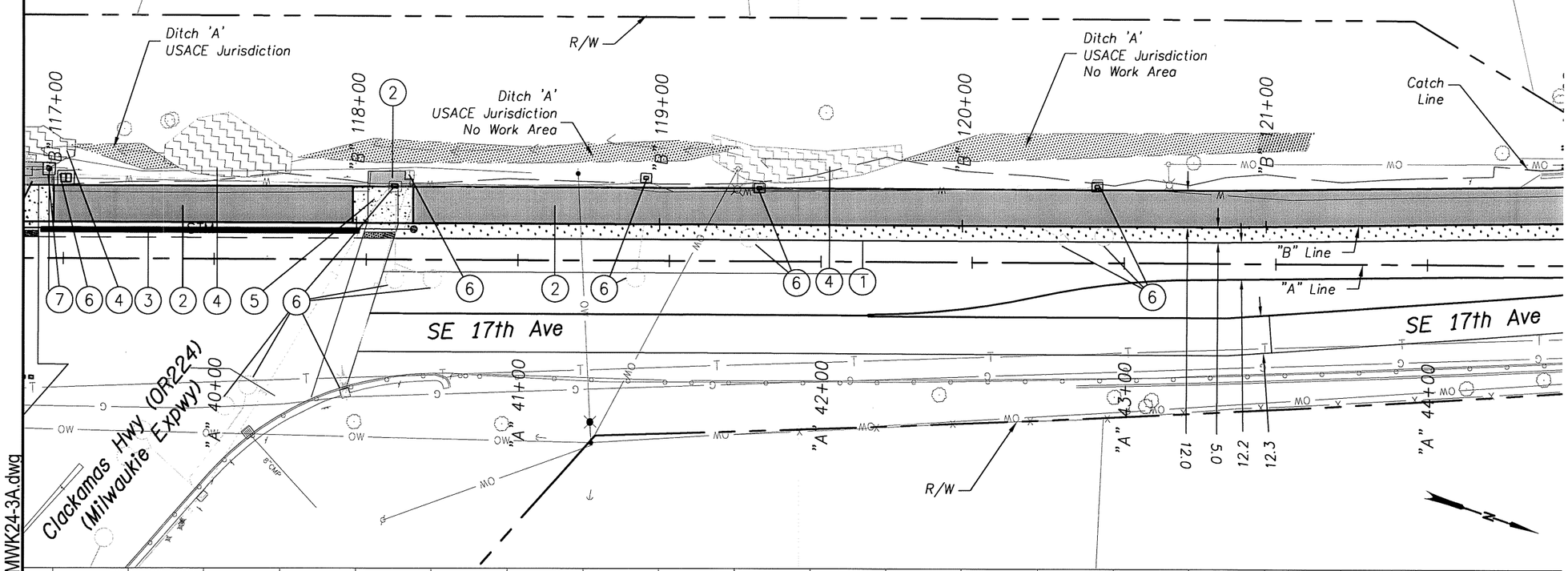

1. Sawcut and remove asph. pavement
2. Const. pervious asph. path
3. Sta. "B" 116+96.00 to Sta. "B" 118+01.00
   Const. type "B" traffic separator
   (See drg. no RD706)
4. Remove rockfall debris
   (For details, see sht. 2B-7)
5. Const. P.C. conc. sidewalk ramp
   Const. aggregate shldr.
   (For details, see sht. 2B-7 & 2F-5)
6. Extg. traffic signal equipment
   (See signal plans)
7. Prop. traffic signal equipment
   (See signal plans)

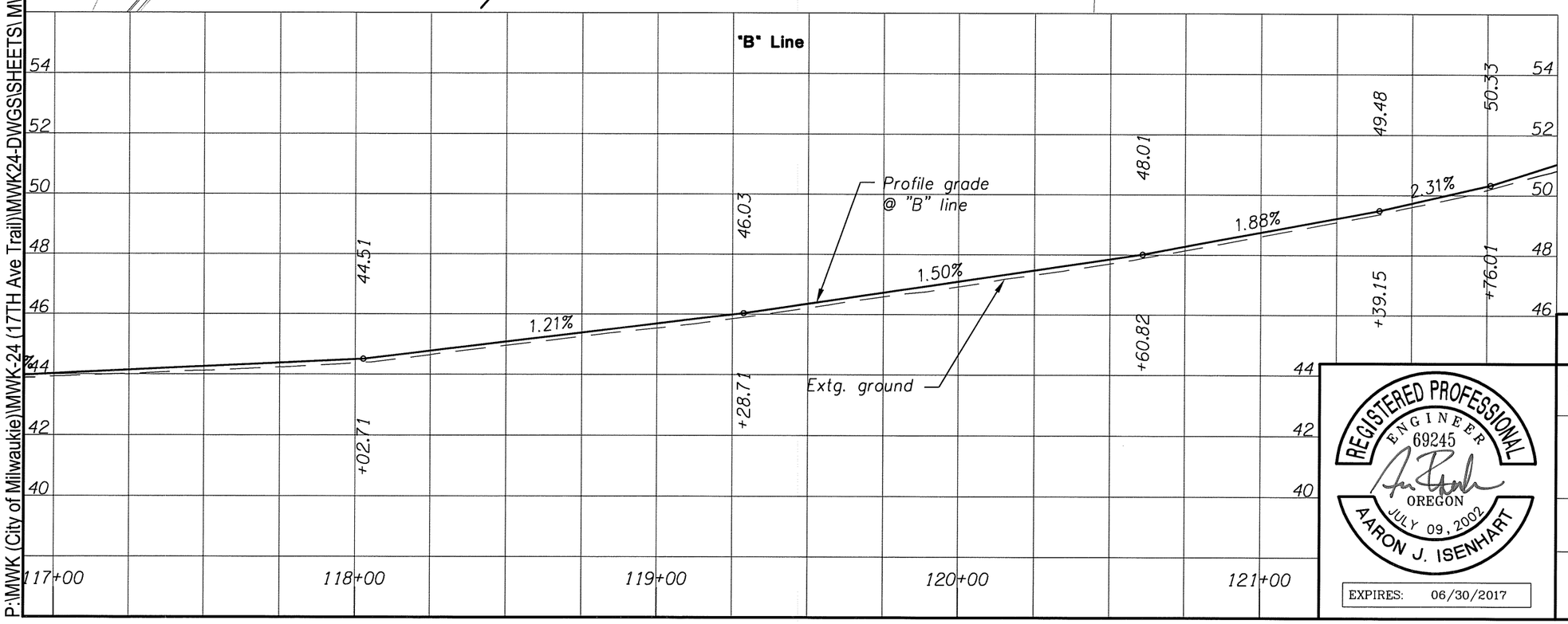

P:\MWK (City of Milwaukie)\MWK-24 (17TH Ave Trail)\MWK24-DWGS\SHEETS\ MWK24-3A.dwg

REGISTERED PROFESSIONAL ENGINEER
69245
OREGON
JULY 09, 2002
AARON J. ISENHART
EXPIRES: 06/30/2017

OREGON DEPARTMENT OF TRANSPORTATION

Harper Houf Peterson Righellis Inc.
ENGINEERS • PLANNERS • LANDSCAPE ARCHITECTS • SURVEYORS
205 SE Spokane Street, Suite 200 Portland, OR 97202 phone: 503.221.1131 www.hhpr.com fax: 503.221.1171

17TH AVE TRAIL: SE OCHOCO - SE MCLOUGHLIN
CITY OF MILWAUKIE
CLACKAMAS COUNTY

REVIEWED BY AJI
DESIGNED BY KJO
DRAFTED BY KJO

GENERAL CONSTRUCTION

SHEET NO. 7A

Sec. 26, T. 1S, R. 1E, W.M.

49V-026

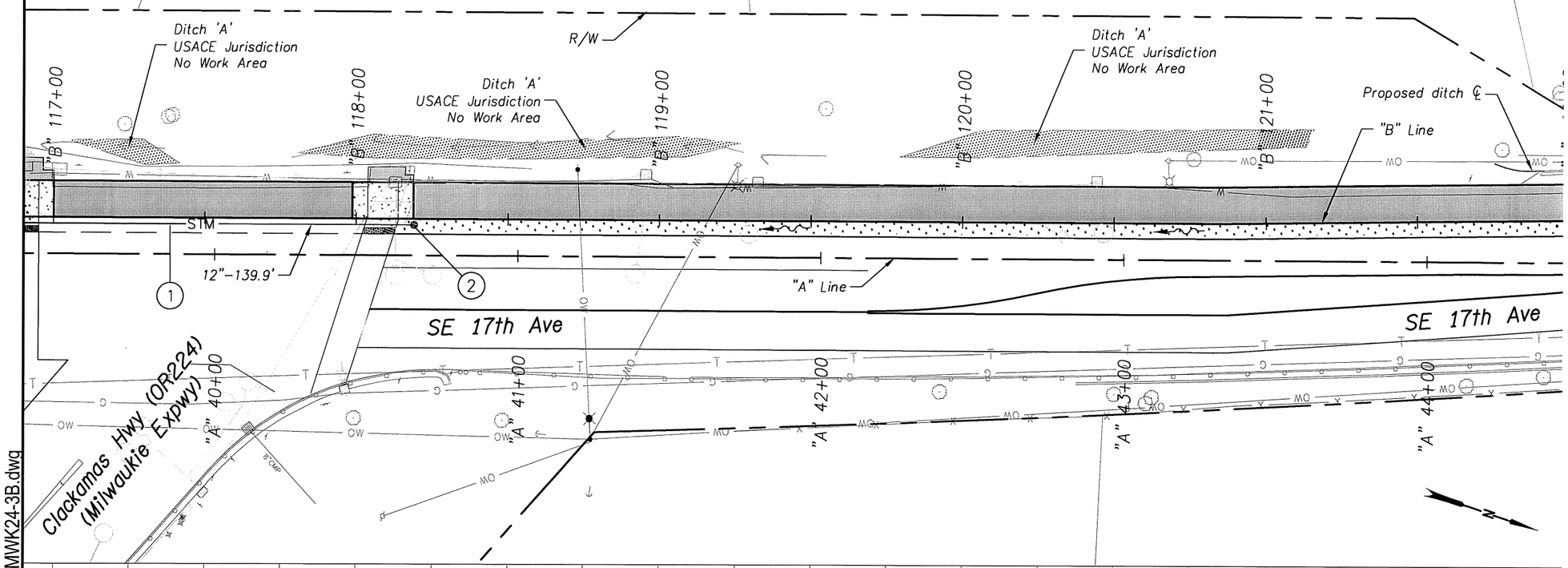

1 See sht. 6B, note 4
Inst. 12" storm sew. pipe

2 Sta. "B" 118+19.05, 2.0' Rt.
Const. conc. inlet, type area drain
Rim elev. = 43.96
Sump depth = 18"
I.E. (12" out) – 40.96 (S)
(For details, see sht. 2B)

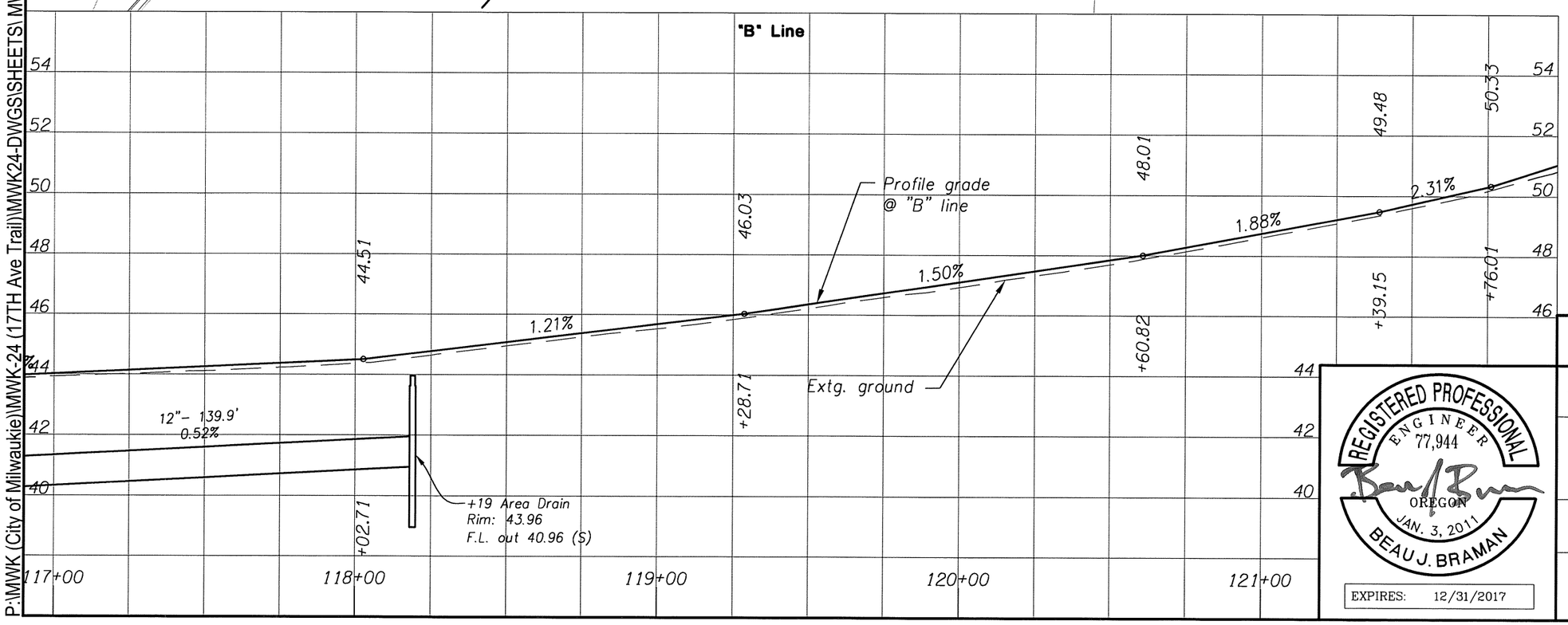

Note

G–2 inlet stations, offsets and rim elevations are to the center of the structure at the face of the curb at gutter elevation. All other structures are to the center of the structure. See standard drawings for any additional depression of gutterline at inlets.

REGISTERED PROFESSIONAL ENGINEER 77,944 OREGON JAN. 3, 2011 BEAU J. BRAMAN

EXPIRES: 12/31/2017

OREGON DEPARTMENT OF TRANSPORTATION

Harper Houf Peterson Righellis Inc.
ENGINEERS • PLANNERS • LANDSCAPE ARCHITECTS • SURVEYORS
205 SE Spokane Street, Suite 200 Portland, OR 97202 phone: 503.221.1131 www.hhpr.com fax: 503.221.1171

17TH AVE TRAIL: SE OCHOCO - SE MCLOUGHLIN
CITY OF MILWAUKIE
CLACKAMAS COUNTY

REVIEWED BY AJI
DESIGNED BY BJB
DRAFTED BY KJO

DRAINAGE & UTILITIES

SHEET NO. 7B

P:\MWK (City of Milwaukie)\MWK-24 (17TH Ave Trail)\MWK24-DWGS\SHEETS\ MWK24-3B.dwg

Sec. 26, T. 1S, R. 1E, W.M.

49V-026

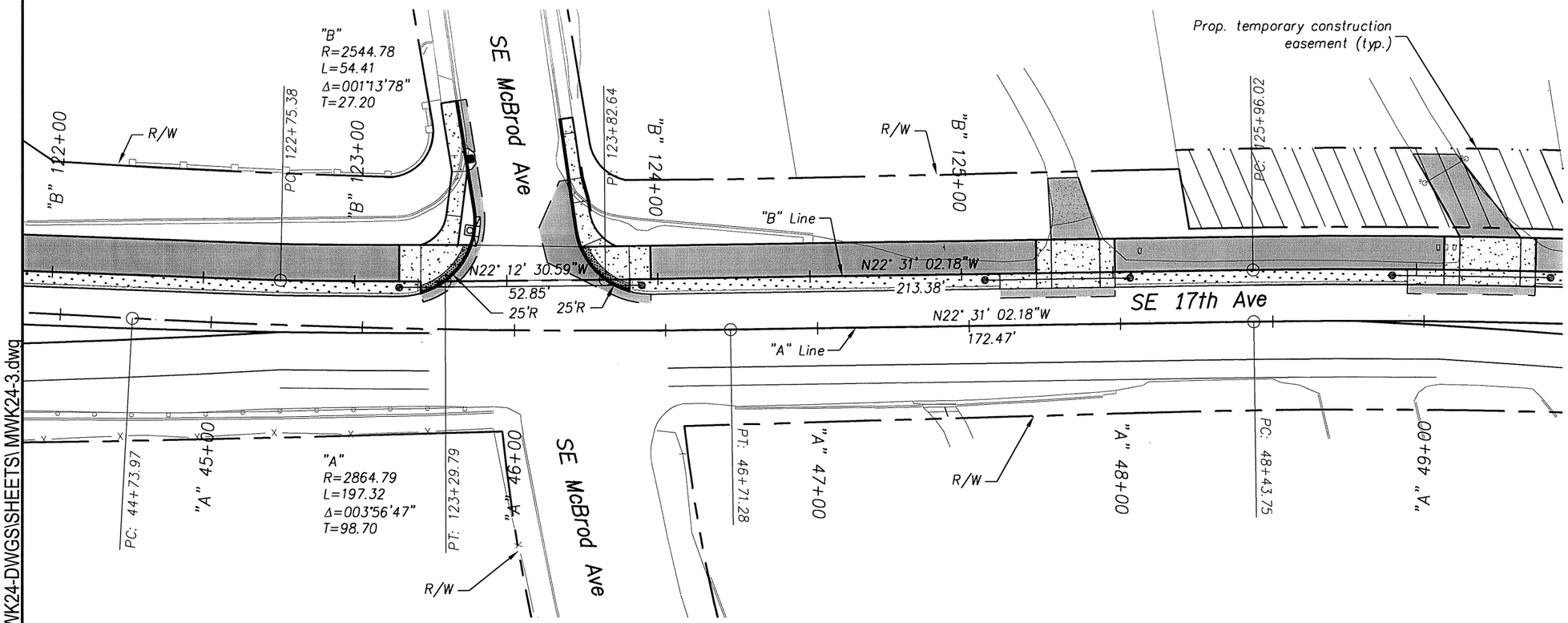

P:\MWK (City of Milwaukie)\MWK-24 (17TH Ave Trail)\MWK24-DWGS\SHEETS\ MWK24-3.dwg

OREGON DEPARTMENT OF TRANSPORTATION

REGISTERED PROFESSIONAL ENGINEER 69245 OREGON JULY 09, 2002 AARON J. ISENHART

EXPIRES: 06/30/2017

Harper Houf Peterson Righellis Inc.
ENGINEERS • PLANNERS • LANDSCAPE ARCHITECTS • SURVEYORS
205 SE Spokane Street, Suite 200 Portland, OR 97202 phone: 503.221.1131 www.hhpr.com fax: 503.221.1171

17TH AVE TRAIL: SE OCHOCO - SE MCLOUGHLIN
CITY OF MILWAUKIE
CLACKAMAS COUNTY

REVIEWED BY AJI
DESIGNED BY KJO
DRAFTED BY KJO

ALIGNMENT AND RIGHT OF WAY PLAN

SHEET NO. 8

Sec. 26, T. 1S, R. 1E, W.M.

49V-026

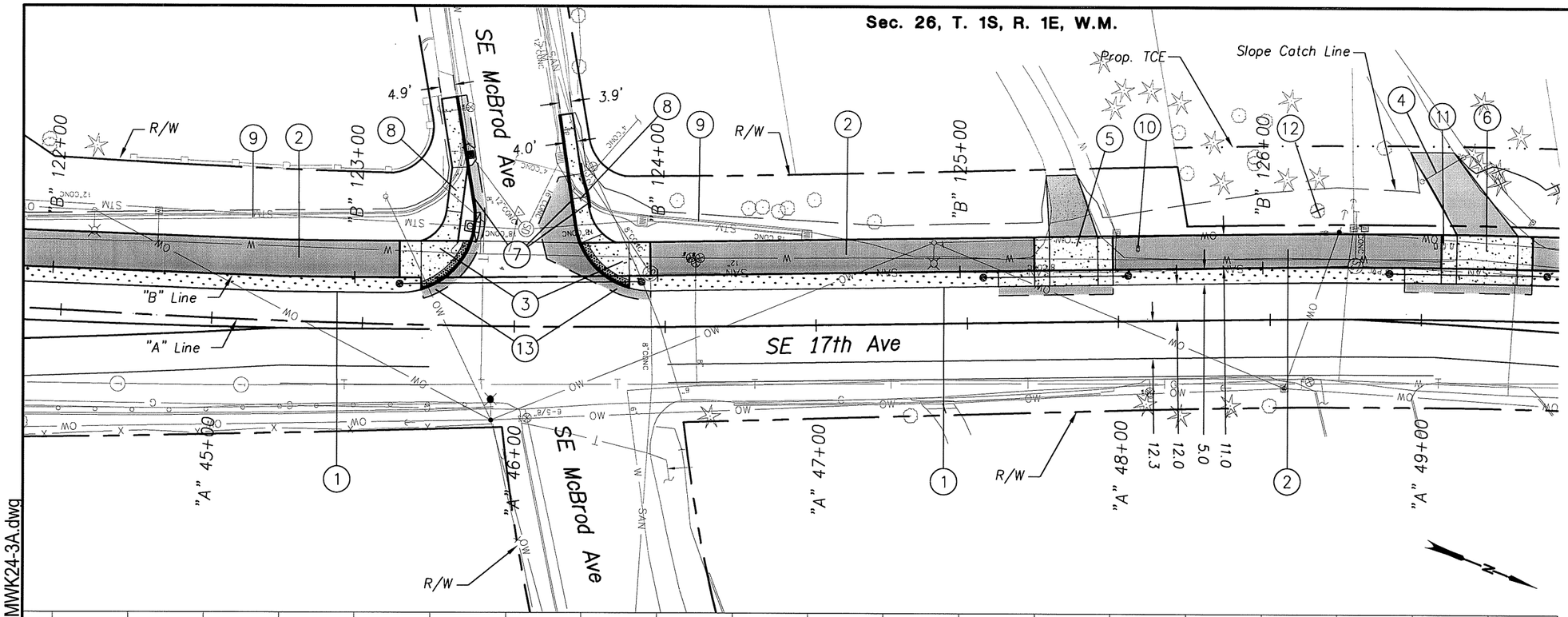

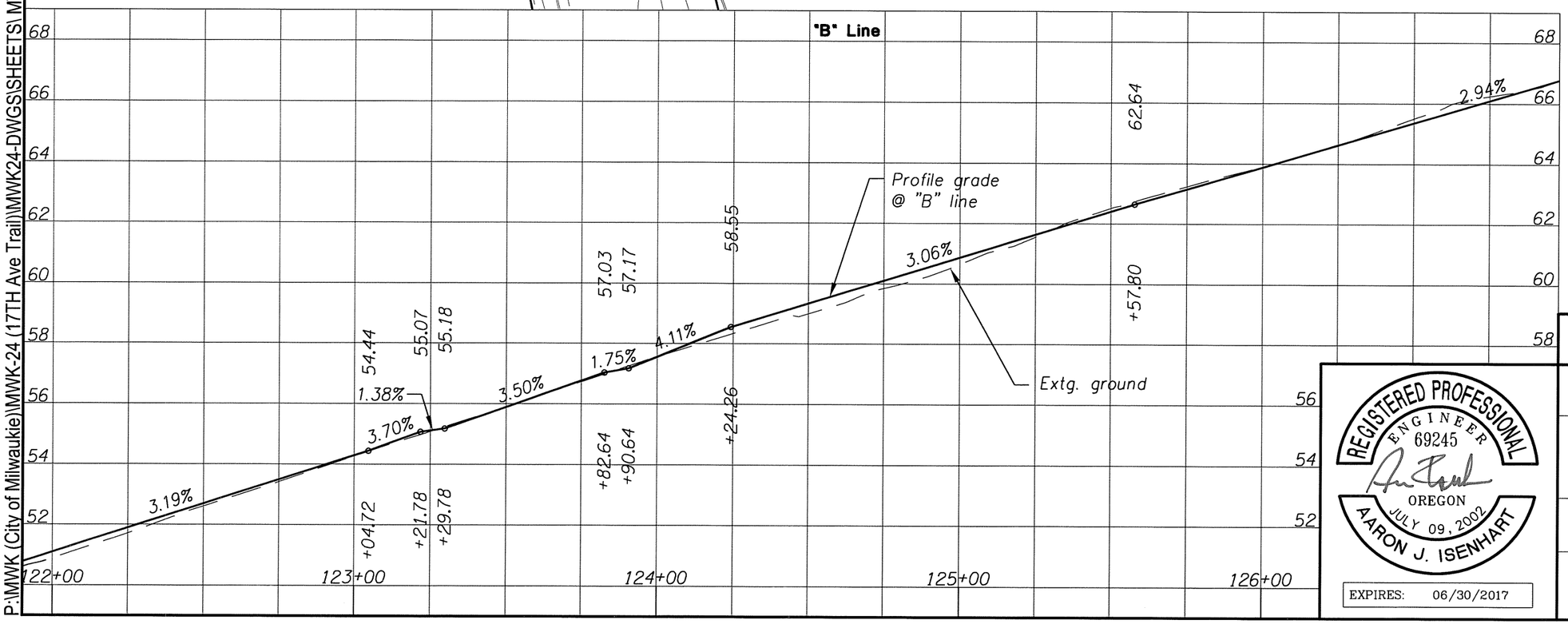

1. Sawcut and remove asph. pavement
2. Const. pervious asph. path
3. Const. P.C. conc. sidewalk ramp
   Const. aggregate shldr.
   (For details, see sht. 2B-7 & 2E-3)
4. Remove existing gate and gate posts
   Const. 16' double gate
   (See drg. no. RD815)
5. Sta. "B" 125+37.63
   Const. P.C. conc. dwy., option J modified
   Const. asph. conc. connection
   (For details, see shts. 2B-6 and 2F)
6. Sta. "B" 126+74.05
   Const. P.C. conc. dwy., option J modified
   Const. asph. conc. connection
   (For details, see sht. 2B-6 and 2F-2)
7. Const. standard curb
8. Const. P.C. conc. sidewalk
9. Remove extg. curb
10. Remove extg. mailbox
    Inst. single mailbox support
    Cons. conc. collar
    (Location as directed)
    (See drg. nos. RD100, RD101)
11. Remove extg. mailbox
    Inst. multiple mailbox support
    Const. conc. collar
    (Location as directed)
12. Remove trees within grading limits
13. Const. asph. conc. pavement
    Sawcut extg. asph. at match lines
    (For details, see sht. 2B-7)

REGISTERED PROFESSIONAL ENGINEER 69245 OREGON JULY 09, 2002 AARON J. ISENHART

EXPIRES: 06/30/2017

OREGON DEPARTMENT OF TRANSPORTATION

Harper Houf Peterson Righellis Inc.
ENGINEERS • PLANNERS • LANDSCAPE ARCHITECTS • SURVEYORS
205 SE Spokane Street, Suite 200 Portland, OR 97202 phone: 503.221.1131 www.hhpr.com fax: 503.221.1171

17TH AVE TRAIL: SE OCHOCO - SE MCLOUGHLIN
CITY OF MILWAUKIE
CLACKAMAS COUNTY

REVIEWED BY AJI
DESIGNED BY KJO
DRAFTED BY KJO

GENERAL CONSTRUCTION

SHEET NO. 8A

P:\MWK (City of Milwaukie)\MWK-24 (17TH Ave Trail)\MWK24-DWGS\SHEETS\ MWK24-3A.dwg

49V-026

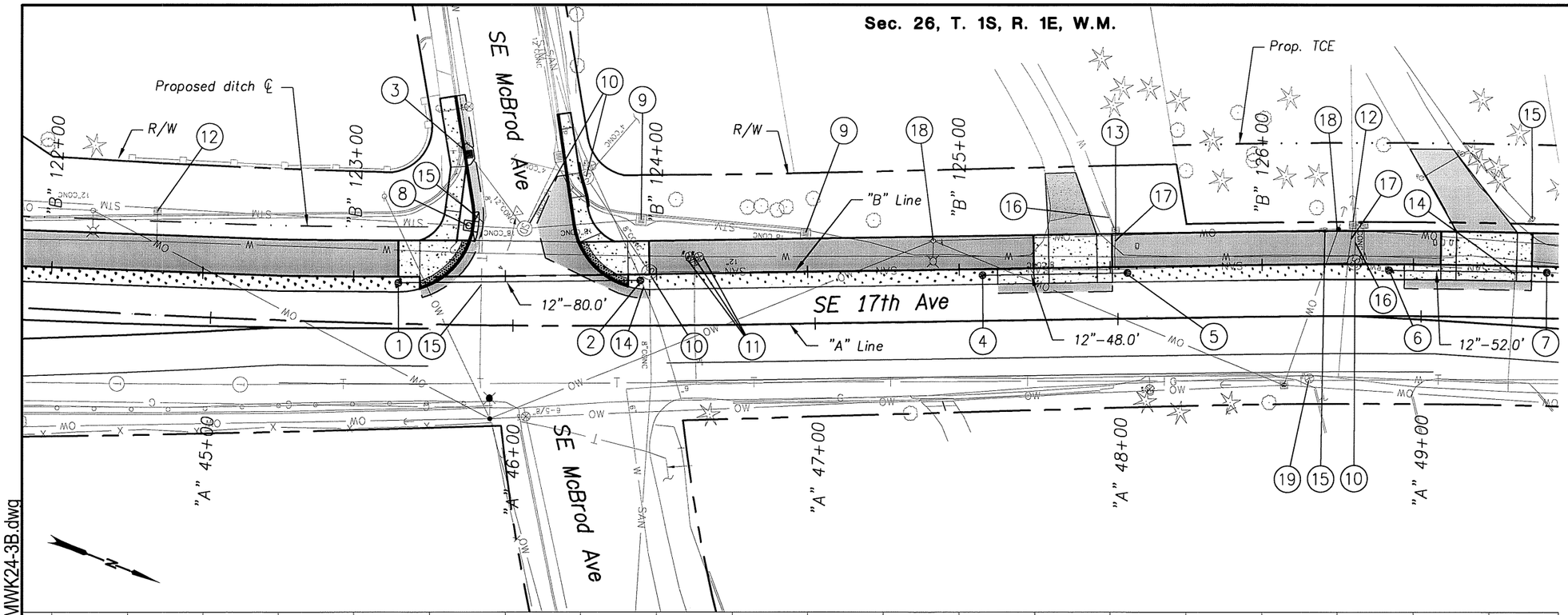

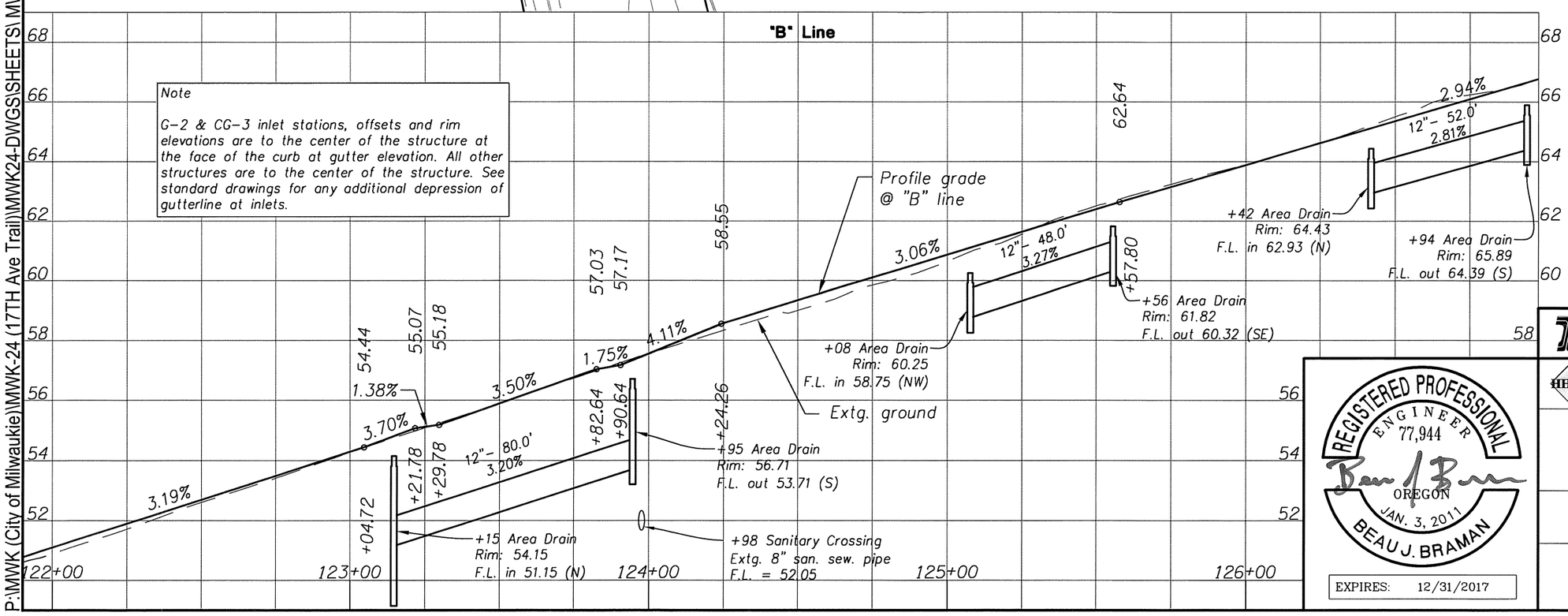

P:\MWK (City of Milwaukie)\MWK-24 (17TH Ave Trail)\MWK24-DWGS\SHEETS\ MWK24-3B.dwg

REGISTERED PROFESSIONAL ENGINEER 77,944 OREGON JAN. 3, 2011 BEAU J. BRAMAN

EXPIRES: 12/31/2017

OREGON DEPARTMENT OF TRANSPORTATION

Harper Houf Peterson Righellis Inc.
ENGINEERS • PLANNERS • LANDSCAPE ARCHITECTS • SURVEYORS
205 SE Spokane Street, Suite 200 Portland, OR 97202 phone: 503.221.1131 www.hhpr.com fax: 503.221.1171

17TH AVE TRAIL: SE OCHOCO - SE MCLOUGHLIN
CITY OF MILWAUKIE
CLACKAMAS COUNTY

REVIEWED BY AJI
DESIGNED BY BJB
DRAFTED BY KJO

DRAINAGE & UTILITIES

SHEET NO. 8B

(1) Sta. "B" 123+14.71, 2.0' Rt.
Const. conc. inlet, type area drain
Rim elev. = 54.15
Sump depth = 18"
Inst. 12" storm sew. pipe – 80.0'
5' depth
S = 0.0320 ft./ft.
I.E. (12" in) – 51.15 (N)
Trench Resurf. – 35.56 sq. yd.
(For details, see sht. 2B)

(2) Sta. "B" 123+94.64, 2.0' Rt.
Const. conc. inlet, type area drain
Rim elev. = 56.71
Sump depth = 0"
I.E. (12" out) – 53.71 (S)
(For details, see sht. 2B)

(3) Sta. "B" 123+37.25, 40.1' Lt.
Remove extg. inlet
Const. type "G-2" (modified) catchbasin
Rim elev. = 59.04
Sump depth = 24"
I.E. (12" out) – 54.46 (NE) Field verify
Connect to extg. storm sew. pipe
(For details, see sht. 2B-2, 2B-4 and 2B-5)

(4) Sta. "B" 125+07.63, 2.0' Rt.
Const. conc. inlet, type area drain
Rim elev. = 60.25
Sump depth = 0"
Inst. 12" storm sew. pipe – 48.0'
5' depth
S = 0.0327 ft./ft.
I.E. (12" in) – 58.75 (NW)
(For details, see sht. 2B)

(5) Sta. "B" 125+55.63, 2.0' Rt.
Const. conc. inlet, type area drain
Rim elev. = 61.82
Sump depth = 0"
I.E. (12" out) – 60.32 (SE)
(For details, see sht. 2B)

(6) Sta. "B" 126+41.99, 2.0' Rt.
Const. conc. inlet, type area drain
Rim elev. = 64.43
Sump depth = 0"
Inst. 12" storm sew. pipe – 52.0'
5' depth
S = 0.0281 ft./ft.
I.E. (12" in) – 62.93 (N)
(For details, see sht. 2B)

(7) Sta. "B" 126+94.08, 2.0' Rt.
Const. conc. inlet, type area drain
Rim elev. = 65.89
Sump depth = 0"
I.E. (12" out) – 64.39 (S)
For details, see sht. 2B)

(8) Sta. "B" 123+39.67, 16.5' Lt.
Const. type "CG-3" (modified) catchbasin
Rim elev. = 55.23
Lid elev. = 55.73
Sump depth = 24"
I.E. (18" in) – 49.86 (N) Field verify
I.E. (18" out) – 49.86 (S) Field verify
Connect to extg. storm sew. pipe
(For details, see sht. 2B-4)

(9) Remove extg. inlet – 2
Cap and abandon extg. storm sew. pipe

(10) Minor adjust manhole – 4

(11) Adjust water valve – 3

(12) Adjust water meter – 2

(13) Relocate water meter
(For details, see sht. 2B-5)

(14) Relocate gas main or service (by others) – 2

(15) Relocate telephone (by others) – 4

(16) Reconnect sanitary sewer service line – 2
Contractor to pothole and verify location and depth
(For details, see sht. 2B-9)

(17) Reconnect extg. water service, 1" – 2
Contractor to pothole and verify location
(For details, see sht. 2B-5)

(18) Relocate utility pole (by others) – 2

(19) Adjust gas valve (by others)

REGISTERED PROFESSIONAL ENGINEER 77,944 OREGON JAN. 3, 2011 BEAU J. BRAMAN
EXPIRES: 12/31/2017

OREGON DEPARTMENT OF TRANSPORTATION

Harper Houf Peterson Righellis Inc.
ENGINEERS • PLANNERS • LANDSCAPE ARCHITECTS • SURVEYORS
205 SE Spokane Street, Suite 200 Portland, OR 97202 phone: 503.221.1131 www.hhpr.com fax: 503.221.1171

17TH AVE TRAIL: SE OCHOCO - SE MCLOUGHLIN
CITY OF MILWAUKIE
CLACKAMAS COUNTY

REVIEWED BY AJI
DESIGNED BY BJB
DRAFTED BY KJO

DRAINAGE & UTILITIES

SHEET NO. 8B-2

P:\MWK (City of Milwaukie)\MWK-24 (17TH Ave Trail)\MWK24-DWGS\SHEETS\ MWK24-3B.dwg

Sec. 26, T. 1S, R. 1E, W.M.

49V-026

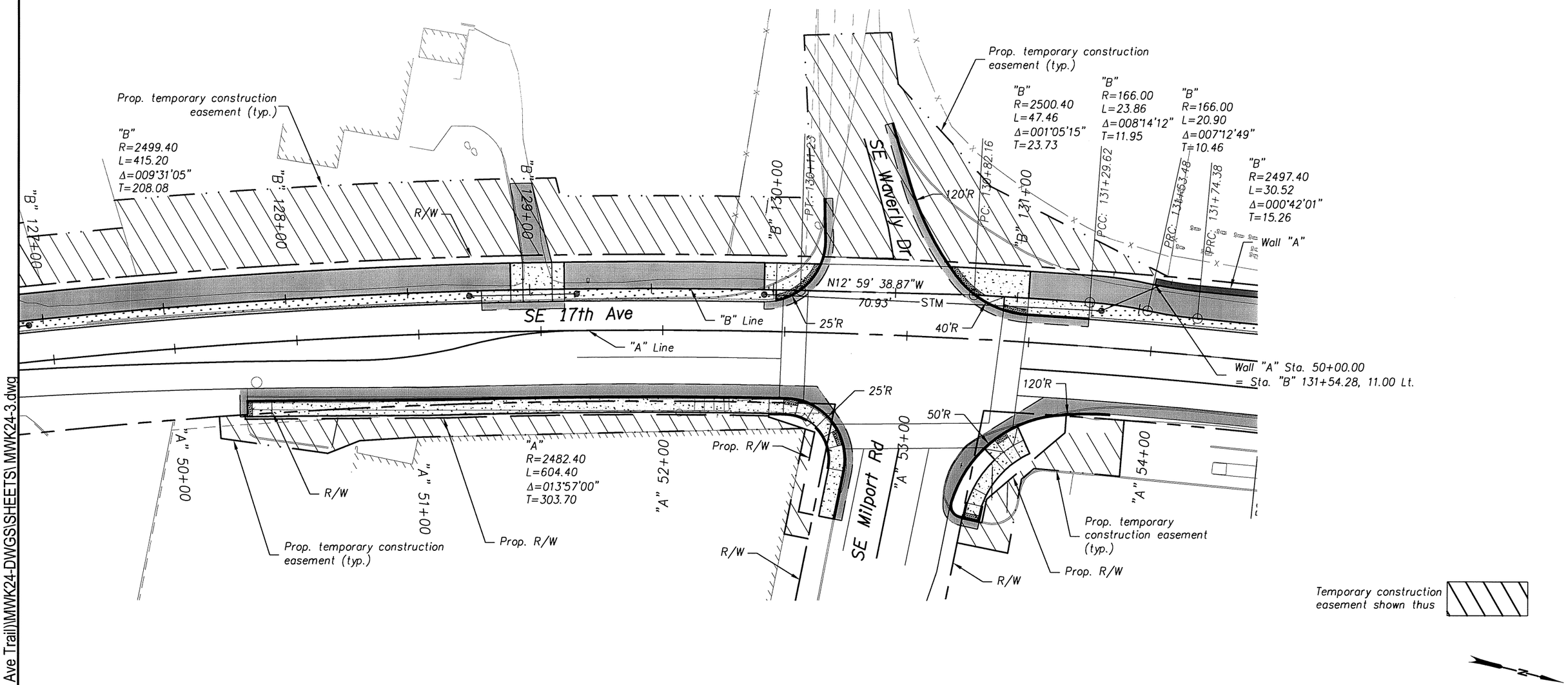

P:\MWK (City of Milwaukie)\MWK-24 (17TH Ave Trail)\MWK24-DWGS\SHEETS\MWK24-3.dwg

REGISTERED PROFESSIONAL ENGINEER 69245 OREGON JULY 09, 2002 AARON J. ISENHART

EXPIRES: 06/30/2017

OREGON DEPARTMENT OF TRANSPORTATION

Harper Houf Peterson Righellis Inc.
ENGINEERS • PLANNERS • LANDSCAPE ARCHITECTS • SURVEYORS
205 SE Spokane Street, Suite 200 Portland, OR 97202 phone: 503.221.1131 www.hhpr.com fax: 503.221.1171

17TH AVE TRAIL: SE OCHOCO - SE MCLOUGHLIN
CITY OF MILWAUKIE
CLACKAMAS COUNTY

REVIEWED BY AJI
DESIGNED BY KJO
DRAFTED BY KJO

ALIGNMENT AND RIGHT OF WAY PLAN

SHEET NO. 9

49V-026

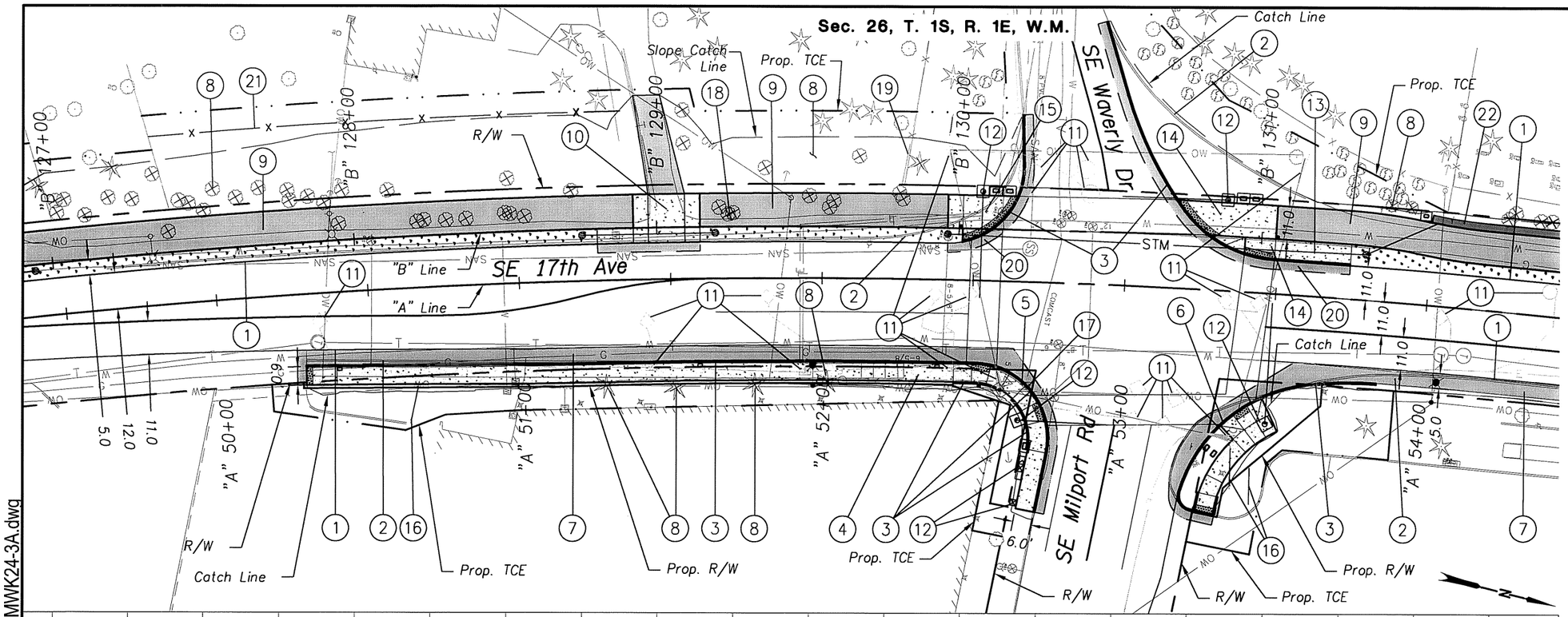

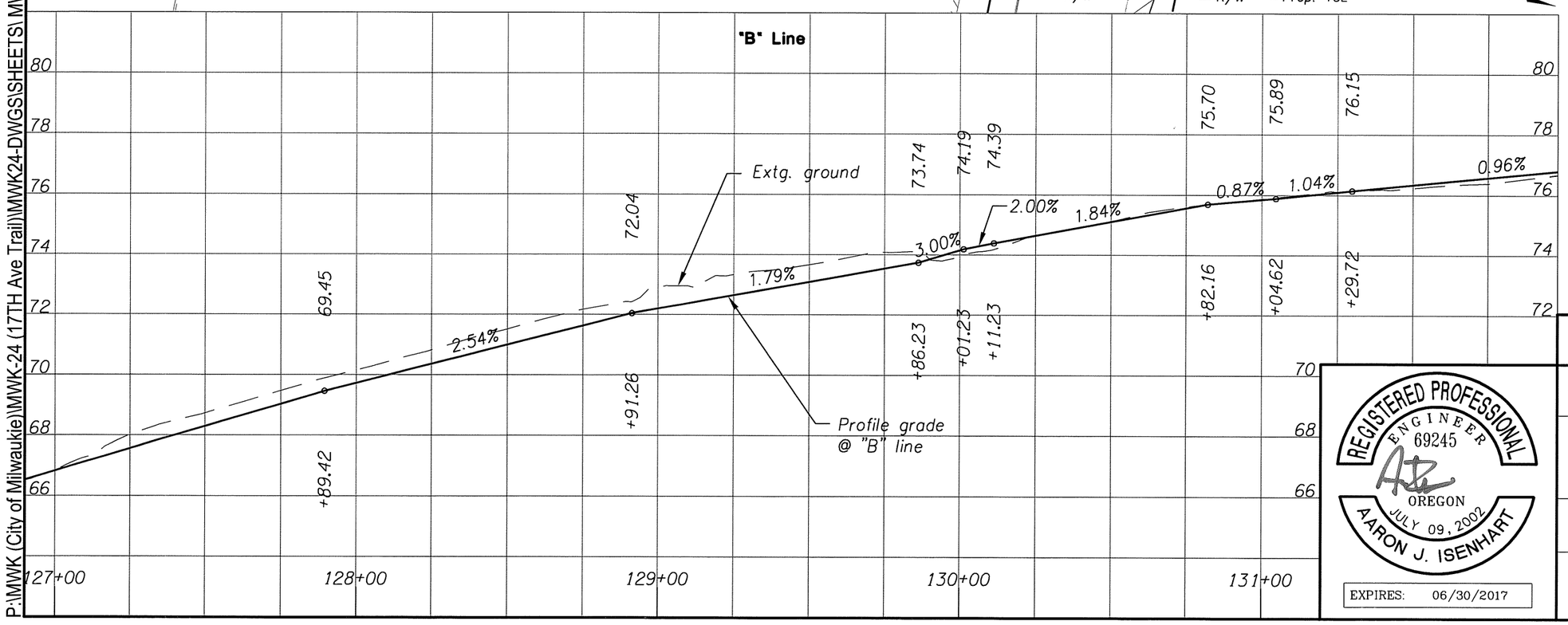

P:\MWK (City of Milwaukie)\MWK-24 (17TH Ave Trail)\MWK24-DWGS\SHEETS\ MWK24-3A.dwg

REGISTERED PROFESSIONAL ENGINEER 69245 OREGON JULY 09, 2002 AARON J. ISENHART

EXPIRES: 06/30/2017

OREGON DEPARTMENT OF TRANSPORTATION

Harper Houf Peterson Righellis Inc.
ENGINEERS • PLANNERS • LANDSCAPE ARCHITECTS • SURVEYORS
205 SE Spokane Street, Suite 200 Portland, OR 97202 phone: 503.221.1131 www.hhpr.com fax: 503.221.1171

17TH AVE TRAIL: SE OCHOCO - SE MCLOUGHLIN
CITY OF MILWAUKIE
CLACKAMAS COUNTY

REVIEWED BY AJI
DESIGNED BY KJO
DRAFTED BY KJO

GENERAL CONSTRUCTION

SHEET NO. 9A

1. Sawcut and remove asph. pavement
2. Remove extg. curb and sidewalk
3. Const. standard curb
4. Const. P.C. conc. sidewalk
   (For details, see sht. 2F-6)
5. Const. P.C. conc. sidewalk ramp
   Const. sidewalk ramp, option H
   (For details, see sht. 2E-6)
6. Const. P.C. conc. sidewalk
   Const. sidewalk ramp, option G
   (For details, see sht. 2E-5)
7. Const. asph. conc. pavement
8. Remove trees within grading limits
9. Const. pervious asph. path
10. Sta. "B" 129+03.28
    Const. P.C. conc. dwy., option J modified
    Const. asph. conc. connection
    (For details, see shts. 2B-6 and 2F-2)
11. Extg. signal equipment
    (See signal plans)
12. Prop. signal equipment
    (See signal plans)
13. Const. P.C. conc. sidewalk for bus stop
    Const. aggregate shldr.
    (For details, see sht. 2B-7 & 2E-4)
14. Const. P.C. conc. sidewalk ramp
    (For details, see sht. 2E-4)
15. Const. P.C. conc. sidewalk ramp
    Const. aggregate shldr.
    (For details, see sht. 2B-7 & 2E-5)
16. Remove private sign and lighting
    Const. private sign
    (For details, see sht. 2B-10)
17. Remove extg. conc. shldr barrier
18. Remove extg. mailbox
    Inst. single mailbox support
    Cons. conc. collar
    (Location as directed)
19. Remove extg. fence within grading limits
20. Const. asph. conc. pavement
    Sawcut extg. asph. at match lines
    (For details, see sht. 2B-7)
21. Sta. "B" 127+34.91 to Sta. "B" 128+88.49
    Const. chain link fence with plastic pickets - 156' (Type CL-6R)
    (See drg. no. RD815)
22. Sta. "B" 131+54.28 to Sta. "B" 132+80.82
    Const. retaining Wall "A", rockery
    Protect cemetery fencing
    See sht. GC

REGISTERED PROFESSIONAL ENGINEER
69245
OREGON
JULY 09, 2002
AARON J. ISENHART
EXPIRES: 06/30/2017

OREGON DEPARTMENT OF TRANSPORTATION

HHPR
Harper Houf Peterson Righellis Inc.
ENGINEERS • PLANNERS • LANDSCAPE ARCHITECTS • SURVEYORS
205 SE Spokane Street, Suite 200 Portland, OR 97202 phone: 503.221.1131 www.hhpr.com fax: 503.221.1171

17TH AVE TRAIL: SE OCHOCO - SE MCLOUGHLIN
CITY OF MILWAUKIE
CLACKAMAS COUNTY

REVIEWED BY AJI
DESIGNED BY KJO
DRAFTED BY KJO

GENERAL CONSTRUCTION

SHEET NO. 9A-2

P:\MWK (City of Milwaukie)\MWK-24 (17TH Ave Trail)\MWK24-DWGS\SHEETS\ MWK24-3A.dwg

49V-026

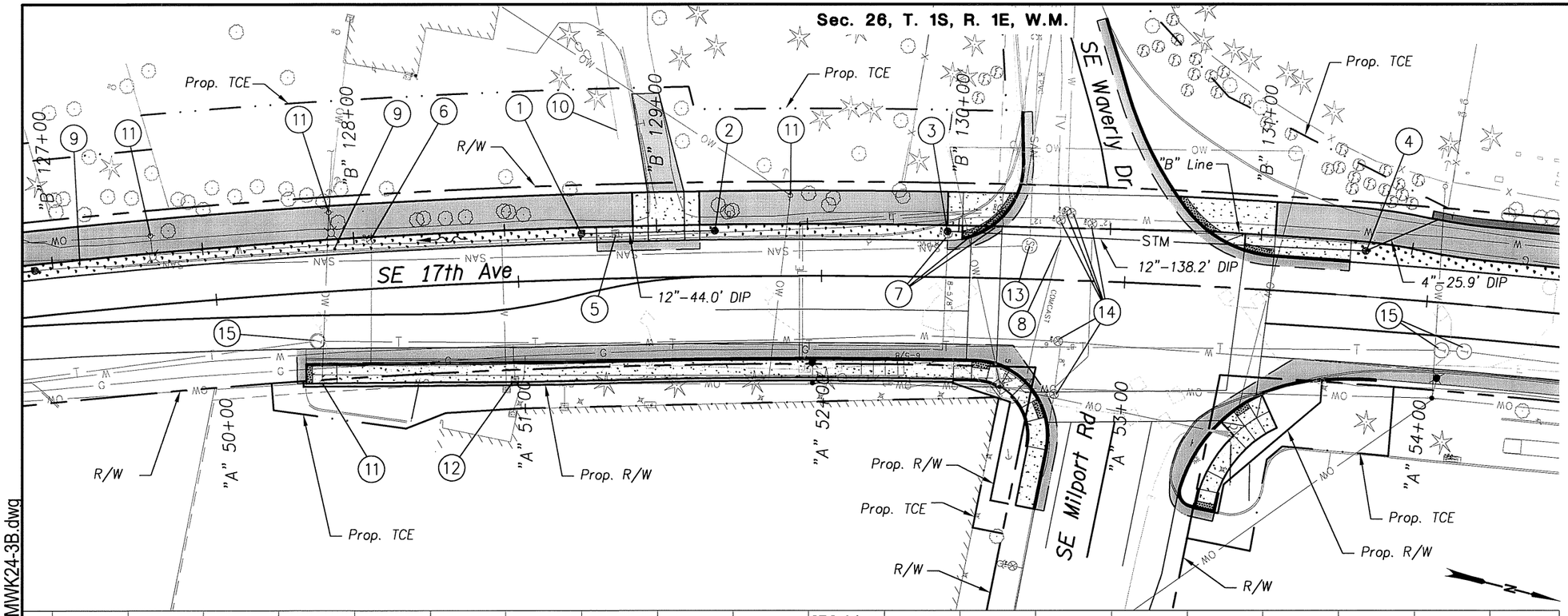

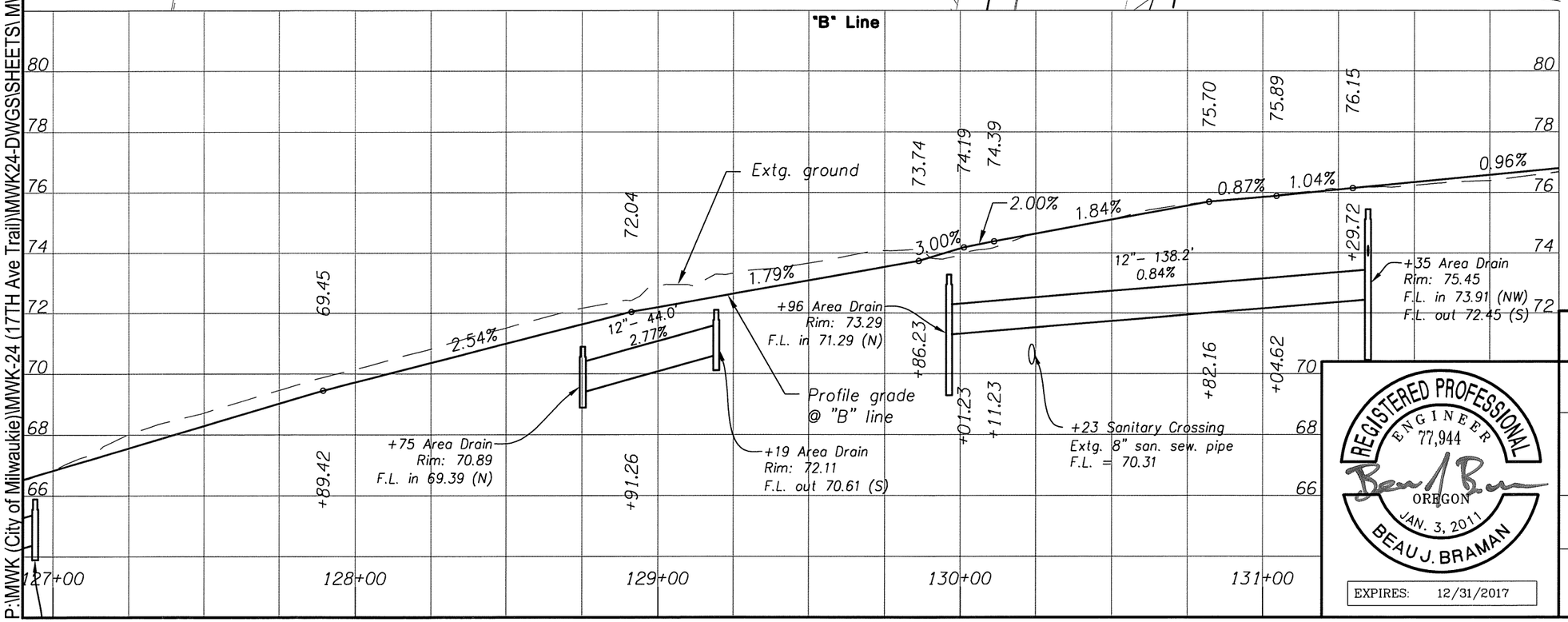

Note

G-2 inlet stations, offsets and rim elevations are to the center of the structure at the face of the curb at gutter elevation. All other structures are to the center of the structure. See standard drawings for any additional depression of gutterline at inlets.

OREGON DEPARTMENT OF TRANSPORTATION

Harper Houf Peterson Righellis Inc.
ENGINEERS • PLANNERS • LANDSCAPE ARCHITECTS • SURVEYORS
205 SE Spokane Street, Suite 200 Portland, OR 97202 phone: 503.221.1131 www.hhpr.com fax: 503.221.1171

REGISTERED PROFESSIONAL ENGINEER 77,944 OREGON JAN. 3, 2011 BEAU J. BRAMAN

EXPIRES: 12/31/2017

17TH AVE TRAIL: SE OCHOCO - SE MCLOUGHLIN
CITY OF MILWAUKIE
CLACKAMAS COUNTY

REVIEWED BY AJI
DESIGNED BY BJB
DRAFTED BY KJO

DRAINAGE & UTILITIES

SHEET NO. 9B

P:\MWK (City of Milwaukie)\MWK-24 (17TH Ave Trail)\MWK24-DWGS\SHEETS\MWK24-3B.dwg

(1) Sta. "B" 128+75.22, 2.0' Rt.
Const. conc. inlet, type area drain
Rim elev. = 70.89
Sump depth = 0"
Inst. 12" ductile iron storm sew. pipe – 44.0'
5' depth
S = 0.0277 ft./ft.
I.E. (12" in) – 69.39 (N)
(For details, see sht. 2B)

(2) Sta. "B" 129+19.29, 2.0' Rt.
Const. conc. inlet, type area drain
Rim elev. = 72.11
Sump depth = 0"
I.E. (12" out) – 70.61 (S)
(For details, see sht. 2B)

(3) Sta. "B" 129+96.29, 2.0' Rt.
Const. conc. inlet, type area drain
Rim elev. = 73.29
Sump depth = 18"
Inst. 12" ductile iron storm sew. pipe – 138.2'
5' depth
S = 0.0084 ft./ft.
I.E. (12" in) – 71.29 (N)
Trench Resurf. – 61.42 sq. yd.
(For details, see sht. 2B)

(4) Sta. "B" 131+34.84, 2.7' Rt.
Const. conc. inlet, type area drain
Rim elev. = 75.45
Sump depth = 18"
Inst. 4" ductile iron storm sew. pipe – 25.9'
5' depth
S = 0.0500 ft./ft.
I.E. (4" in) – 73.91 (NW)
I.E. (12" out) – 72.45 (S)
(For details, see sht. 2B)

(5) Relocate water meter
(For details, see sht. 2B–5)

(6) Adjust gas valve (by others)

(7) Relocate gas main or valve (by others) – 3

(8) Relocate television (by others)

(9) Reconnect sanitary sewer service line – 2
Contractor to pothole and verify location and depth
(For details, see sht. 2B–9)

(10) Reconnect extg. water service, 1"
Contractor to pothole and verify location
(For details, see sht. 2B–5)

(11) Relocate utility pole (by others) – 4

(12) Adjust water meter

(13) Minor adjust manhole

(14) Adjust water valve – 6

(15) Minor adjust manhole (by others) – 3

REGISTERED PROFESSIONAL ENGINEER 77,944 OREGON JAN. 3, 2011 BEAU J. BRAMAN

EXPIRES: 12/31/2017

OREGON DEPARTMENT OF TRANSPORTATION

Harper Houf Peterson Righellis Inc.
ENGINEERS • PLANNERS • LANDSCAPE ARCHITECTS • SURVEYORS
205 SE Spokane Street, Suite 200 Portland, OR 97202 phone: 503.221.1131 www.hhpr.com fax: 503.221.1171

17TH AVE TRAIL: SE OCHOCO - SE MCLOUGHLIN
CITY OF MILWAUKIE
CLACKAMAS COUNTY

REVIEWED BY AJI
DESIGNED BY BJB
DRAFTED BY KJO

DRAINAGE & UTILITIES

SHEET NO. 9B-2

P:\MWK (City of Milwaukie)\MWK-24 (17TH Ave Trail)\MWK24-DWGS\SHEETS\ MWK24-3B.dwg

Sec. 26, T. 1S, R. 1E, W.M.

49V-026

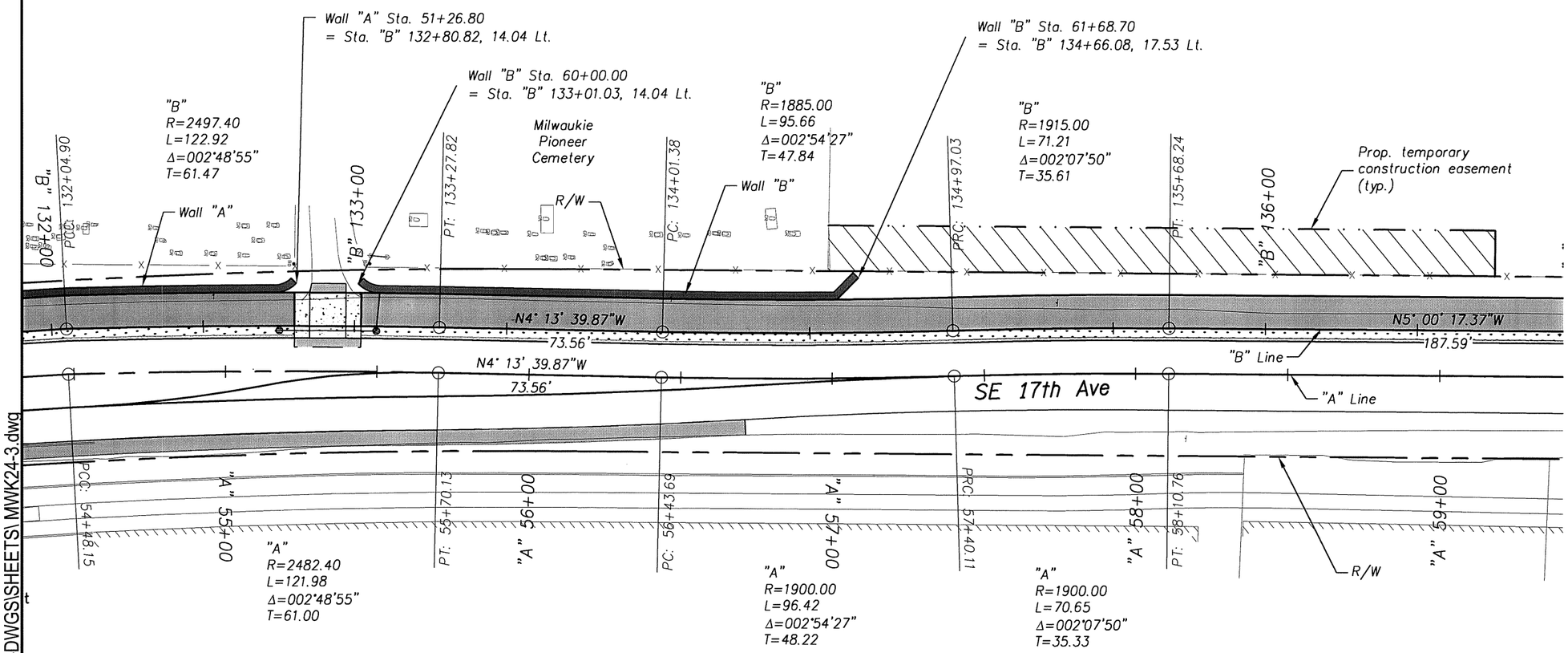

P:\MWK (City of Milwaukie)\MWK-24 (17TH Ave Trail)\MWK24-DWGS\SHEETS\ MWK24-3.dwg

REGISTERED PROFESSIONAL ENGINEER 69245 OREGON JULY 09, 2002 AARON J. ISENHART

EXPIRES: 06/30/2017

OREGON DEPARTMENT OF TRANSPORTATION

Harper Houf Peterson Righellis Inc.
ENGINEERS • PLANNERS • LANDSCAPE ARCHITECTS • SURVEYORS
205 SE Spokane Street, Suite 200 Portland, OR 97202 phone: 503.221.1131 www.hhpr.com fax: 503.221.1171

17TH AVE TRAIL: SE OCHOCO - SE MCLOUGHLIN
CITY OF MILWAUKIE
CLACKAMAS COUNTY

REVIEWED BY AJI
DESIGNED BY KJO
DRAFTED BY KJO

ALIGNMENT AND RIGHT OF WAY PLAN

SHEET NO. 10

Sec. 26, T. 1S, R. 1E, W.M.

49V-026

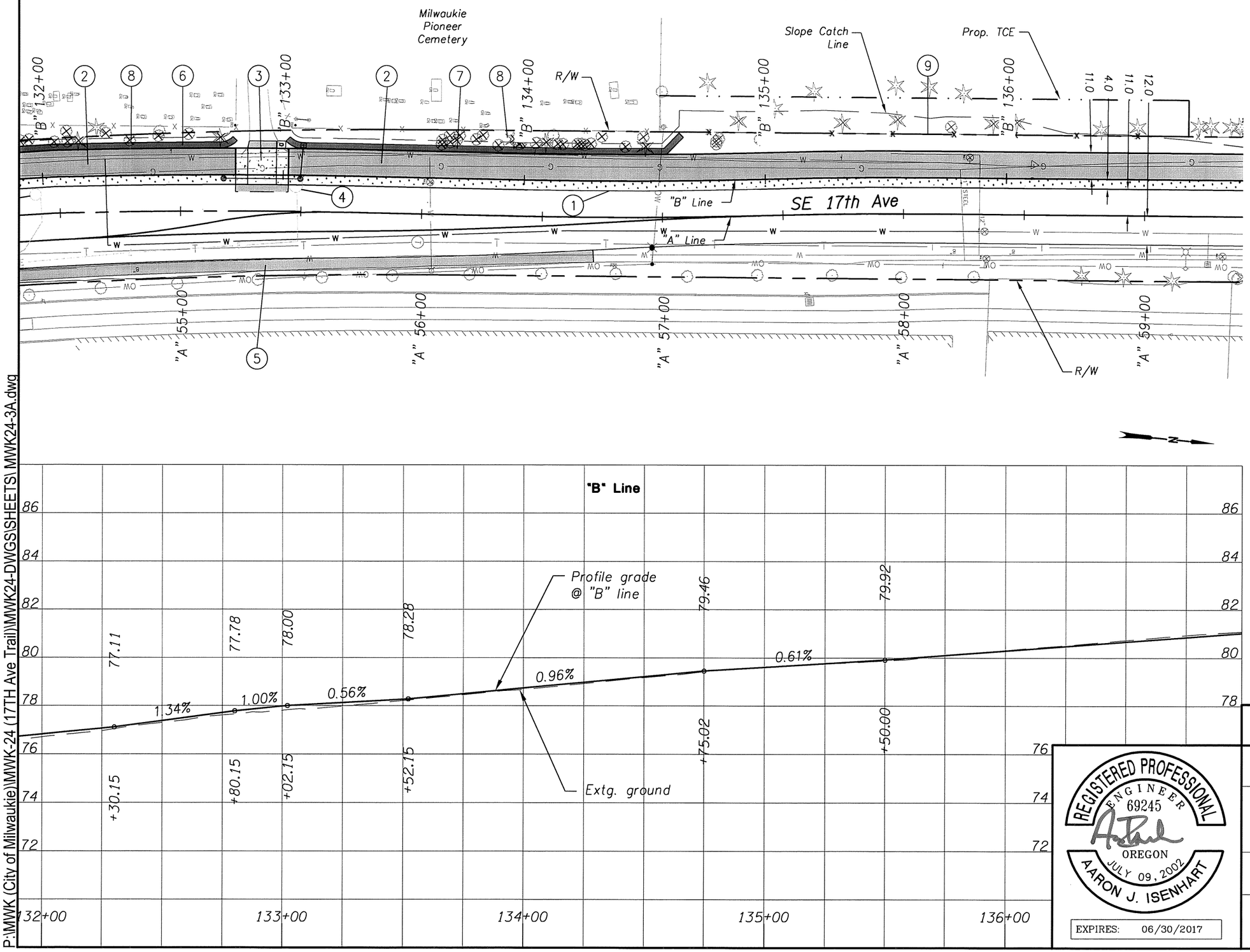

1. Sawcut and remove asph. pavement
2. Const. pervious asph. path
3. Sta. "B" 132+91.15
   Const. P.C. conc. dwy., option J modified
   Const. asph. conc. connection
   (For details, see shts. 2B-6 and 2F-3)
4. Extg. traffic signal equipment
   (See signal plans)
5. See sht. 9A, note 7
   Const. asph. conc. pavement
   Sawcut at match line
6. Sta. "B" 131+54.28 to Sta. "B" 132+80.82
   Const. retaining Wall "A"
   Protect cemetery fencing
   See sht. GC
7. Sta. "B" 133+01.03 to Sta. "B" 134+66.08
   Const. retaining Wall "B", rockery
   Protect cemetery fencing
   See sht. GC-2
8. Remove trees within grading limits
   Protect cemetery fencing
9. Sta. "B" 134+56.72 to Sta. "B" 136+75.33
   Remove fence
   Const. chain link fence with plastic pickets - 220' (Type CL-6R)

REGISTERED PROFESSIONAL ENGINEER 69245 OREGON JULY 09, 2002 AARON J. ISENHART

EXPIRES: 06/30/2017

OREGON DEPARTMENT OF TRANSPORTATION

Harper Houf Peterson Righellis Inc.
ENGINEERS • PLANNERS • LANDSCAPE ARCHITECTS • SURVEYORS
205 SE Spokane Street, Suite 200 Portland, OR 97202 phone: 503.221.1131 www.hhpr.com fax: 503.221.1171

17TH AVE TRAIL: SE OCHOCO - SE MCLOUGHLIN
CITY OF MILWAUKIE
CLACKAMAS COUNTY

REVIEWED BY AJI
DESIGNED BY KJO
DRAFTED BY KJO

GENERAL CONSTRUCTION

SHEET NO. 10A

P:\MWK (City of Milwaukie)\MWK-24 (17TH Ave Trail)\MWK24-DWGS\SHEETS\MWK24-3A.dwg

Sec. 26, T. 1S, R. 1E, W.M.

49V-026

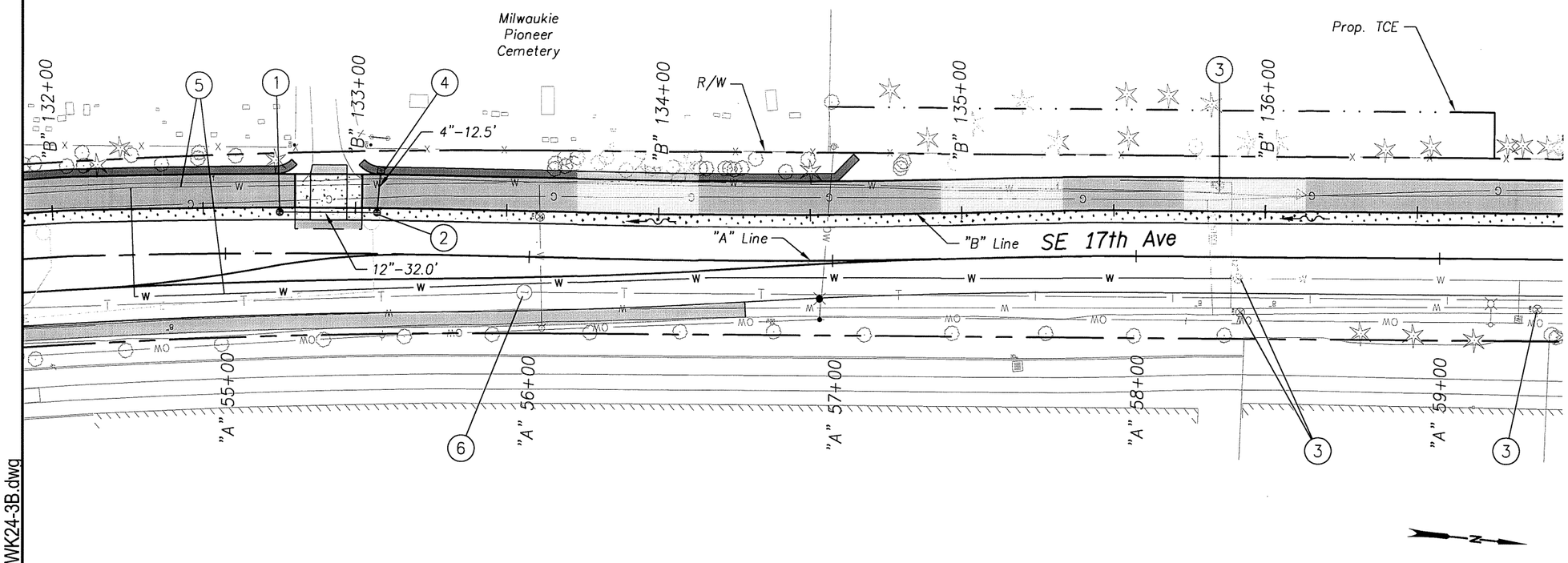

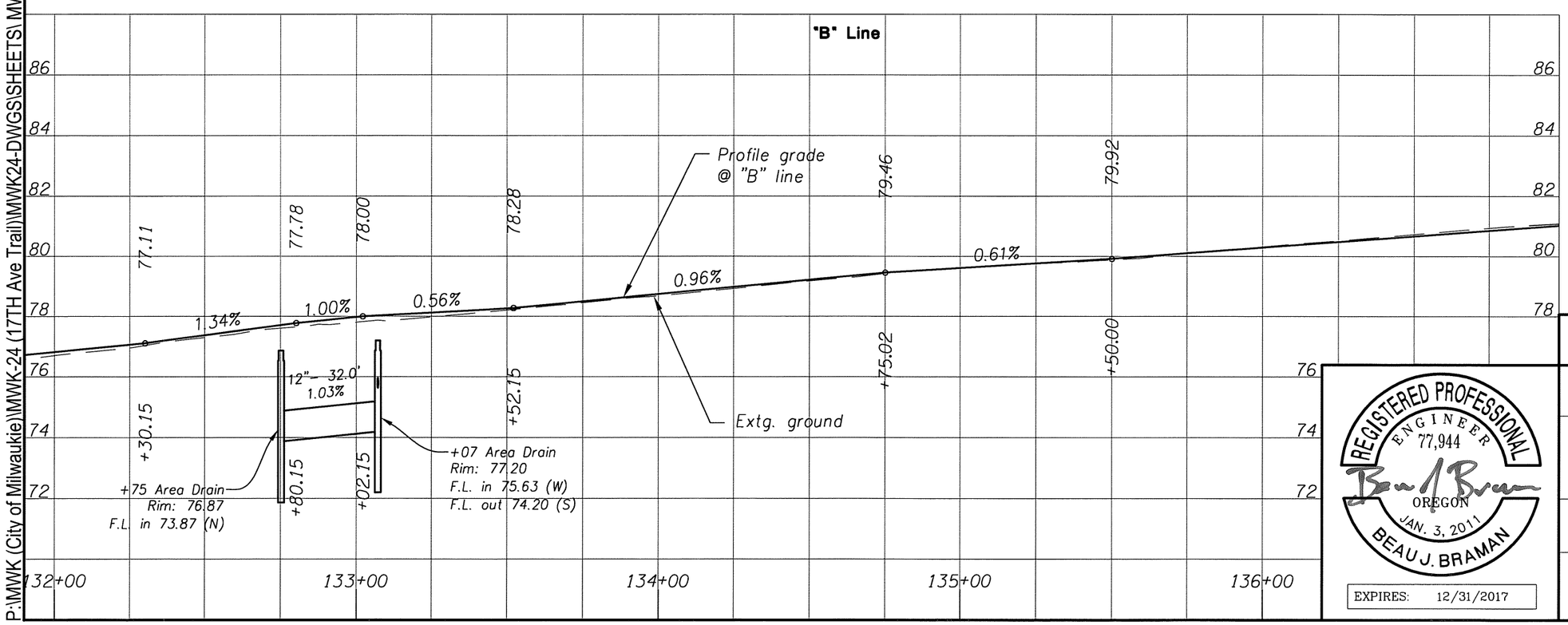

1. Sta. "B" 132+75.13, 1.5' Rt.
   Const. conc. inlet, type area drain
   Rim elev. = 76.87
   Sump depth = 18"
   Inst. 12" storm sew. pipe – 32.0'
   5' depth
   S = 0.0103 ft./ft.
   I.E. (12" in) – 73.87 (N)
   (For details, see sht. 2B)

2. Sta. "B" 133+07.18, 1.5' Rt.
   Const. conc. inlet, type area drain
   Rim elev. = 77.20
   Sump depth = 18"
   Inst. 4" ductile iron storm sew. pipe – 12.5'
   5' depth
   S = 0.0800 ft./ft.
   I.E. (4" in) – 75.63 (W)
   I.E. (12" out) – 74.20 (S)
   (For details, see sht. 2B)

3. Adjust water valve – 4

4. Relocate water meter
   (For details, see sht. 2B–5)

5. Sta. "B" 132+26.11 to Sta. "B" 135+88.93
   Relocate water main (by others)

6. Minor adjust manhole (by others)

Note

G–2 inlet stations, offsets and rim elevations are to the center of the structure at the face of the curb at gutter elevation. All other structures are to the center of the structure. See standard drawings for any additional depression of gutterline at inlets.

REGISTERED PROFESSIONAL ENGINEER 77,944 OREGON JAN. 3, 2011 BEAU J. BRAMAN

EXPIRES: 12/31/2017

OREGON DEPARTMENT OF TRANSPORTATION

Harper Houf Peterson Righellis Inc.
ENGINEERS • PLANNERS • LANDSCAPE ARCHITECTS • SURVEYORS
205 SE Spokane Street, Suite 200 Portland, OR 97202 phone: 503.221.1131 www.hhpr.com fax: 503.221.1171

17TH AVE TRAIL: SE OCHOCO - SE MCLOUGHLIN
CITY OF MILWAUKIE
CLACKAMAS COUNTY

REVIEWED BY AJI
DESIGNED BY BJB
DRAFTED BY KJO

DRAINAGE & UTILITIES

SHEET NO. 10B

P:\MWK (City of Milwaukie)\MWK-24 (17TH Ave Trail)\MWK24-DWGS\SHEETS\ MWK24-3B.dwg

Sec. 26, T. 1S, R. 1E, W.M.

49V-026

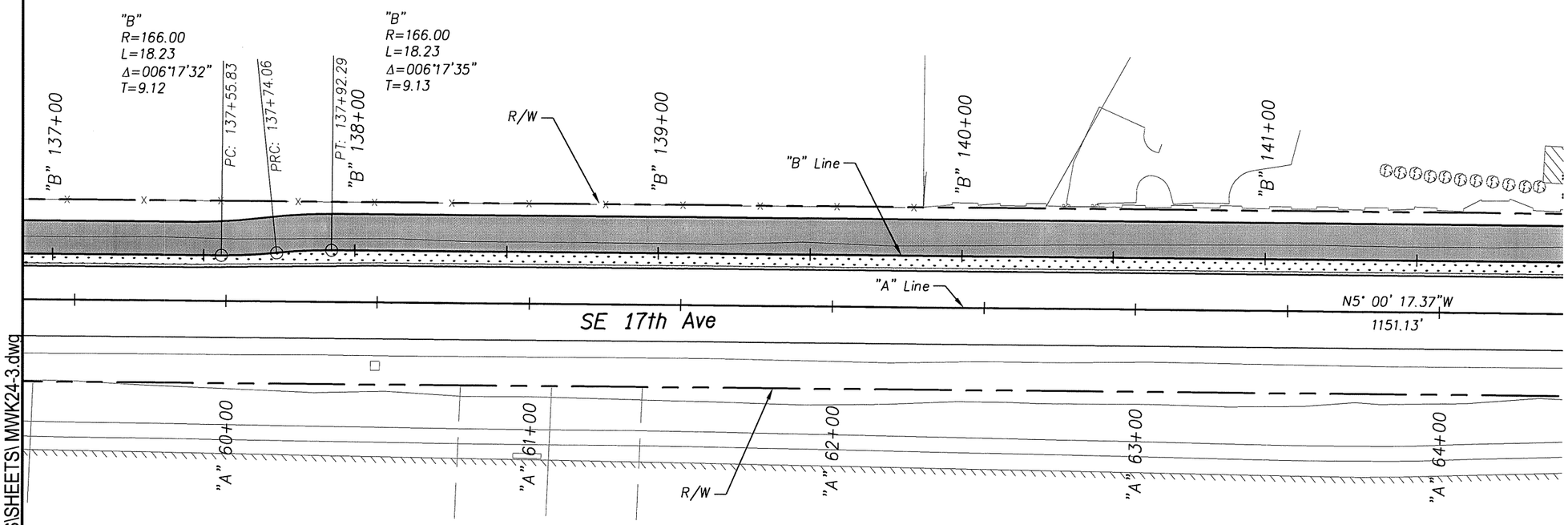

N

REGISTERED PROFESSIONAL ENGINEER
69245
OREGON
JULY 09, 2002
AARON J. ISENHART

EXPIRES: 06/30/2017

OREGON DEPARTMENT OF TRANSPORTATION

Harper Houf Peterson Righellis Inc.
ENGINEERS • PLANNERS • LANDSCAPE ARCHITECTS • SURVEYORS
205 SE Spokane Street, Suite 200 Portland, OR 97202 phone: 503.221.1131 www.hhpr.com fax: 503.221.1171

17TH AVE TRAIL: SE OCHOCO - SE MCLOUGHLIN
CITY OF MILWAUKIE
CLACKAMAS COUNTY

REVIEWED BY AJI
DESIGNED BY KJO
DRAFTED BY KJO

ALIGNMENT AND RIGHT OF WAY PLAN

SHEET NO. 11

P:\MWK (City of Milwaukie)\MWK-24 (17TH Ave Trail)\MWK24-DWGS\SHEETS\ MWK24-3.dwg

Sec. 26, T. 1S, R. 1E, W.M.

49V-026

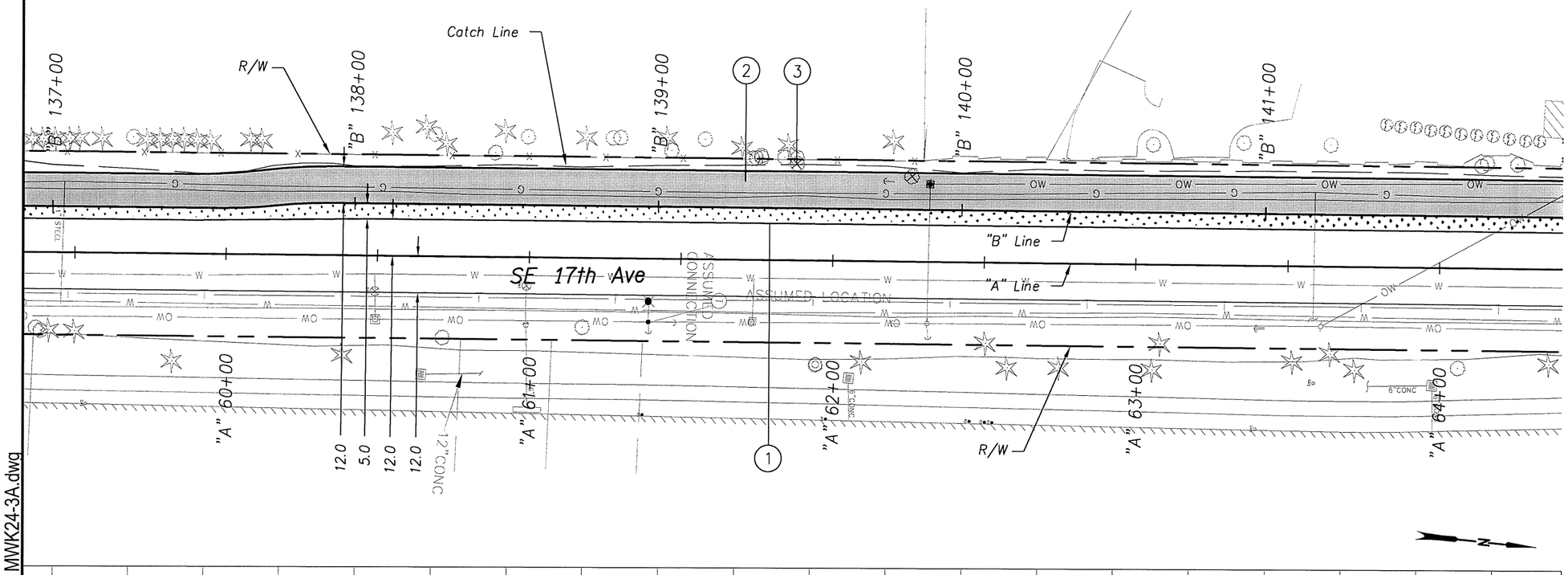

1. Sawcut and remove asph. pavement
2. Const. pervious asph. path
3. Remove trees within grading limits

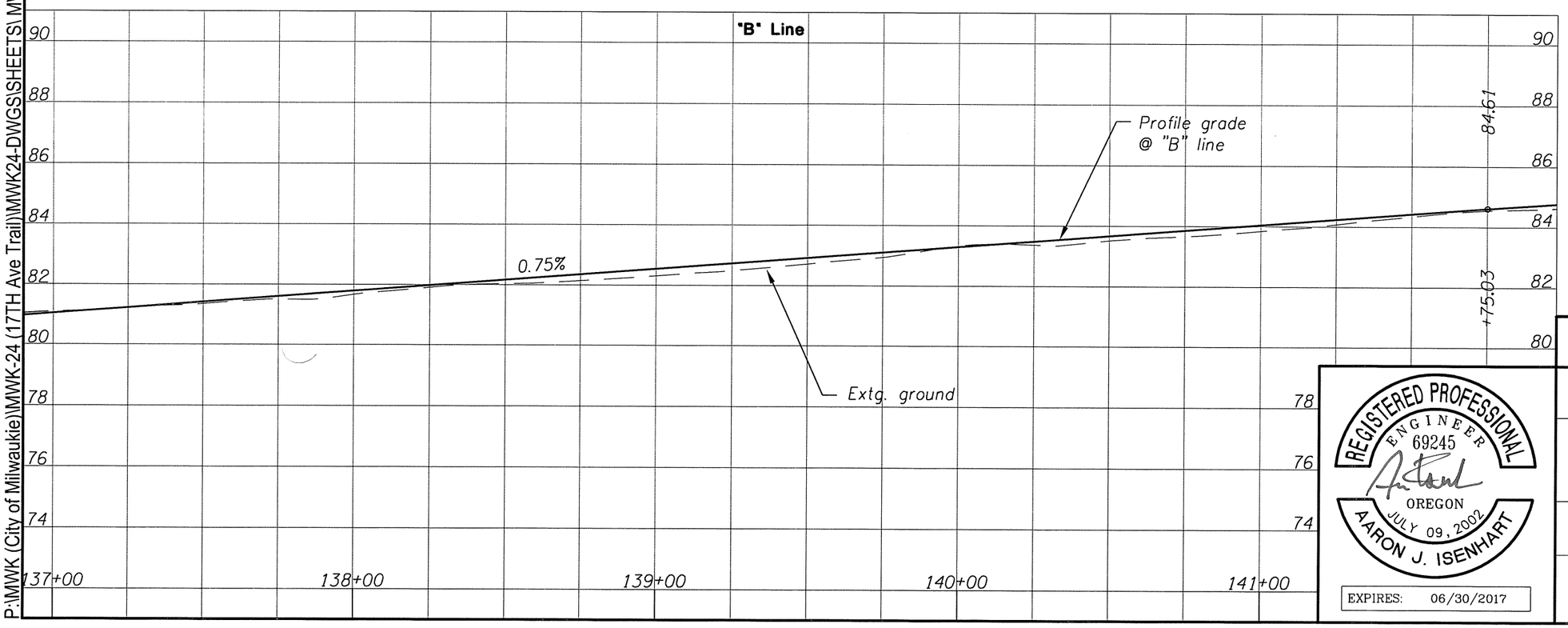

P:\MWK (City of Milwaukie)\MWK-24 (17TH Ave Trail)\MWK24-DWGS\SHEETS\ MWK24-3A.dwg

REGISTERED PROFESSIONAL ENGINEER 69245 OREGON JULY 09, 2002 AARON J. ISENHART

EXPIRES: 06/30/2017

OREGON DEPARTMENT OF TRANSPORTATION

Harper Houf Peterson Righellis Inc.
ENGINEERS • PLANNERS • LANDSCAPE ARCHITECTS • SURVEYORS
205 SE Spokane Street, Suite 200 Portland, OR 97202 phone: 503.221.1131 www.hhpr.com fax: 503.221.1171

17TH AVE TRAIL: SE OCHOCO - SE MCLOUGHLIN
CITY OF MILWAUKIE
CLACKAMAS COUNTY

REVIEWED BY AJI
DESIGNED BY KJO
DRAFTED BY KJO

GENERAL CONSTRUCTION

SHEET NO. 11A

Sec. 26, T. 1S, R. 1E, W.M.

49V-026

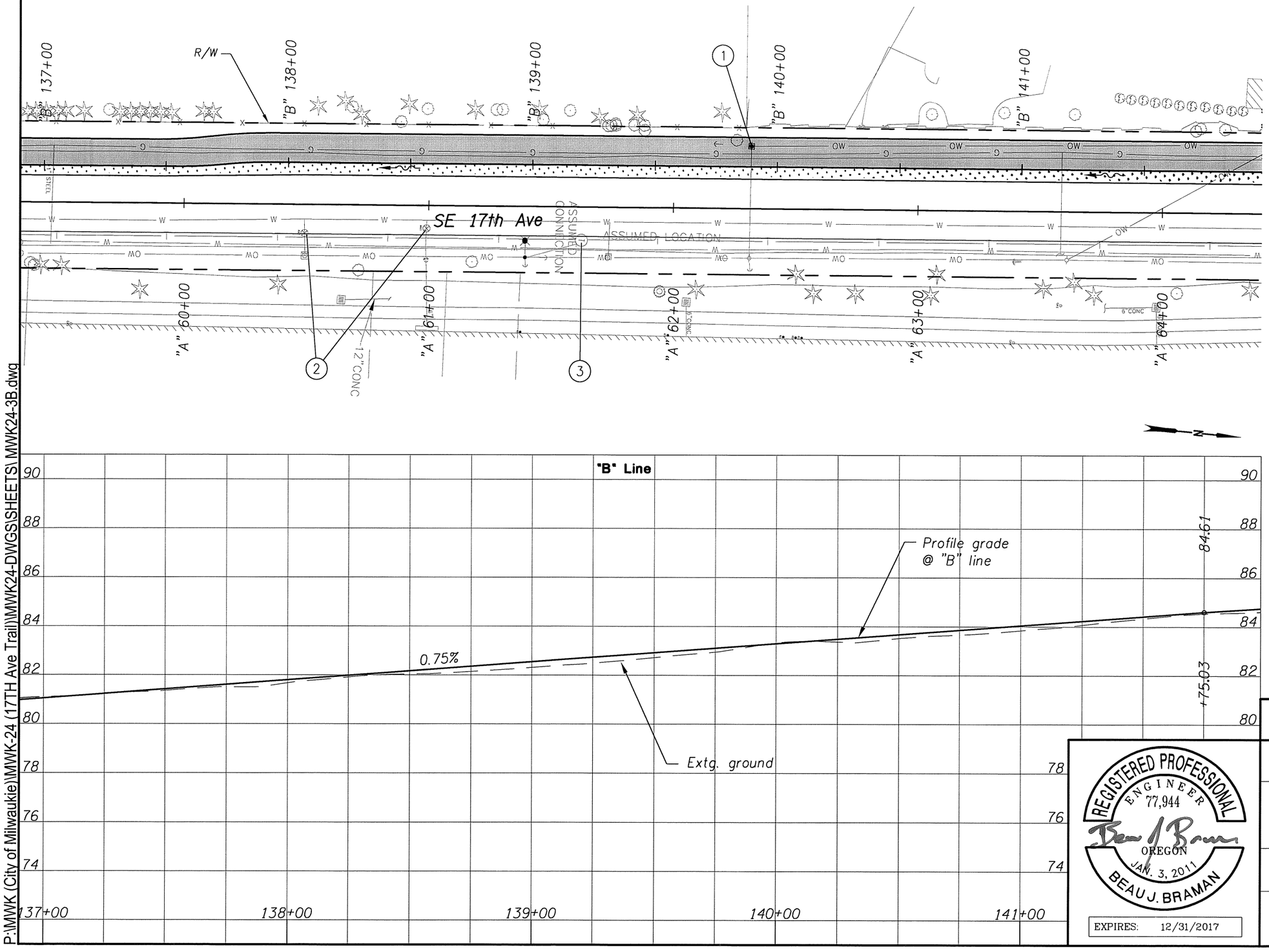

1. Relocate utility pole (by others)
2. Adjust water valve – 2
3. Minor adjust manhole (by others)

P:\MWK (City of Milwaukie)\MWK-24 (17TH Ave Trail)\MWK24-DWGS\SHEETS\ MWK24-3B.dwg

OREGON DEPARTMENT OF TRANSPORTATION

Harper Houf Peterson Righellis Inc.
ENGINEERS • PLANNERS • LANDSCAPE ARCHITECTS • SURVEYORS
205 SE Spokane Street, Suite 200 Portland, OR 97202 phone: 503.221.1131 www.hhpr.com fax: 503.221.1171

REGISTERED PROFESSIONAL ENGINEER 77,944 OREGON JAN. 3, 2011 BEAU J. BRAMAN

EXPIRES: 12/31/2017

17TH AVE TRAIL: SE OCHOCO - SE MCLOUGHLIN
CITY OF MILWAUKIE
CLACKAMAS COUNTY

REVIEWED BY AJI
DESIGNED BY BJB
DRAFTED BY KJO

DRAINAGE & UTILITIES

SHEET NO. 11B

Sec. 26, T. 1S, R. 1E, W.M.

49V-026

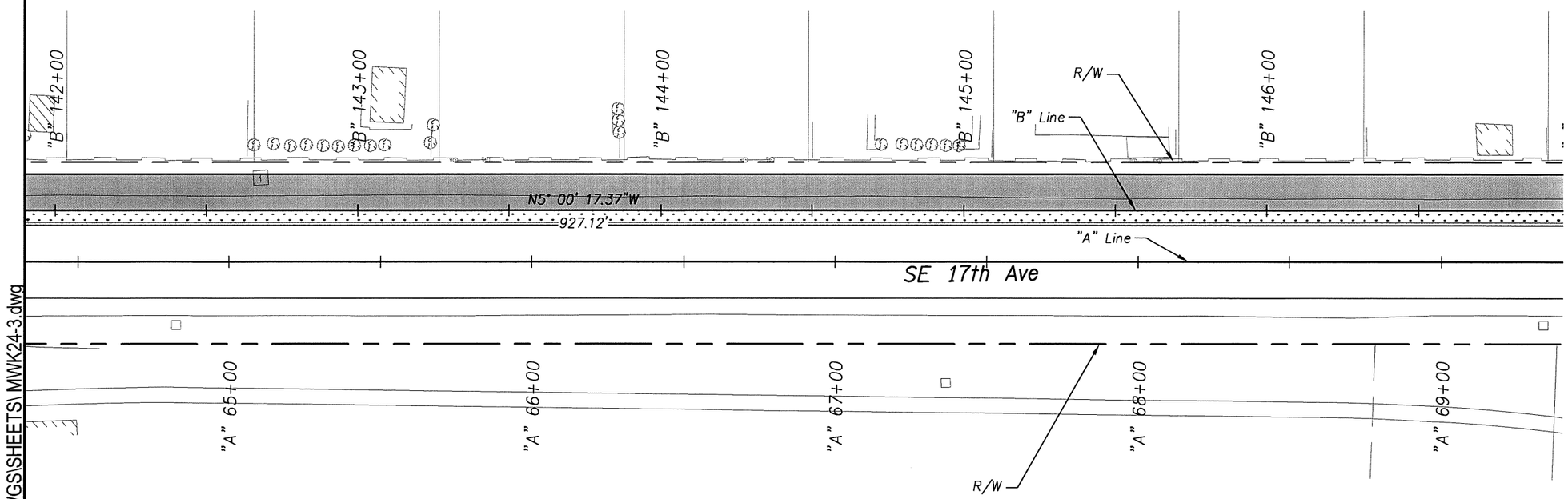

P:\MWK (City of Milwaukie)\MWK-24 (17TH Ave Trail)\MWK24-DWGS\SHEETS\ MWK24-3.dwg

REGISTERED PROFESSIONAL ENGINEER 69245 OREGON JULY 09, 2002 AARON J. ISENHART

EXPIRES: 06/30/2017

OREGON DEPARTMENT OF TRANSPORTATION

Harper Houf Peterson Righellis Inc.
ENGINEERS • PLANNERS • LANDSCAPE ARCHITECTS • SURVEYORS
205 SE Spokane Street, Suite 200 Portland, OR 97202 phone: 503.221.1131 www.hhpr.com fax: 503.221.1171

17TH AVE TRAIL: SE OCHOCO - SE MCLOUGHLIN
CITY OF MILWAUKIE
CLACKAMAS COUNTY

REVIEWED BY AJI
DESIGNED BY KJO
DRAFTED BY KJO

ALIGNMENT AND RIGHT OF WAY PLAN

SHEET NO. 12

Sec. 26, T. 1S, R. 1E, W.M.

49V-026

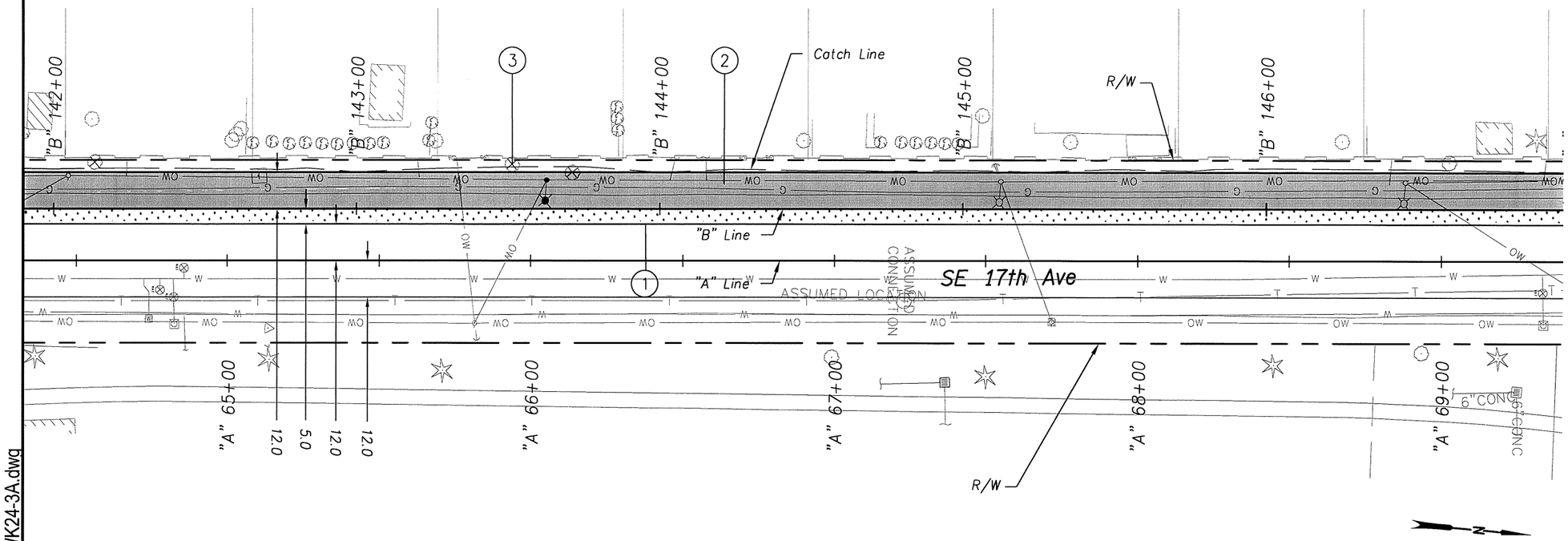

1. Sawcut and remove asph. pavement
2. Const. pervious asph. path
3. Remove trees within grading limits

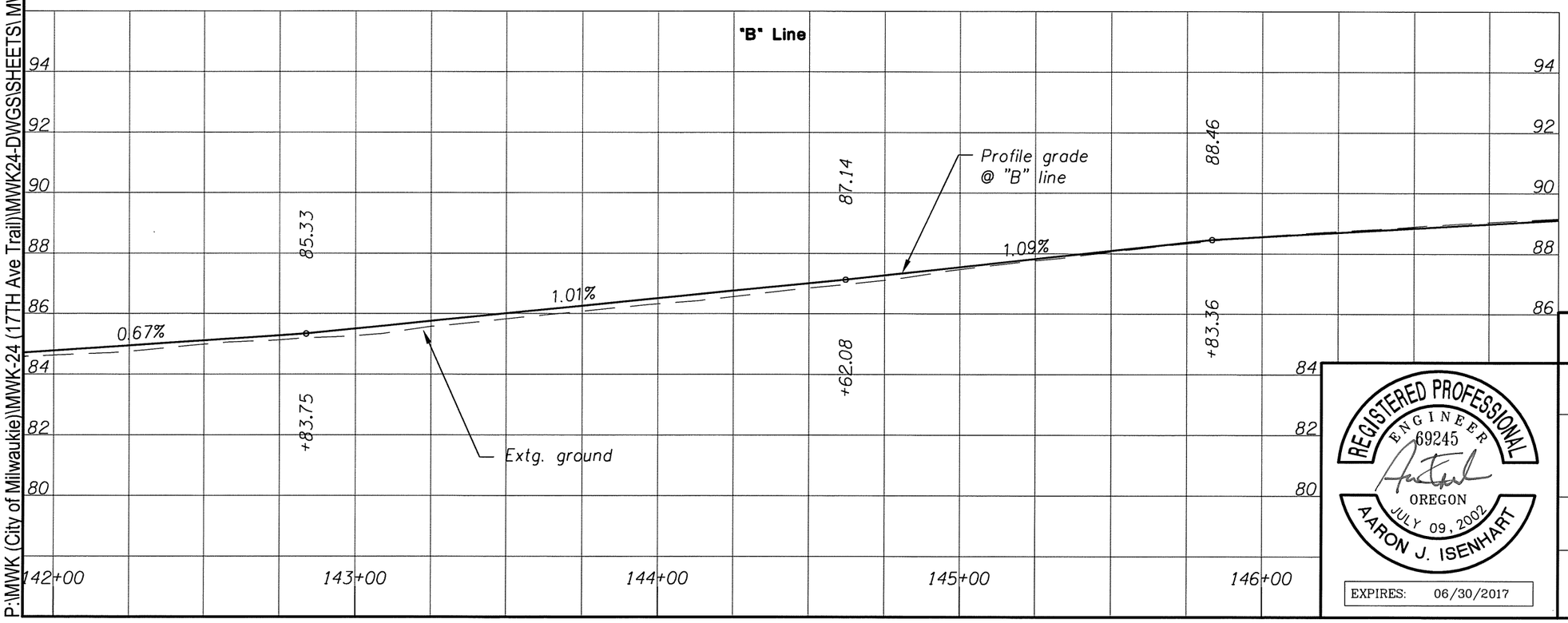

P:\MWK (City of Milwaukie)\MWK-24 (17TH Ave Trail)\MWK24-DWGS\SHEETS\MWK24-3A.dwg

REGISTERED PROFESSIONAL ENGINEER 69245 OREGON JULY 09, 2002 AARON J. ISENHART

EXPIRES: 06/30/2017

OREGON DEPARTMENT OF TRANSPORTATION

Harper Houf Peterson Righellis Inc.
ENGINEERS • PLANNERS • LANDSCAPE ARCHITECTS • SURVEYORS
205 SE Spokane Street, Suite 200 Portland, OR 97202 phone: 503.221.1131 www.hhpr.com fax: 503.221.1171

17TH AVE TRAIL: SE OCHOCO - SE MCLOUGHLIN
CITY OF MILWAUKIE
CLACKAMAS COUNTY

REVIEWED BY AJI
DESIGNED BY KJO
DRAFTED BY KJO

GENERAL CONSTRUCTION

SHEET NO. 12A

Sec. 26, T. 1S, R. 1E, W.M.

49V-026

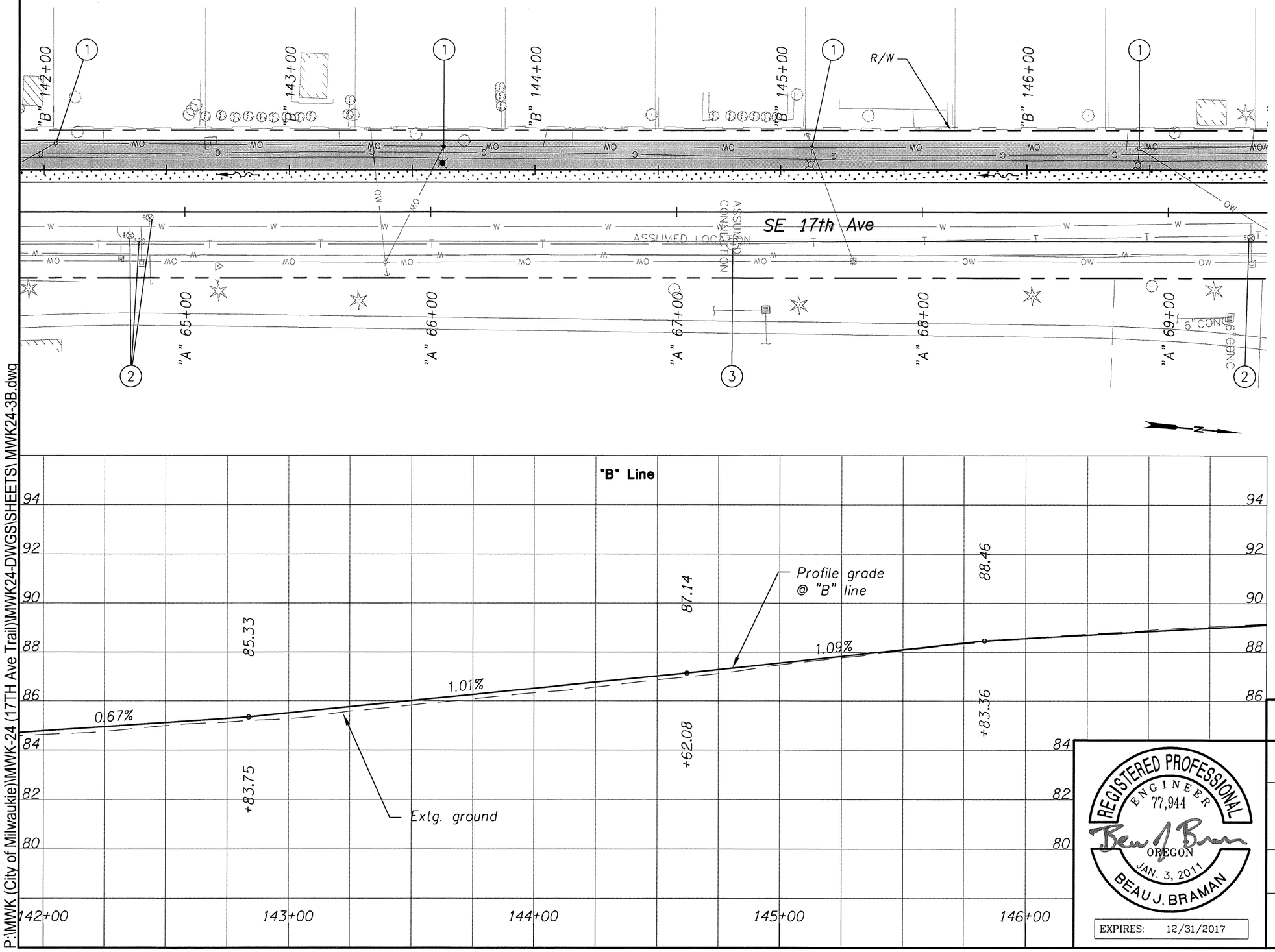

1. Relocate utility pole (by others) – 4
2. Adjust water valve – 4
3. Minor adjust manhole (by others)

P:\MWK (City of Milwaukie)\MWK-24 (17TH Ave Trail)\MWK24-DWGS\SHEETS\MWK24-3B.dwg

OREGON DEPARTMENT OF TRANSPORTATION

Harper Houf Peterson Righellis Inc.
ENGINEERS • PLANNERS • LANDSCAPE ARCHITECTS • SURVEYORS
205 SE Spokane Street, Suite 200 Portland, OR 97202 phone: 503.221.1131 www.hhpr.com fax: 503.221.1171

REGISTERED PROFESSIONAL ENGINEER 77,944 OREGON JAN. 3, 2011 BEAU J. BRAMAN

EXPIRES: 12/31/2017

17TH AVE TRAIL: SE OCHOCO - SE MCLOUGHLIN
CITY OF MILWAUKIE
CLACKAMAS COUNTY

REVIEWED BY AJI
DESIGNED BY BJB
DRAFTED BY KJO

DRAINAGE & UTILITIES

SHEET NO. 12B

49V-026

Sec. 26, T. 1S, R. 1E, W.M.

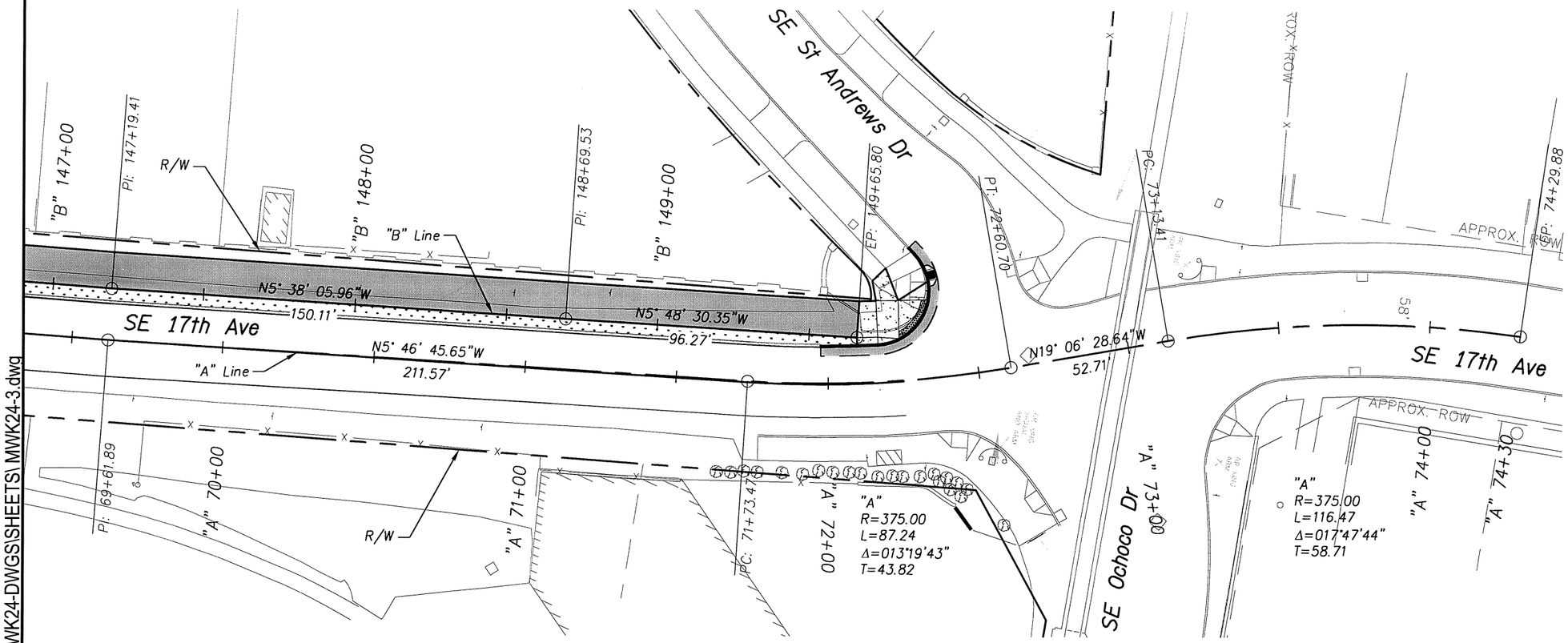

P:\MWK (City of Milwaukie)\MWK-24 (17TH Ave Trail)\MWK24-DWGS\SHEETS\ MWK24-3.dwg

REGISTERED PROFESSIONAL ENGINEER 69245 OREGON JULY 09, 2002 AARON J. ISENHART

EXPIRES: 06/30/2017

OREGON DEPARTMENT OF TRANSPORTATION

Harper Houf Peterson Righellis Inc.
ENGINEERS • PLANNERS • LANDSCAPE ARCHITECTS • SURVEYORS
205 SE Spokane Street, Suite 200 Portland, OR 97202 phone: 503.221.1131 www.hhpr.com fax: 503.221.1171

17TH AVE TRAIL: SE OCHOCO - SE MCLOUGHLIN
CITY OF MILWAUKIE
CLACKAMAS COUNTY

REVIEWED BY AJI
DESIGNED BY KJO
DRAFTED BY KJO

ALIGNMENT AND RIGHT OF WAY PLAN

SHEET NO. 13

49V-026

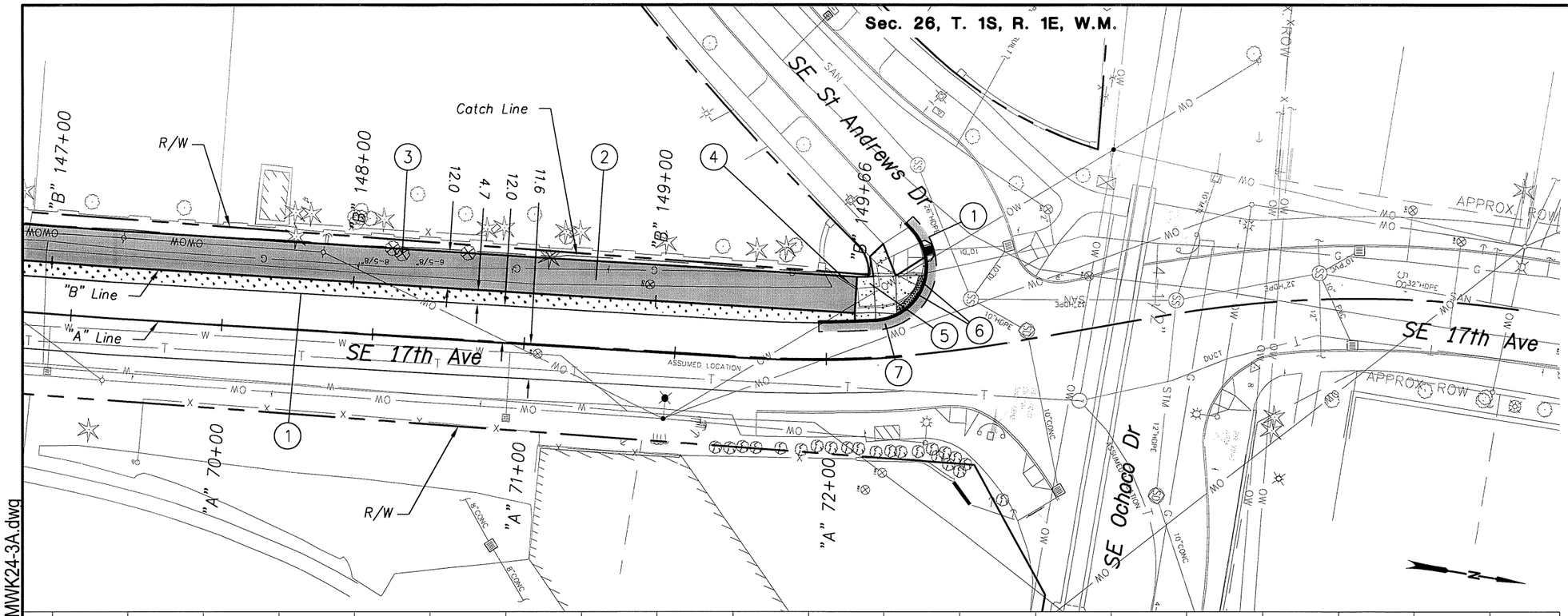

1. Sawcut and remove asph. pavement
2. Const. pervious asph. path
3. Remove trees within grading limits
4. Remove extg. curb
5. Remove extg. sidewalk and ramp
   Const. P.C. conc. sidewalk ramp
   (For details, see sht. 2E-6)
6. Remove extg. curb
   Const. standard curb
7. Const. asph. conc. pavement
   Sawcut extg. asph. at match lines
   (For details, see sht. 2B-7)

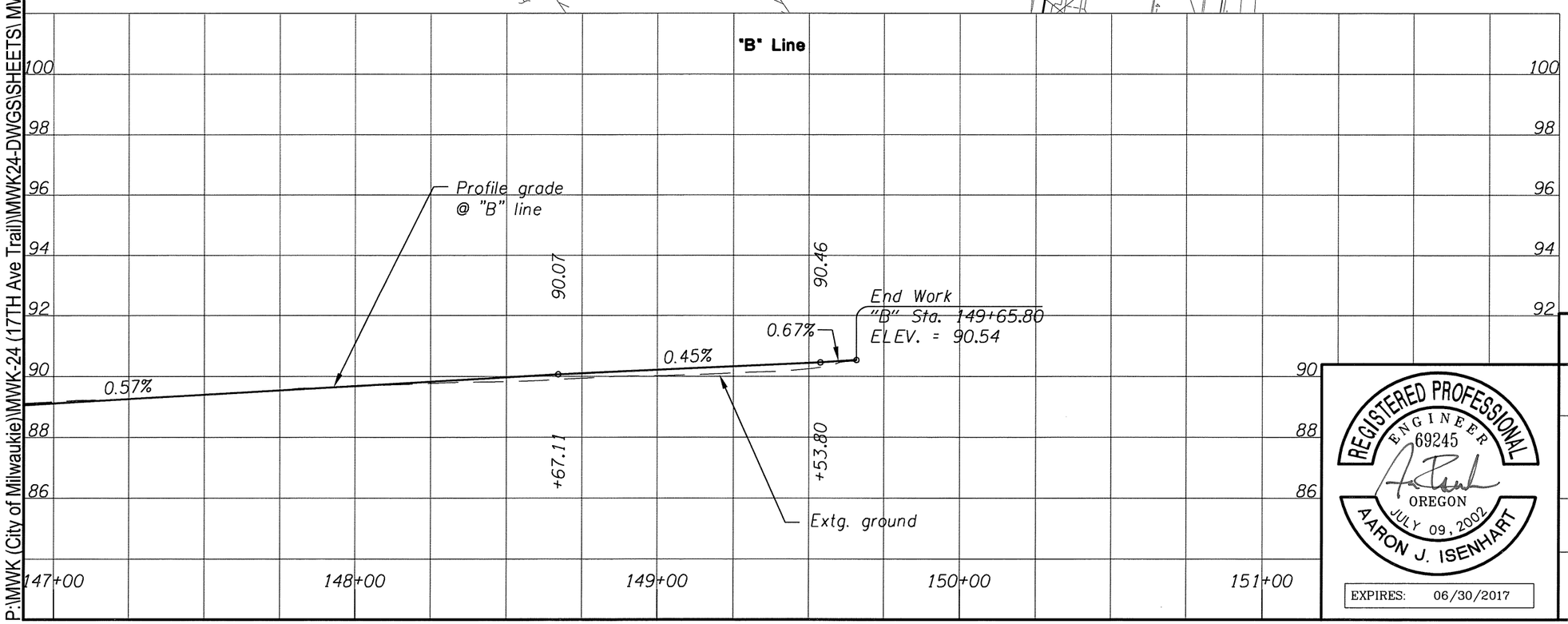

REGISTERED PROFESSIONAL ENGINEER
69245
OREGON
JULY 09, 2002
AARON J. ISENHART
EXPIRES: 06/30/2017

OREGON DEPARTMENT OF TRANSPORTATION

Harper Houf Peterson Righellis Inc.
ENGINEERS • PLANNERS • LANDSCAPE ARCHITECTS • SURVEYORS
205 SE Spokane Street, Suite 200 Portland, OR 97202 phone: 503.221.1131 www.hhpr.com fax: 503.221.1171

17TH AVE TRAIL: SE OCHOCO - SE MCLOUGHLIN
CITY OF MILWAUKIE
CLACKAMAS COUNTY

REVIEWED BY AJI
DESIGNED BY KJO
DRAFTED BY KJO

GENERAL CONSTRUCTION

SHEET NO. 13A

P:\MWK (City of Milwaukie)\MWK-24 (17TH Ave Trail)\MWK24-DWGS\SHEETS\ MWK24-3A.dwg

49V-026

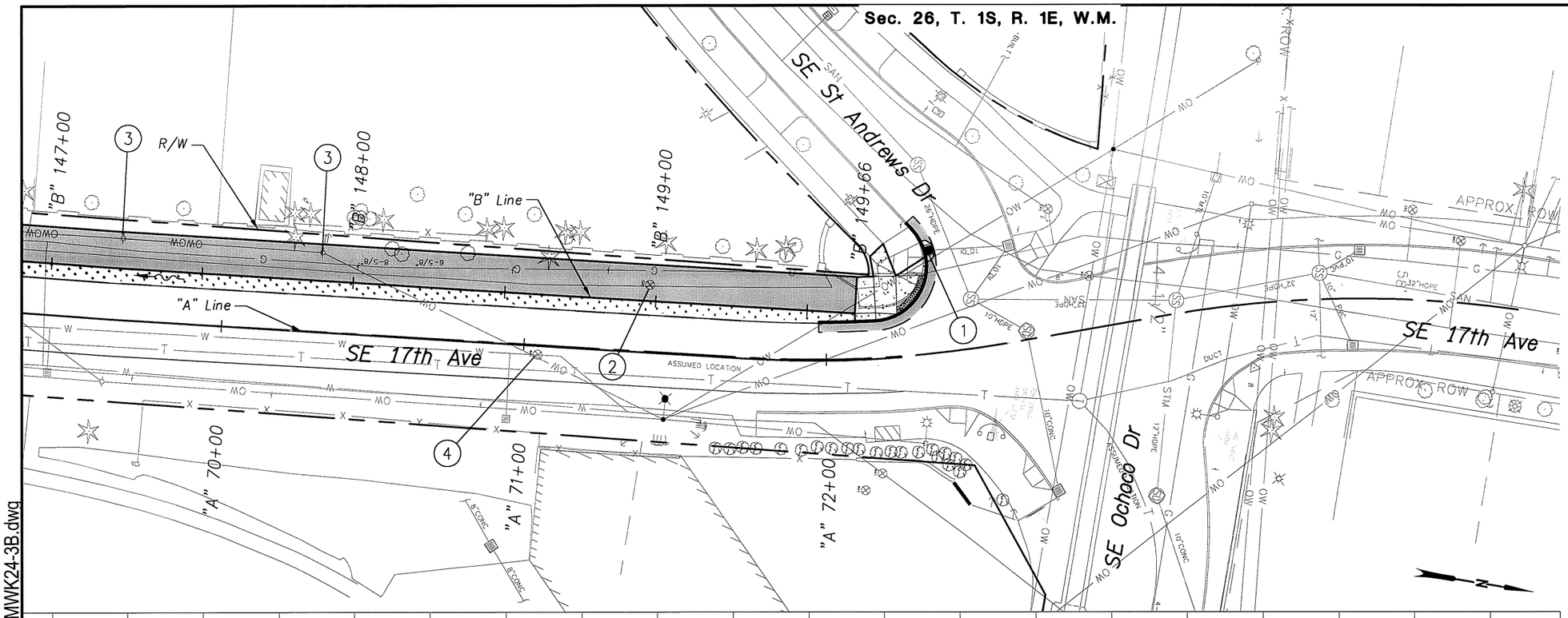

1. Sta. "A" 72+36.40, 33.6' Lt.
   Remove extg. inlet
   Const. type "G-2" (modified) catchbasin
   Rim elev. = 90.02
   Sump depth = 24"
   I.E. (10" out) – 88.30 (N)
   Connect to extg. storm sew. pipe
   (For details, see sht. 2B-2, 2B-4 and 2B-5)
2. Adjust gas valve (by others)
3. Relocate utility pole (by others) – 2
4. Adjust water valve

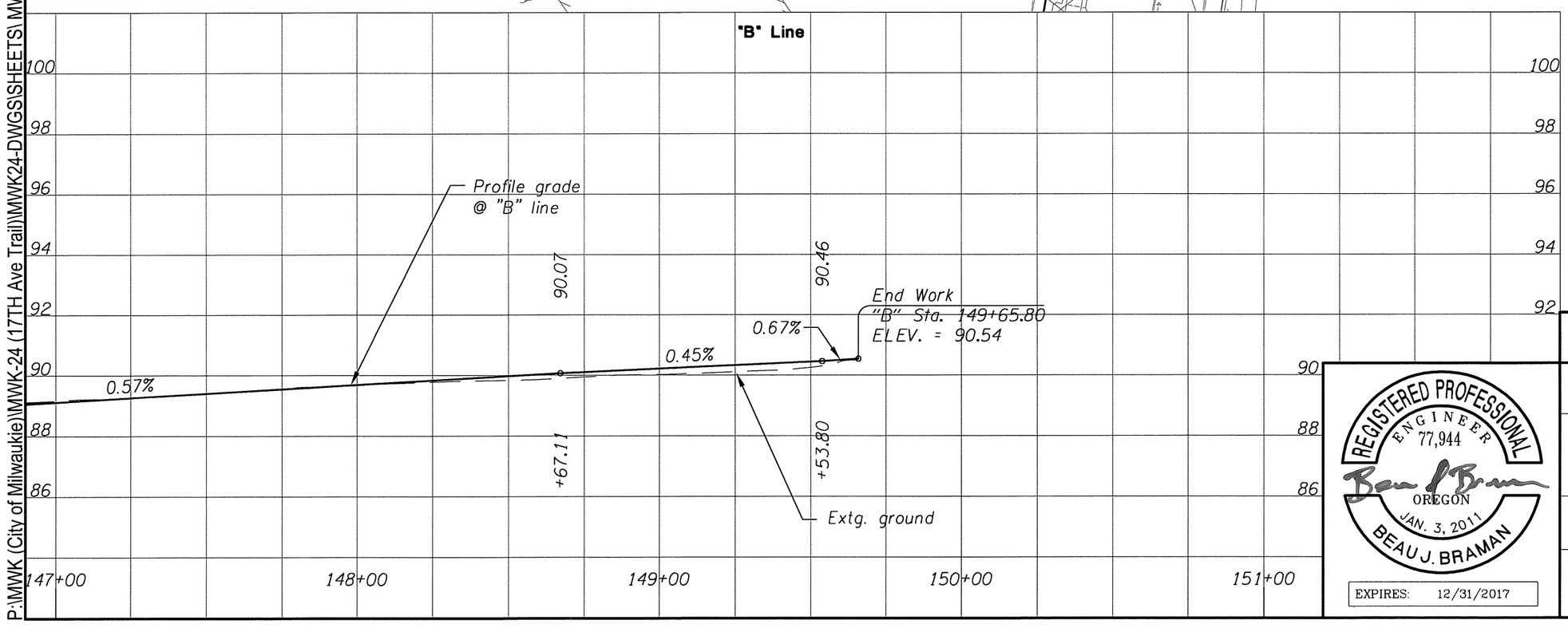

Note

G-2 inlet statians, offsets and rim elevations are to the center of the structure at the face of the curb at gutter elevation. All other structures are to the center of the structure. See standard drawings for any additional depression of gutterline at inlets.

REGISTERED PROFESSIONAL ENGINEER 77,944 OREGON JAN. 3, 2011 BEAU J. BRAMAN

EXPIRES: 12/31/2017

OREGON DEPARTMENT OF TRANSPORTATION

Harper Houf Peterson Righellis Inc.
ENGINEERS • PLANNERS • LANDSCAPE ARCHITECTS • SURVEYORS
205 SE Spokane Street, Suite 200 Portland, OR 97202 phone: 503.221.1131 www.hhpr.com fax: 503.221.1171

17TH AVE TRAIL: SE OCHOCO - SE MCLOUGHLIN
CITY OF MILWAUKIE
CLACKAMAS COUNTY

REVIEWED BY AJI
DESIGNED BY BJB
DRAFTED BY KJO

DRAINAGE & UTILITIES

SHEET NO. 13B

P:\MWK (City of Milwaukie)\MWK-24 (17TH Ave Trail)\MWK24-DWGS\SHEETS\ MWK24-3B.dwg

17TH AVENUE TRAIL: SE OCHOCO - SE McLOUGHLIN

EXISTING CONDITIONS:
GRASS ADJACENT TO ROADWAY AND VEGETATED ACCESS ROAD

DEVELOPED CONDITIONS:
MIXED-USED 0.99 MILE TRAIL

CONSTRUCTION ACTIVITIES TIME TABLE:

- CLEARING
- UTILITY ADJUSTMENTS
- TRAIL/PAVING
- STABILIZATION

TOTAL SITE AREA: 11.4 ACRES

TOTAL DISTURBED AREA: 2.7 ACRES

SITE SOIL CLASSIFICATION:
51A URBAN LAND - LATOURELL COMPLEX, 0-3% SLOPES - NOT RATED
53A LATOURELL COMPLEX, 0-3% SLOPES - SLIGHT
53B URBAN LAND - QUAFENO COMPLEX, 3-8% SLOPES - NOT RATED
82 URBAN LAND - NOT RATED
93E XEROCHREPTS - ROCK OUTCROP COMPLES, MODERATELY STEEP - MODERATE

RECEIVING BODIES OF WATER:
JOHNSON CREEK

PERMITTEE'S SITE INSPECTOR:
NAME: MARLIN DAVIDSON
COMPANY/AGENCY: HARPER HOUF PETERSON RIGHELLIS
PHONE: 503.221.1131
FAX: 503.221.1171
EMAIL: MARLIND@HHPR.COM
DESCRIPTION OF EXPERIENCE: ODOT INSPECTOR CERTIFICATION NO. 48968. TWO YEARS EXPERIENCE INSPECTING EROSION AND SEDIMENT CONTROL.

ATTENTION EXCAVATORS:
OREGON LAW REQUIRES YOU TO FOLLOW RULES ADOPTED BY THE OREGON UTILITY NOTIFICATION CENTER. THOSE RULES ARE SET FORTH IN OAR 952-001-0010 THROUGH OAR 952-001-0090. YOU MAY OBTAIN COPIES OF THESE RULES FROM THE CENTER BY CALLING 503-232-1987. IF YOU HAVE ANY QUESTIONS ABOUT THE RULES, YOU MAY CONTACT THE CENTER. YOU MUST NOTIFY THE CENTER AT LEAST TWO BUSINESS DAYS, BEFORE COMMENCING AN EXCAVATION. CALL 503-246-6699.

RATIONALE STATEMENT
A COMPREHENSIVE LIST OF AVAILABLE BEST MANAGEMENT PRACTICES (BMP) OPTIONS BASED ON DEQ's GUIDANCE MANUAL HAS BEEN REVIEWED TO COMPLETE THIS EROSION AND SEDIMENT CONTROL PLAN. SOME OF THE LISTED BMPs WERE NOT CHOSEN BECAUSE THEY WERE DETERMINED TO NOT EFFECTIVELY MANAGE EROSION PREVENTION AND SEDIMENT CONTROL FOR THIS PROJECT BASED ON SPECIFIC SITE CONDITIONS, INCLUDING SOIL CONDITIONS TOPOGRAPHIC CONSTRAINTS, ACCESSIBILITY TO THE SITE, AND OTHER RELATED CONDITIONS, AS THE PROJECT PROGRESSES AND THERE IS A NEED TO REVISE THE ESC PLAN, AN ACTION PLAN WILL BE SUBMITTED.

SWB
INITIAL

END OF PROJECT
STP-4865(018)
"B" STA 149+65.80

BEGINNING OF PROJECT
STP-4865(018)
"B" STA 100+00.00

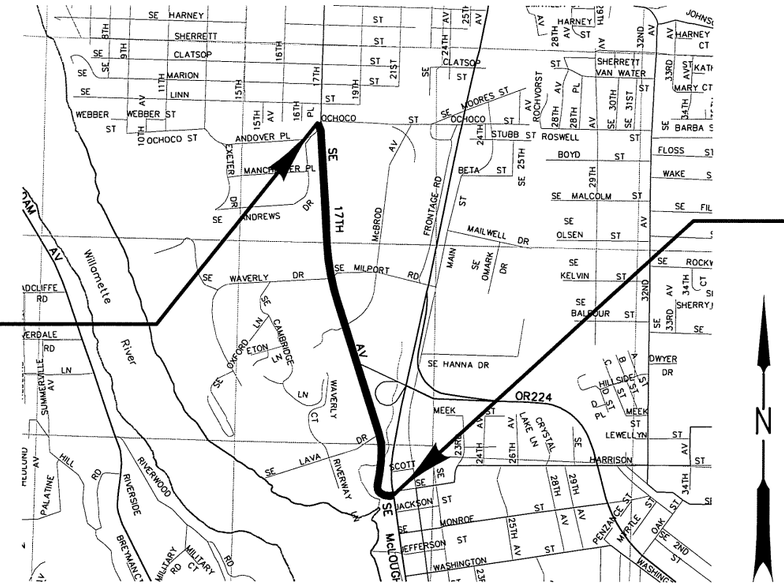

VICINITY MAP
SCALE: 1" = 2000'

N

BMP MATRIX FOR CONSTRUCTION PHASES

	CLEARING	UTILITY INSTALLATION	TRAIL CONSTRUCTION	FINAL STABILIZATION	WET WEATHER (OCT. 1 - MAY 31ST)
EROSION PREVENTION					
PRESERVE NATURAL VEGETATION	X**	X	X	X	X
GROUND COVER			X	X	X
HYDRAULIC APPLICATIONS	X		X	X	X
PLASTIC SHEETING			X		X
MATTING					
DUST CONTROL	X	X	X	X	
TEMPORARY/ PERMANENT SEEDING		X	X	X	X
BUFFER ZONE					
COMPOST EROSION BLANKET			X	X	X
OTHER:					
SEDIMENT CONTROL					
SEDIMENT FENCE (PERIMETER)					
SEDIMENT BARRIERS	X**	X	X	X	X
STRAW WATTLES					
FILTER BERM					
INLET PROTECTION	X**	X	X	X	X
DEWATERING					
SEDIMENT TRAP					
COMPOST FILTER SOCK	X**		X	X	X
OTHER:					
RUN OFF CONTROL					
CONSTRUCTION ENTRANCE					
PIPE SLOPE DRAIN					
OUTLET PROTECTION					
SURFACE ROUGHENING				X	
CHECK DAMS		X	X	X	X
OTHER:					
POLLUTION PREVENTION					
PROPER SIGNAGE	X	X	X	X	X
HAZ WASTE MGMT	X	X	X	X	X
SPILL KIT ON-SITE	X	X	X	X	X
CONCRETE WASHOUT AREA			NA		
OTHER:					

** SIGNIFIES BMP THAT WILL BE INSTALLED PRIOR TO ANY GROUND DISTURBING ACTIVITY.

THE PERMITEE IS REQUIRED TO MEET ALL THE CONDITIONS OF THE CITY OF MILWAUKIE'S 1200-CN PERMIT. THIS ESCP AND GENERAL CONDITIONS HAVE BEEN DEVELOPED TO FACILITATE COMPLIANCE WITH THE 1200-CN PERMIT REQUIREMENTS. IN CASES OF DISCREPANCIES OR OMISSIONS, THE 1200-CN PERMIT REQUIREMENTS SUPERCEDE REQUIREMENTS OF THIS PLAN.

INSPECTION FREQUENCY:

SITE CONDITION	MINIMUM FREQUENCY
1. ACTIVE PERIOD	DAILY WHEN STORMWATER RUNOFF, INCLUDING RUNOFF FROM SNOWMELT, IS OCCURRING.
2. PRIOR TO THE SITE BECOMING INACTIVE OR IN ANTICIPATION OF SITE INACCESSIBILITY.	ONCE TO ENSURE THAT EROSION AND SEDIMENT CONTROL MEASURES ARE IN WORKING ORDER. ANY NECESSARY MAINTENANCE AND REPAIR MUST BE MADE PRIOR TO LEAVING THE SITE.
3. INACTIVE PERIODS GREATER THAN SEVEN (7) CONSECUTIVE CALENDAR DAYS.	ONCE EVERY TWO (2) WEEKS.
4. PERIODS DURING WHICH THE SITE IS INACCESSIBLE DUE TO INCLEMENT WEATHER.	IF PRACTICAL, INSPECTIONS MUST OCCUR DAILY AT A RELEVANT AND ACCESSIBLE DISCHARGE POINT OR DOWNSTREAM LOCATION.

- HOLD A PRE-CON MEETING OF PROJECT CONSTRUCTION PERSONNEL THAT INCLUDES THE EC INSPECTOR.
- ALL INSPECTIONS MUST BE MADE IN ACCORDANCE WITH DEQ 1200C PERMIT REQUIREMENTS.
- INSPECTION LOGS MUST BE KEPT IN ACCORDANCE WITH DEQ 1200C PERMIT REQUIREMENTS.
- CHANGES TO THE APPROVED ESC PLAN MUST BE SUBMITTED TO DEQ IN THE FORM OF AN ACTION PLAN.

REGISTERED
672
Scott W. Banker
OREGON
06/19/08
LANDSCAPE ARCHITECT

OREGON DEPARTMENT OF TRANSPORTATION

Harper Houf Peterson Righellis Inc.
ENGINEERS • PLANNERS • LANDSCAPE ARCHITECTS • SURVEYORS
205 SE Spokane Street, Suite 200 Portland, OR 97202 phone: 503.221.1131 www.hhpr.com fax: 503.221.1171

17TH AVE TRAIL: SE OCHOCO - SE MCLOUGHLIN
CITY OF MILWAUKIE
CLACKAMAS COUNTY

REVIEWED BY AJI
DESIGNED BY SWB
DRAFTED BY BDJ

EROSION AND SEDIMENT CONTROL COVER SHEET

SHEET NO. GA

P:\MWK (City of Milwaukie)\MWK-24 (17TH Ave Trail)\MWK24-DWGS\SHEETS\ MWK24-GA.dwg

CITY OF MILWAUKIE EROSION AND SEDIMENT CONTROL PLAN DRAWING NOTES:

1. ALL EROSION PREVENTION MEASURES SHALL BE IN PLACE, FUNCTIONAL AND APPROVED PRIOR TO COMMENCEMENT OF CONSTUCTION ACTIVITIES. CONTRACTOR SHALL MAINTAIN ALL SOIL EROSION AND SITE DRAINAGE FACILITIES THROUGHOUT CONSTRUCTION.
2. AFTER SITE RESTORATION IS COMPLETE AND WHEN APPROVED BY THE ENGINEER, ALL TEMPORARY EROSION CONTROL MEASURES SHALL BE REMOVED.
3. DUMPING OR THE DISPOSAL OF SPOIL MATERIALS INTO ANY STREAM, CORRIDORS, WETLANDS, SURFACE WATERS OR ANY PUBLIC OR PRIVATE PROPERTY NOT SPECIFIED FOR SAID PURPOSE IS PROHIBITED.
4. PUMPING OF SEDIMENT-LADEN WATER FROM TRENCHES OR OTHER EXCAVATIONS INTO ANY SURFACE WATER, PIPED SYSTEM OR ON ANY PUBLIC OR PRIVATE PROPERTY NOT SPECIFIED FOR SAID PURPOSE IS PROHIBITED.
5. SEDIMENT PREVENTION MUST BE INSTALLED AND MAINTAINED ON ALL DOWN GRADENT SIDES OF THE CONSTRUCTION SITE AT ALL TIMES DURING CONSTRUCTION.
6. ALL ACTIVE CATCH BASINS MUST HAVE SEDIMENT PREVENTION INSTALLED AND MAINTAINED AT ALL TIMES DURING CONSTRUCTION.
7. ALL SAW CUTTING SLURRY / DEBRIS MUST BE VACUUMED / REMOVED FROM ALL IMPERVIOUS SURFACES.
8. WATER TIGHT TRUCKS MUST BE USED TO TRANSPORT SATURATED SOILS FROM THE CONSTRUCTION SITE. AN APPROVED EQUIVALANT IS TO DRAIN THE SOIL ON-SITE AT A DESIGNATED LOCATION USING APPROPRIATE BMP'S; SOIL MUST BE DRAINED SUFFICIANTLEY FOR MINIMAL SPILLAGE.
9. TEMPORARY STABILIZATION OR COVERING OF SOIL STOCKPILES MUST OCCUR AT THE END OF EACH WORK DAY OR OTHER APPROVED BMP'S MUST BE IMPLEMENTED TO PREVENT TURBID DISCHARGES TO SURFACE WATERS.
10. DEVELOP AND MAINTAIN ONSITE A WRITTEN SPILL PREVENTION AND RESPONSE PROCEDURE.
11. ANY USE OF TOXIC OR OTHER HAZARDOUS MATERIALS MUST INCLUDE PROPER STORAGE, APPLICATION AND DISPOSAL.
12. SEDIMENT MUST NOT BE WASHED INTO STORM SEWERS, DRAINAGE WAYS OR WATER BODIES. DRY SWEEPING MUST BE USED TO CLEAN UP RELEASED SEDIMENTS.
13. AN AREA MUST BE PROVIDED FOR THE WASHING OUT OF CONCRETE TRUCKS IN A LOCATION THAT DOES NOT PROVIDE RUN-OFF THAT CAN ENTER THE STORM SYSTEM.
14. SWEEPINGS FROM EXPOSED AGGREGATE CONCRETE SHALL NOT BE TRANSFERRED TO THE STORM SYSTEM. SWEEPINGS SHALL BE PICKED UP AND DISPOSED IN THE TRASH.
15. AVOID PAVING IN WET WEATHER WHEN PAVING CHEMICALS CAN RUN-OFF INTO THE STORM SYSTEM.
16. COVER CATCH BASINS, MANHOLES AND OTHER DISCHARGE POINTS WHEN APPLYING SEAL COAT, TACK COAT ECT. TO PREVENT INTRODUCING THESE MATERIALS TO THE STORM SYSTEM.
17. TRACKING OF DIRT AND DEBRIS ONTO STREETS IS NOT ALLOWED. ALL TRACKING AND DEBRIS ON STREETS SURFACE MUST BE REMOVED AT THE END OF EACH DAY OR SOONER IF IT CAN BE SPREAD BY TRAFFIC OR REACH THE PUBLIC STORM SYSTEM.
18. GRAVEL OR DIRT CURB JUMPS ARE NOT ALLOWED (USE WOODEN STEP STYLE)
19. GRAVEL CONSTRUCTION ENTRANCES MUST BE INSTALLED AT THE START OF THE PROJECT TO PREVENT TRACKING AND FOR INITIAL INSPECTION APPROVAL.

The Implementation Of These Erosion Control Plans And The Construction, Maintenance, Replacement And Upgrading Of These Facilities Are The Responsibility Of The Contractor Until All Construction Is Completed And Approved.

Install All Erosion Control Measures Adjacent To Jurisdictional Wetlands/Waters And Buffers Prior To Commencing Work Operations Adjacent To These Areas.

Develop A Revised Plan Of The Erosion Control Facilities Shown In Accordance With The Requirements Of Sec. 00280, Supplemental Standard Specifications. This Plan Must Be Constructed In Conjunction With All Clearing And Prior To Grading Activities. Construct In Such A Manner As To Insure That Sediment And Sediment-Laden Water Does Not Enter The Drainage System, Roadway, Or Violate Applicable Water Quality Standards. Construct Controls In Segments Applicable To Each Staging Phase.

The Erosion Control Facilities Shown On This Plan Are The Minimum Requirements For Anticipated Site Conditions. During The Construction Period, These Facilities Shall Be Upgraded For Unexpected Storm Events And To Insure That Sediment And Sediment-Laden Water Does Not Leave The Site.

Stabilized Construction Entrances Shall Be Installed At the Beginning Of Construction And Maintained For The Duration Of The Project. Additional Measures May Be Required To Insure That All Paved Areas Are Kept Clean For The Duration Of The Project.

Install Measures Within The Right-Of-Way or Easements.

Protect All Inlets During Surface Grinding, Paving, And Earthwork Operations To Prevent Pollutants From Entering Storm Water System.

Seed And Mulch All Disturbed Areas Open For 14-Days, Where Work Operations Have Discontinued And When Land Disturbing Operation Has Been Completed. Refer To Plant Schedule, Sheet GN-2 For Seed Mixes.

Check Dams (Type 3) Shall Be Spaced In Accordance With The Following Slope Ranges:
0 - 2% Gradient = 100' O.C., 2 - 3% Gradient = 50' O.C., and 3 - 5% Gradient = 30" O.C.

Contractor To Cover Stockpiles With Plastic Sheeting When Stockpiles Are Open For 14-Days, Where Work Operations Have Discontinued, And During Wet Weather.

Sediment Barrier (Type 8) (Compost Filter Sock)

Inlet Protection (Type 3)

Check dam (Type 6) (Compost filter sock)

Compost Erosion Blanket

STANDARD DRAWINGS

- ☐ RD1000 Construction Entrances
- ■ RD1005 Check Dams (Type 1, 3 and 4)
- ■ RD1006 Check Dams (Type 2 and 6)
- ■ RD1010 Inlet Protection (Type 2, 3, 6 and 7)
- ☐ RD1015 Inlet Protection (Type 4)
- ☐ RD1030 Sediment Barrier (Type 2, 3 and 4)
- ☐ RD1031 Sediment Barrier (Type 5 and 6)
- ■ RD1032 Sediment Barrier (Type 8)
- ☐ RD1033 Sediment Barrier (Type 9)
- ☐ RD1040 Sediment Fence
- ☐ RD1045 Temporary Slope Drain with Energy Dissipator
- ☐ RD1050 Temporary Scour Basin / Energy Dissipator
- ☐ RD1055 Slope and Channel Matting
- ☐ RD1060 Tire Wash Facility (Type 1 and 2)
- ☐ RD1065 Sediment Trap
- ☐ RD1070 Concrete Truck Wash Out

REGISTERED 672 Scott W. Banker OREGON 06/19/08 LANDSCAPE ARCHITECT

OREGON DEPARTMENT OF TRANSPORTATION

Harper Houf Peterson Righellis Inc.
ENGINEERS • PLANNERS • LANDSCAPE ARCHITECTS • SURVEYORS
205 SE Spokane Street, Suite 200 Portland, OR 97202 phone: 503.221.1131 www.hhpr.com fax: 503.221.1171

17TH AVE TRAIL: SE OCHOCO - SE MCLOUGHLIN
CITY OF MILWAUKIE
CLACKAMAS COUNTY

REVIEWED BY AJI
DESIGNED BY SWB
DRAFTED BY BDJ

EROSION CONTROL DETAILS

SHEET NO. GA-2

P:\MWK (City of Milwaukie)\MWK-24 (17TH Ave Trail)\MWK24-DWGS\SHEETS\ MWK24-GA.dwg

COMPOST EROSION BLANKET

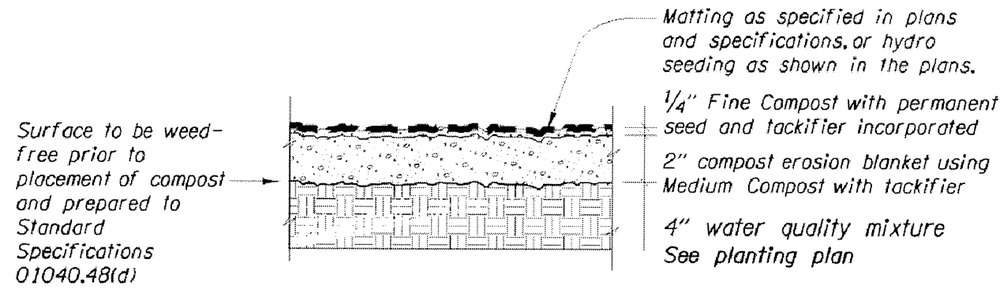

APPLICATION - STEEP SLOPES, SHALLOW DITCHES & BIO-SWALES
N.T.S.

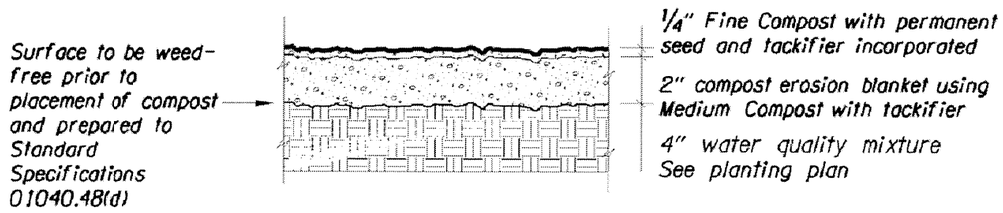

APPLICATION - TEMPORARY/PERMANENT VEGETATIVE COVER
N.T.S.

det6017.dgn 01-Jan-2015

DET6017

The selection and use of this detail, while designed in accordance with generally accepted engineering principles and practices, is the sole responsibility of the user and should not be used without consulting a Registered Professional Engineer.

OREGON DEPARTMENT OF TRANSPORTATION
TECHNICAL SERVICES
DETAILS

COMPOST EROSION BLANKET — DETAIL NO DET6017

REGISTERED 672 Scott W. Banker OREGON 06/19/08 LANDSCAPE ARCHITECT

OREGON DEPARTMENT OF TRANSPORTATION

Harper Houf Peterson Righellis Inc.
ENGINEERS • PLANNERS • LANDSCAPE ARCHITECTS • SURVEYORS
205 SE Spokane Street, Suite 200 Portland, OR 97202 phone: 503.221.1131 www.hhpr.com fax: 503.221.1171

17TH AVE TRAIL: SE OCHOCO - SE MCLOUGHLIN
CITY OF MILWAUKIE
CLACKAMAS COUNTY

REVIEWED BY AJI
DESIGNED BY SWB
DRAFTED BY BDJ

EROSION CONTROL DETAILS — SHEET NO. GA-3

P:\MWK (City of Milwaukie)\MWK-24 (17TH Ave Trail)\MWK24-DWGS\SHEETS\MWK24-GA.dwg

49V-026

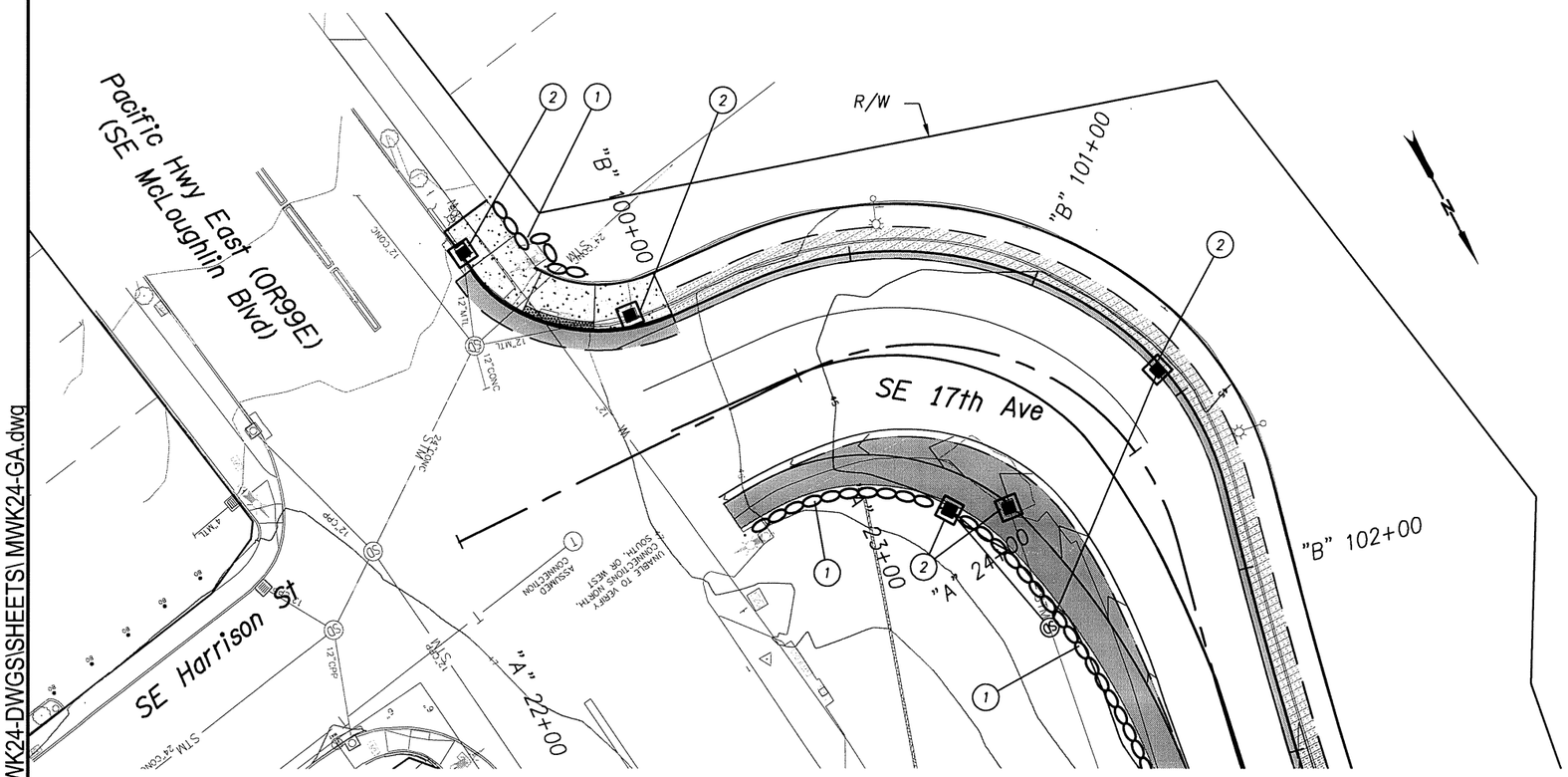

1. Inst. sediment barrier type 8 (See drg. no. RD1032)
2. Inst. inlet protection type 3 (See drg. no. RD1010)

REGISTERED
672
Scott W. Banker
OREGON
06/19/08
LANDSCAPE ARCHITECT

OREGON DEPARTMENT OF TRANSPORTATION

Harper Houf Peterson Righellis Inc.
ENGINEERS • PLANNERS • LANDSCAPE ARCHITECTS • SURVEYORS
205 SE Spokane Street, Suite 200 Portland, OR 97202 phone: 503.221.1131 www.hhpr.com fax: 503.221.1171

17TH AVE TRAIL: SE OCHOCO - SE MCLOUGHLIN
CITY OF MILWAUKIE
CLACKAMAS COUNTY

REVIEWED BY AJI
DESIGNED BY SWB
DRAFTED BY BDJ

EROSION CONTROL

SHEET NO. GA-4

P:\MWK (City of Milwaukie)\MWK-24 (17TH Ave Trail)\MWK24-DWGS\SHEETS\ MWK24-GA.dwg

49V-026

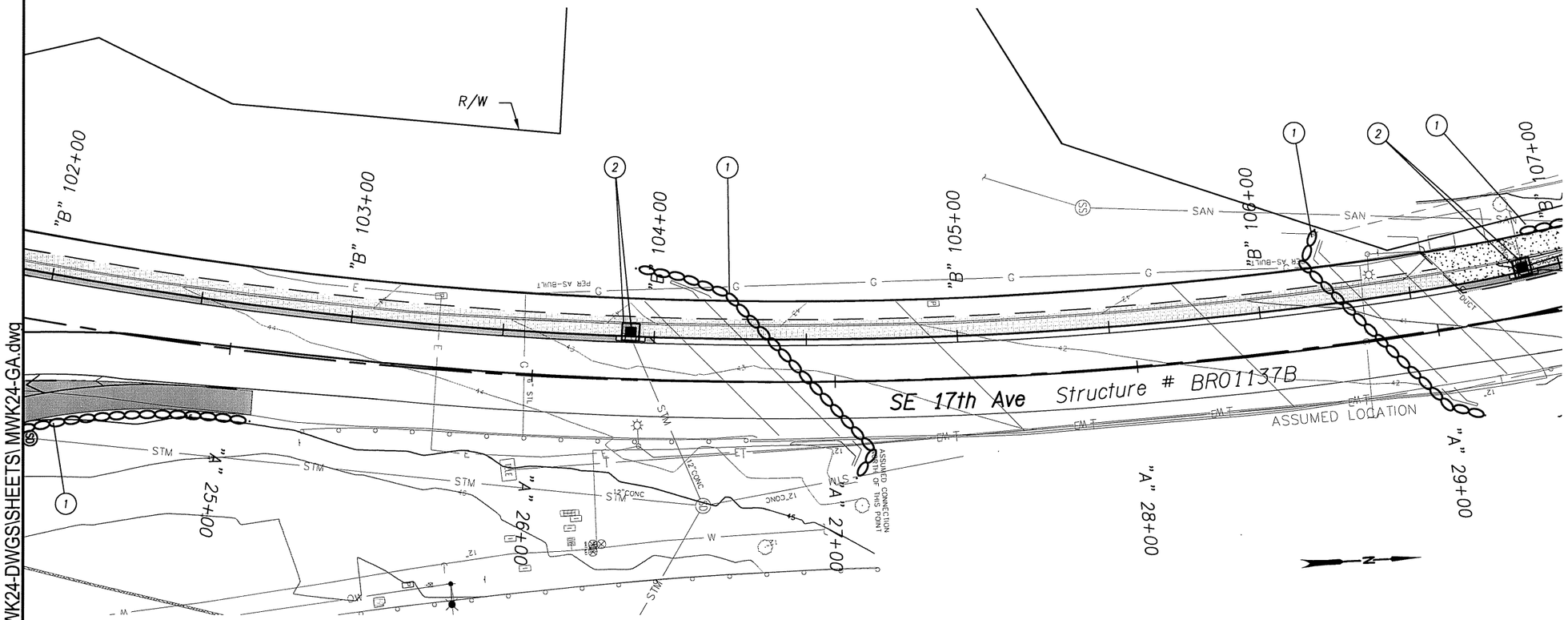

1 Inst. sediment barrier type 8

2 Inst. inlet protection type 3

Note: Sediment barrier shown on this sheet to be installed under structure #BR01137B

P:\MWK (City of Milwaukie)\MWK-24 (17TH Ave Trail)\MWK24-DWGS\SHEETS\ MWK24-GA.dwg

REGISTERED 672 Scott W. Banker OREGON 06/19/08 LANDSCAPE ARCHITECT

OREGON DEPARTMENT OF TRANSPORTATION

Harper Houf Peterson Righellis Inc.
ENGINEERS • PLANNERS • LANDSCAPE ARCHITECTS • SURVEYORS
205 SE Spokane Street, Suite 200 Portland, OR 97202 phone: 503.221.1131 www.hhpr.com fax: 503.221.1171

17TH AVE TRAIL: SE OCHOCO - SE MCLOUGHLIN
CITY OF MILWAUKIE
CLACKAMAS COUNTY

REVIEWED BY AJI
DESIGNED BY SWB
DRAFTED BY BDJ

EROSION CONTROL

SHEET NO. GA-5

49V-026

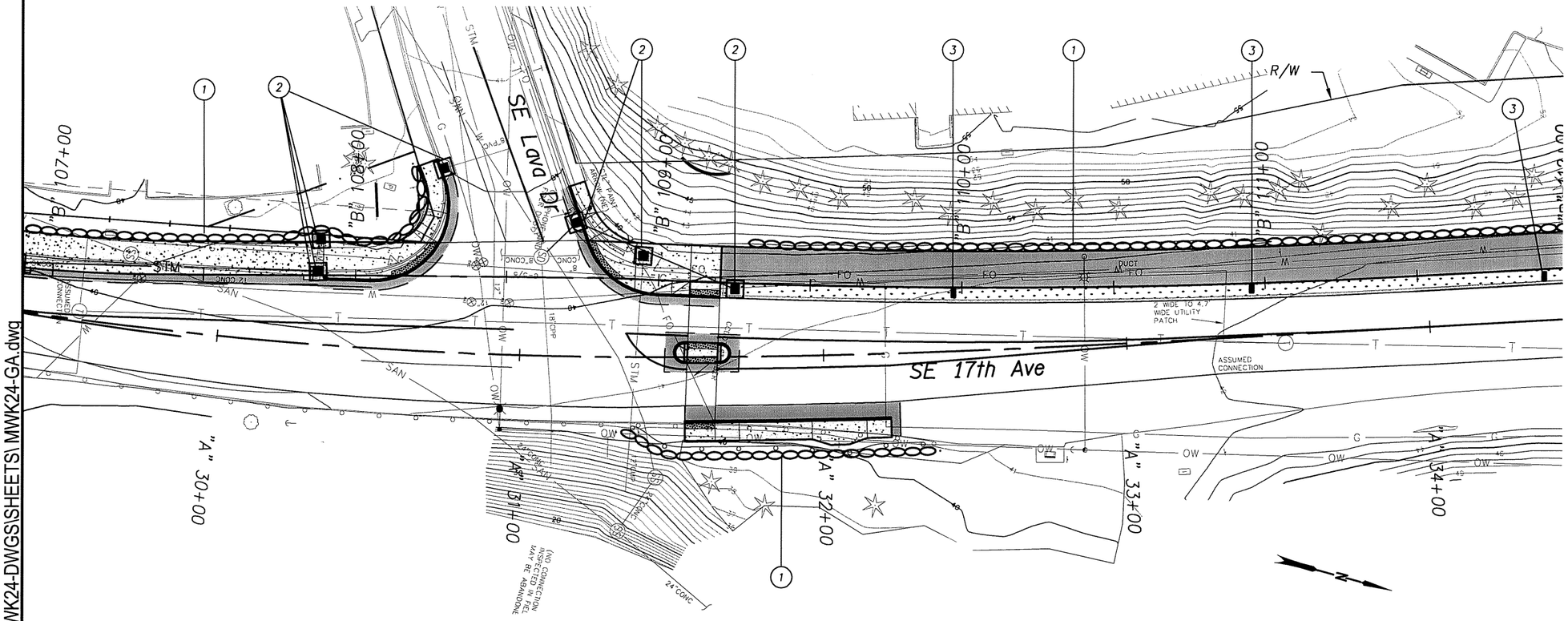

1 Inst. sediment barrier type 8

2 Inst. inlet protection type 3

3 Inst. compost filter sock check dam type 6
(See drg. no. RD1006)

REGISTERED
672
Scott W. Banker
OREGON
06/19/08
LANDSCAPE ARCHITECT

OREGON DEPARTMENT OF TRANSPORTATION

Harper Houf Peterson Righellis Inc.
ENGINEERS • PLANNERS • LANDSCAPE ARCHITECTS • SURVEYORS
205 SE Spokane Street, Suite 200 Portland, OR 97202 phone: 503.221.1131 www.hhpr.com fax: 503.221.1171

17TH AVE TRAIL: SE OCHOCO - SE MCLOUGHLIN
CITY OF MILWAUKIE
CLACKAMAS COUNTY

REVIEWED BY AJI
DESIGNED BY SWB
DRAFTED BY BDJ

EROSION CONTROL

SHEET NO. GA-6

P:\MWK (City of Milwaukie)\MWK-24 (17TH Ave Trail)\MWK24-DWGS\SHEETS\ MWK24-GA.dwg

49V-026

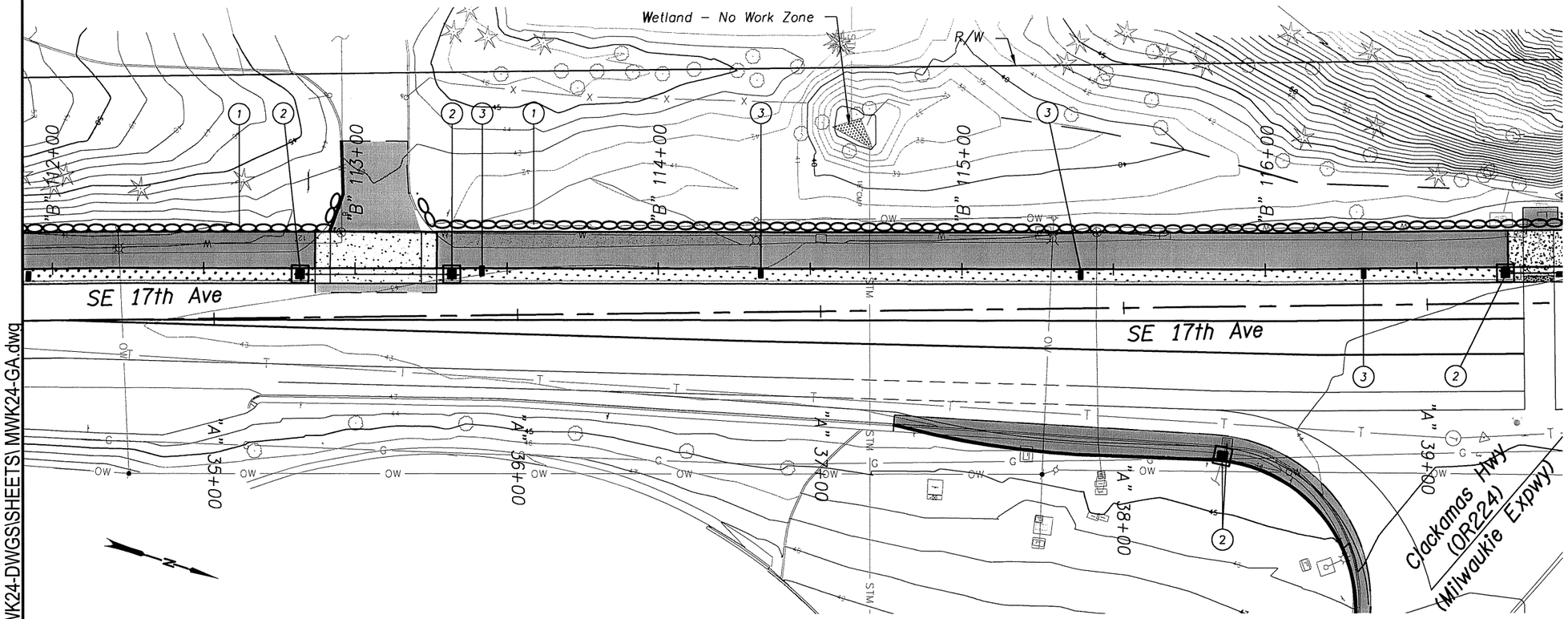

1. Inst. sediment barrier type 8
2. Inst. inlet protection type 3
3. Inst. compost filter sock check dam type 6

REGISTERED
672
Scott W. Banker
OREGON
06/19/08
LANDSCAPE ARCHITECT

OREGON DEPARTMENT OF TRANSPORTATION

Harper Houf Peterson Righellis Inc.
ENGINEERS • PLANNERS • LANDSCAPE ARCHITECTS • SURVEYORS
205 SE Spokane Street, Suite 200 Portland, OR 97202 phone: 503.221.1131 www.hhpr.com fax: 503.221.1171

17TH AVE TRAIL: SE OCHOCO - SE MCLOUGHLIN
CITY OF MILWAUKIE
CLACKAMAS COUNTY

REVIEWED BY AJI
DESIGNED BY SWB
DRAFTED BY BDJ

EROSION CONTROL

SHEET NO. GA-7

P:\MWK (City of Milwaukie)\MWK-24 (17TH Ave Trail)\MWK24-DWGS\SHEETS\ MWK24-GA.dwg

49V-026

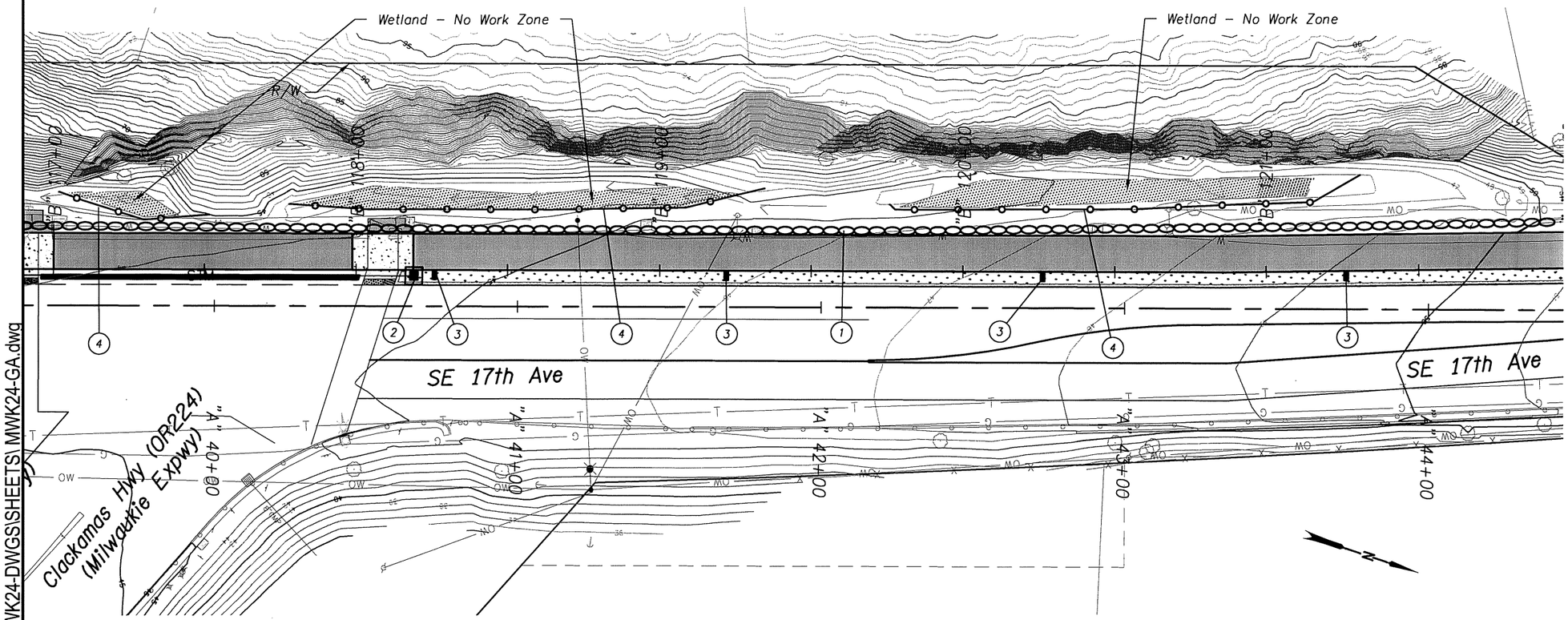

1. Inst. sediment barrier type 8
2. Inst. inlet protection type 3
3. Inst. compost filter sock check dam type 6
4. Inst. temp. orange barrier fence at wetlands (per QPL)

REGISTERED
672
Scott W. Banker
OREGON
06/19/08
LANDSCAPE ARCHITECT

OREGON DEPARTMENT OF TRANSPORTATION

Harper Houf Peterson Righellis Inc.
ENGINEERS • PLANNERS • LANDSCAPE ARCHITECTS • SURVEYORS
205 SE Spokane Street, Suite 200 Portland, OR 97202 phone: 503.221.1131 www.hhpr.com fax: 503.221.1171

17TH AVE TRAIL: SE OCHOCO - SE MCLOUGHLIN
CITY OF MILWAUKIE
CLACKAMAS COUNTY

REVIEWED BY AJI
DESIGNED BY SWB
DRAFTED BY BDJ

EROSION CONTROL

SHEET NO. GA-8

P:\MWK (City of Milwaukie)\MWK-24 (17TH Ave Trail)\MWK24-DWGS\SHEETS\ MWK24-GA.dwg

49V-026

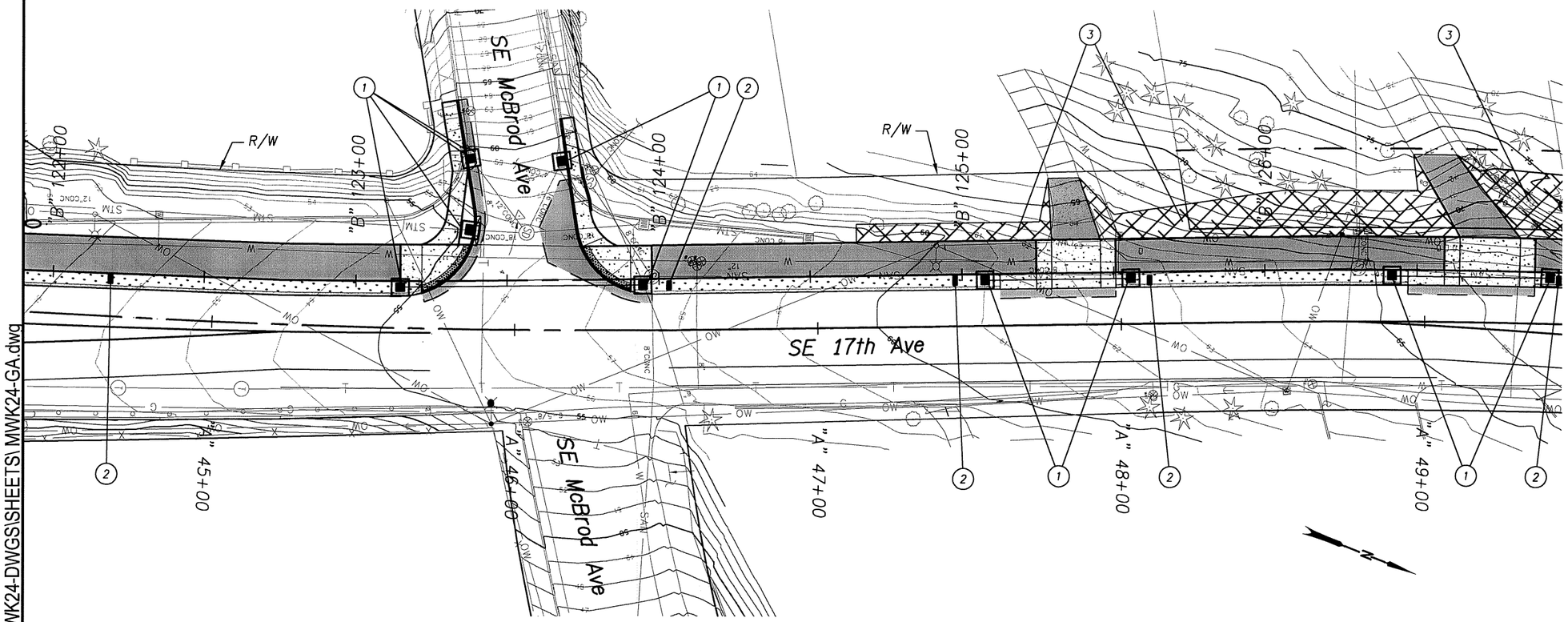

1. Inst. inlet protection type 3
2. Inst. compost filtersock Check dam, type 6
3. Inst. compost erosion blanket with tackifier (For details, see det. no. DET6017, sht. GA-3)

REGISTERED
672
Scott W. Banker
OREGON
06/19/08
LANDSCAPE ARCHITECT

OREGON DEPARTMENT OF TRANSPORTATION

Harper Houf Peterson Righellis Inc.
ENGINEERS • PLANNERS • LANDSCAPE ARCHITECTS • SURVEYORS
205 SE Spokane Street, Suite 200 Portland, OR 97202 phone: 503.221.1131 www.hhpr.com fax: 503.221.1171

17TH AVE TRAIL: SE OCHOCO - SE MCLOUGHLIN
CITY OF MILWAUKIE
CLACKAMAS COUNTY

REVIEWED BY AJI
DESIGNED BY SWB
DRAFTED BY BDJ

EROSION CONTROL

SHEET NO. GA-9

P:\MWK (City of Milwaukie)\MWK-24 (17TH Ave Trail)\MWK24-DWGS\SHEETS\ MWK24-GA.dwg

49V-026

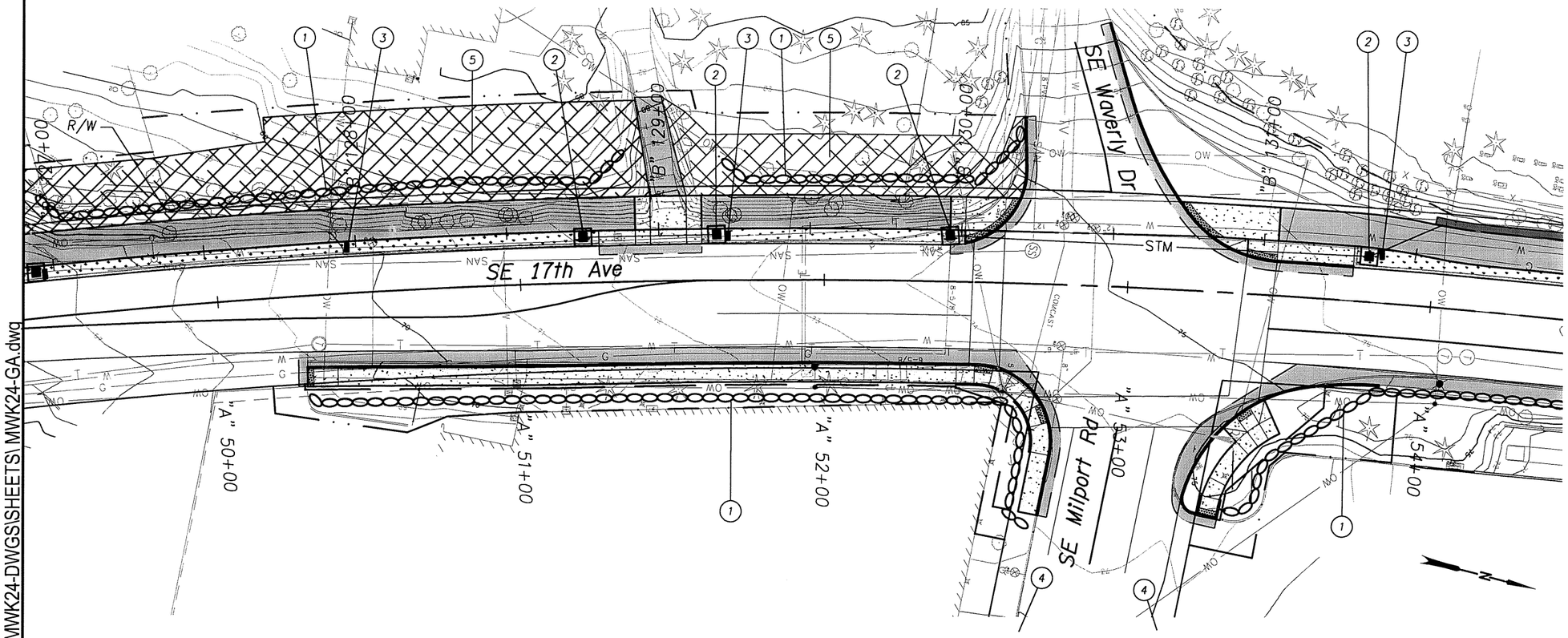

1. Inst. sediment barrier type 8
2. Inst. inlet protection type 3
3. Inst. compost filter sock check dam type 6
4. Inst. biofilter bag check dam type 3 in ditch beyond disturbed area (See drg. no. RD1005)
5. Inst. compost erosion blanket with tackifier (For details, see det. no. DET6017, sht. GA-3)

REGISTERED
672
Scott W. Banker
OREGON
06/19/08
LANDSCAPE ARCHITECT

OREGON DEPARTMENT OF TRANSPORTATION

Harper Houf Peterson Righellis Inc.
ENGINEERS • PLANNERS • LANDSCAPE ARCHITECTS • SURVEYORS
205 SE Spokane Street, Suite 200 Portland, OR 97202 phone: 503.221.1131 www.hhpr.com fax: 503.221.1171

17TH AVE TRAIL: SE OCHOCO - SE MCLOUGHLIN
CITY OF MILWAUKIE
CLACKAMAS COUNTY

REVIEWED BY AJI
DESIGNED BY SWB
DRAFTED BY BDJ

EROSION CONTROL

SHEET NO. GA-10

P:\MWK (City of Milwaukie)\MWK-24 (17TH Ave Trail)\MWK24-DWGS\SHEETS\ MWK24-GA.dwg

49V-026

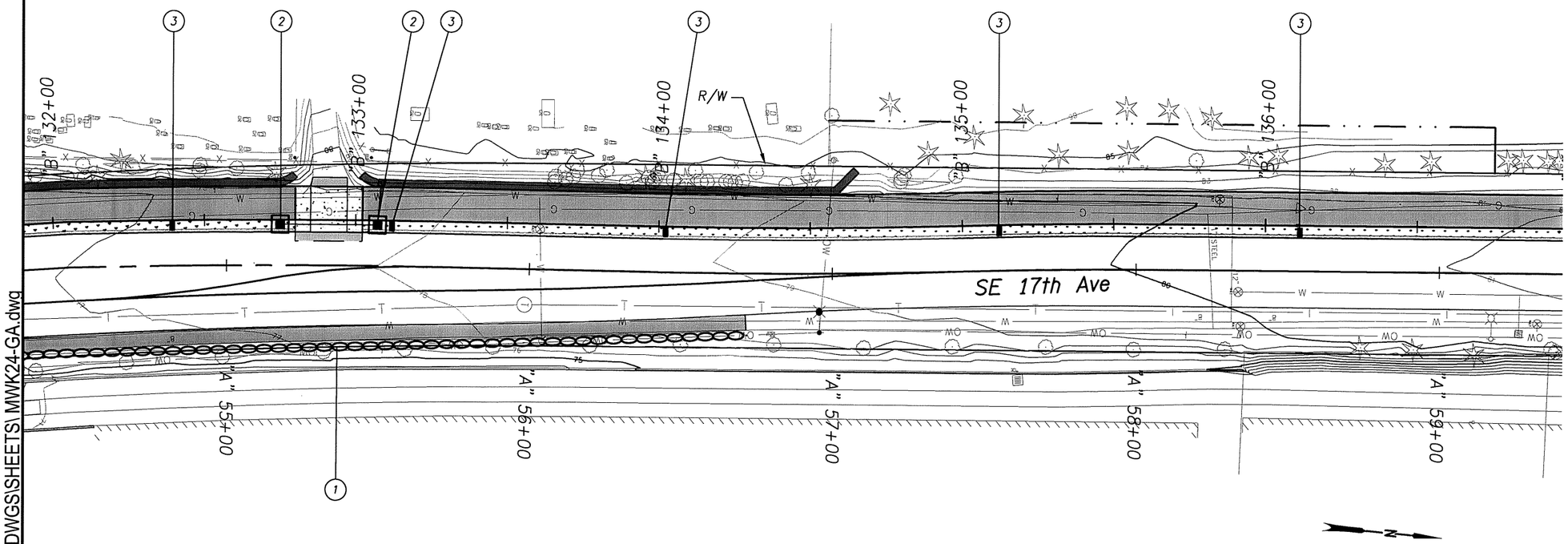

1. Inst. sediment barrier type 8
2. Inst. inlet protection type 3
3. Inst. compost filter sock check dam type 6

REGISTERED
672
Scott W. Banker
OREGON
06/19/08
LANDSCAPE ARCHITECT

OREGON DEPARTMENT OF TRANSPORTATION

Harper Houf Peterson Righellis Inc.
ENGINEERS • PLANNERS • LANDSCAPE ARCHITECTS • SURVEYORS
205 SE Spokane Street, Suite 200 Portland, OR 97202 phone: 503.221.1131 www.hhpr.com fax: 503.221.1171

17TH AVE TRAIL: SE OCHOCO - SE MCLOUGHLIN
CITY OF MILWAUKIE
CLACKAMAS COUNTY

REVIEWED BY AJI
DESIGNED BY SWB
DRAFTED BY BDJ

EROSION CONTROL

SHEET NO. GA-11

P:\MWK (City of Milwaukie)\MWK-24 (17TH Ave Trail)\MWK24-DWGS\SHEETS\ MWK24-GA.dwg

49V-026

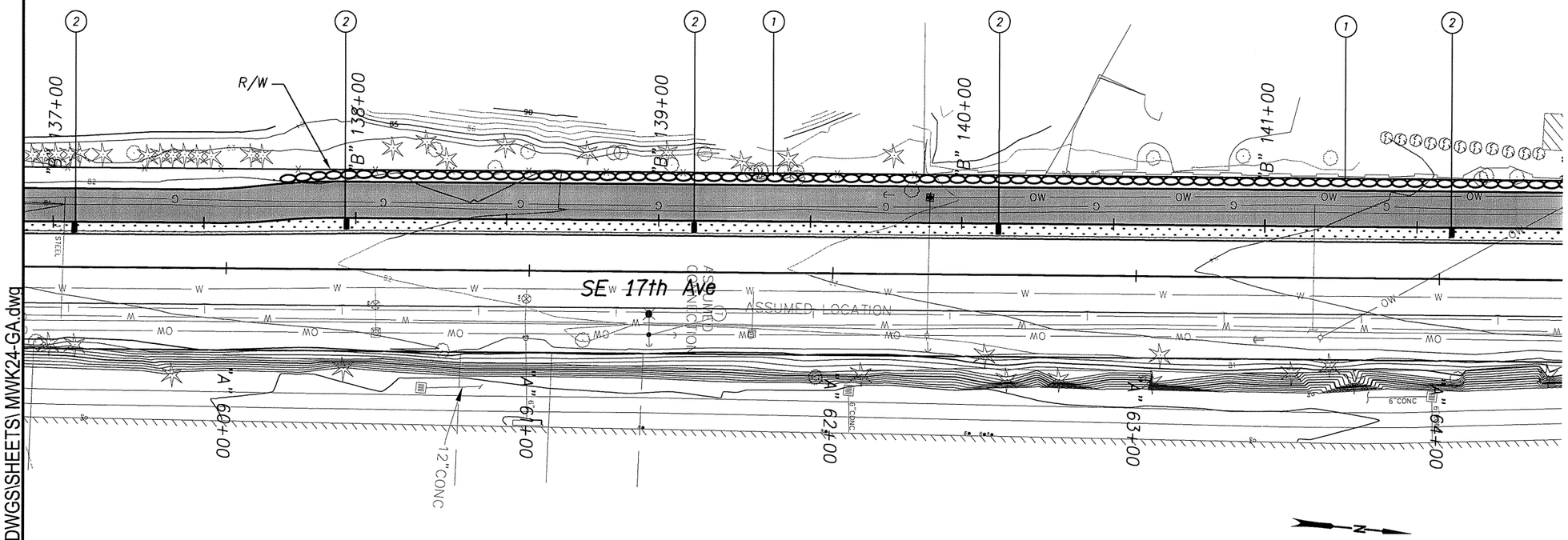

(1) Inst. sediment barrier type 8

(2) Inst. compost filter sock check dam type 6

REGISTERED
672
Scott W. Banker
OREGON
06/19/08
LANDSCAPE ARCHITECT

OREGON DEPARTMENT OF TRANSPORTATION

Harper Houf Peterson Righellis Inc.
ENGINEERS • PLANNERS • LANDSCAPE ARCHITECTS • SURVEYORS
205 SE Spokane Street, Suite 200 Portland, OR 97202 phone: 503.221.1131 www.hhpr.com fax: 503.221.1171

17TH AVE TRAIL: SE OCHOCO - SE MCLOUGHLIN
CITY OF MILWAUKIE
CLACKAMAS COUNTY

REVIEWED BY AJI
DESIGNED BY SWB
DRAFTED BY BDJ

EROSION CONTROL

SHEET NO. GA-12

P:\MWK (City of Milwaukie)\MWK-24 (17TH Ave Trail)\MWK24-DWGS\SHEETS\MWK24-GA.dwg

49V-026

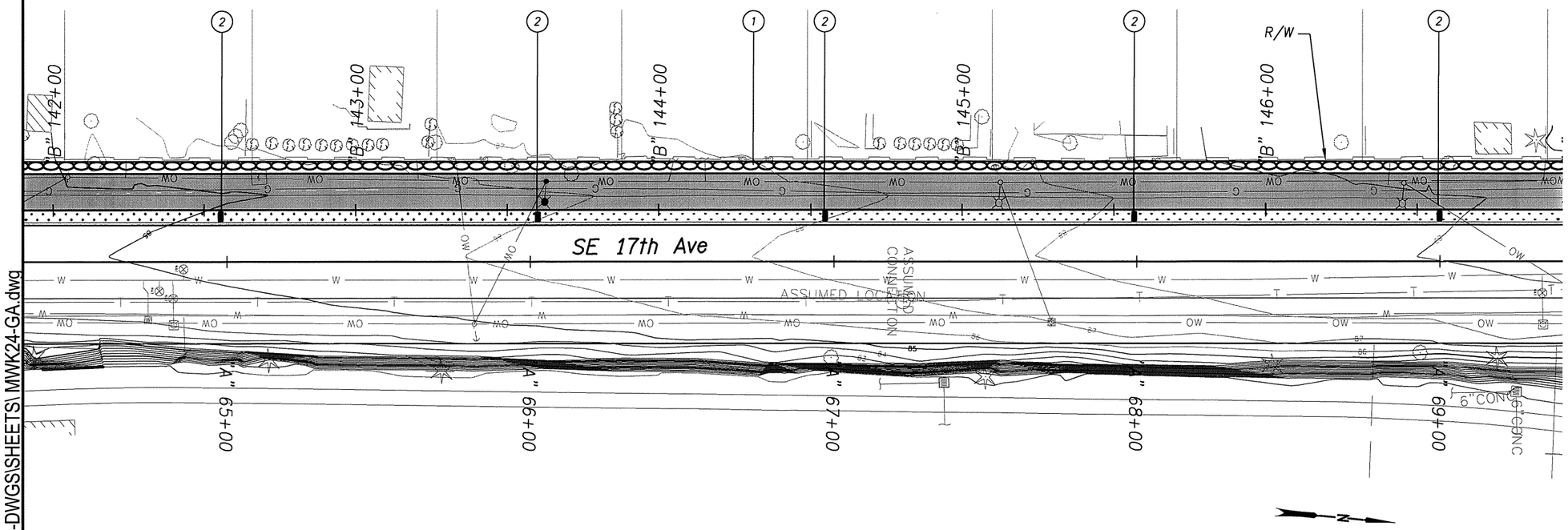

(1) Inst. sediment barrier type 8

(2) Inst. compost filter sock check dam type 6

REGISTERED
672
Scott W. Banker
OREGON
06/19/08
LANDSCAPE ARCHITECT

OREGON DEPARTMENT OF TRANSPORTATION

Harper Houf Peterson Righellis Inc.
ENGINEERS • PLANNERS • LANDSCAPE ARCHITECTS • SURVEYORS
205 SE Spokane Street, Suite 200 Portland, OR 97202 phone: 503.221.1131 www.hhpr.com fax: 503.221.1171

17TH AVE TRAIL: SE OCHOCO - SE MCLOUGHLIN
CITY OF MILWAUKIE
CLACKAMAS COUNTY

REVIEWED BY AJI
DESIGNED BY SWB
DRAFTED BY BDJ

EROSION CONTROL

SHEET NO. GA-13

P:\MWK (City of Milwaukie)\MWK-24 (17TH Ave Trail)\MWK24-DWGS\SHEETS\ MWK24-GA.dwg

49V-026

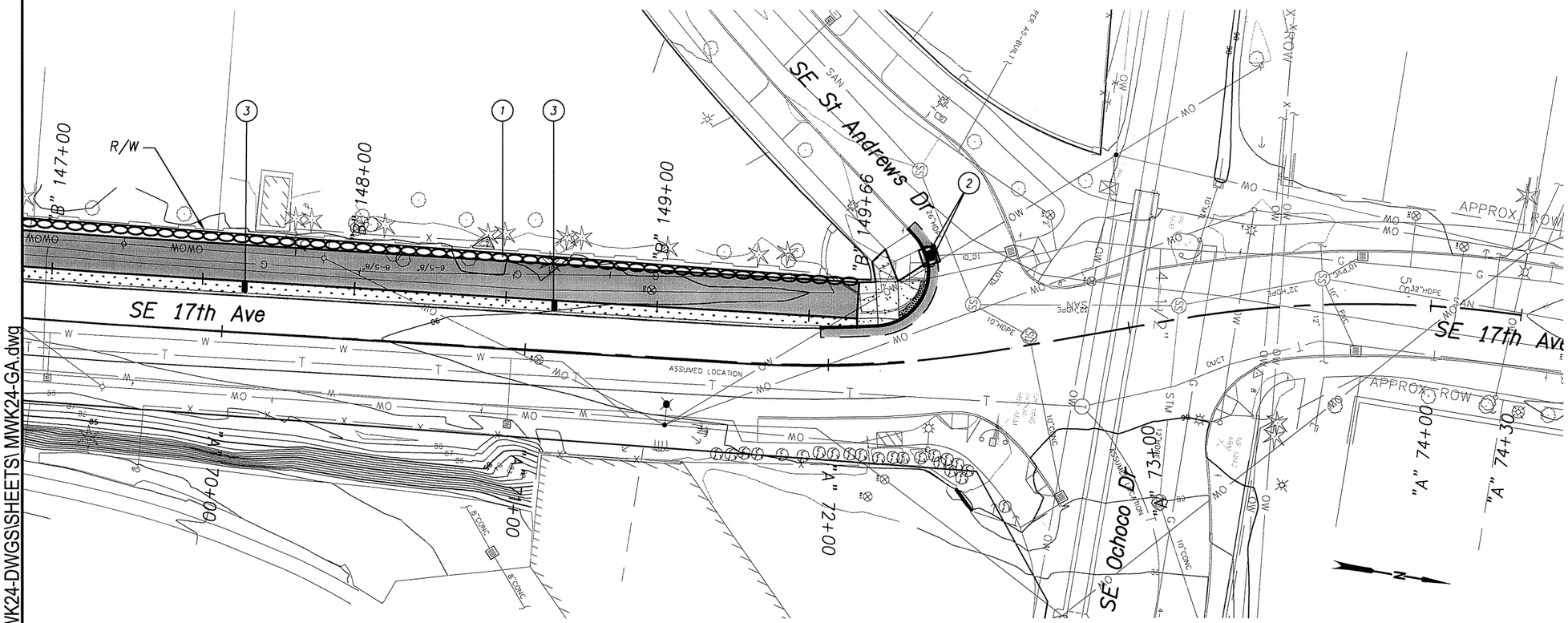

1. Inst. sediment barrier type 8
2. Inst. inlet protection type 3
3. Inst. compost filter sock check dam type 6

REGISTERED
672
Scott W. Banker
OREGON
06/19/08
LANDSCAPE ARCHITECT

OREGON DEPARTMENT OF TRANSPORTATION

Harper Houf Peterson Righellis Inc.
ENGINEERS • PLANNERS • LANDSCAPE ARCHITECTS • SURVEYORS
205 SE Spokane Street, Suite 200 Portland, OR 97202 phone: 503.221.1131 www.hhpr.com fax: 503.221.1171

17TH AVE TRAIL: SE OCHOCO - SE MCLOUGHLIN
CITY OF MILWAUKIE
CLACKAMAS COUNTY

REVIEWED BY AJI
DESIGNED BY SWB
DRAFTED BY BDJ

EROSION CONTROL

SHEET NO. GA-14

P:\MWK (City of Milwaukie)\MWK-24 (17TH Ave Trail)\MWK24-DWGS\SHEETS\MWK24-GA.dwg

49V-026

Sec. 35, T. 1S, R. 1E, W.M.

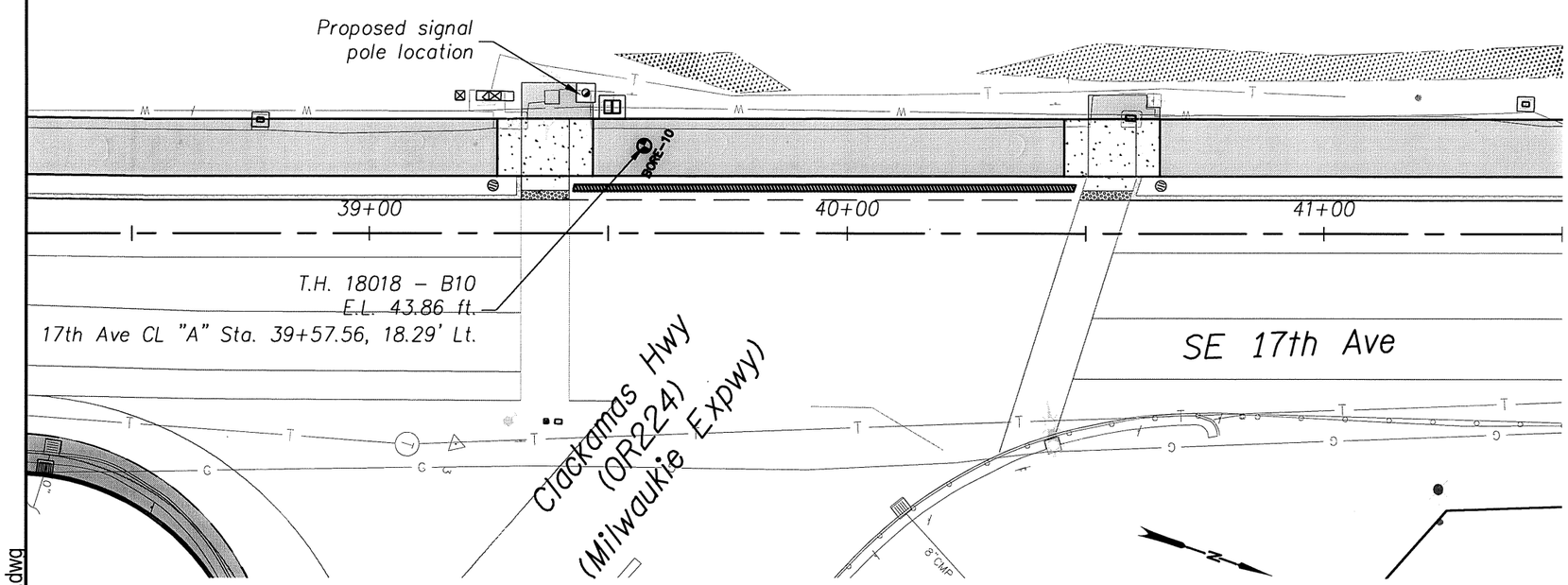

PLAN

Scale: 1" = 30'

LEGEND:

- Asphalt concrete
- Aggregate base
- Medium dense silty gravel – fill
- Soft to stiff silt
- Soft to medium stiff clay
- Very dense silty sand to silt with sand
- Very dense clayey sand to clay with sand

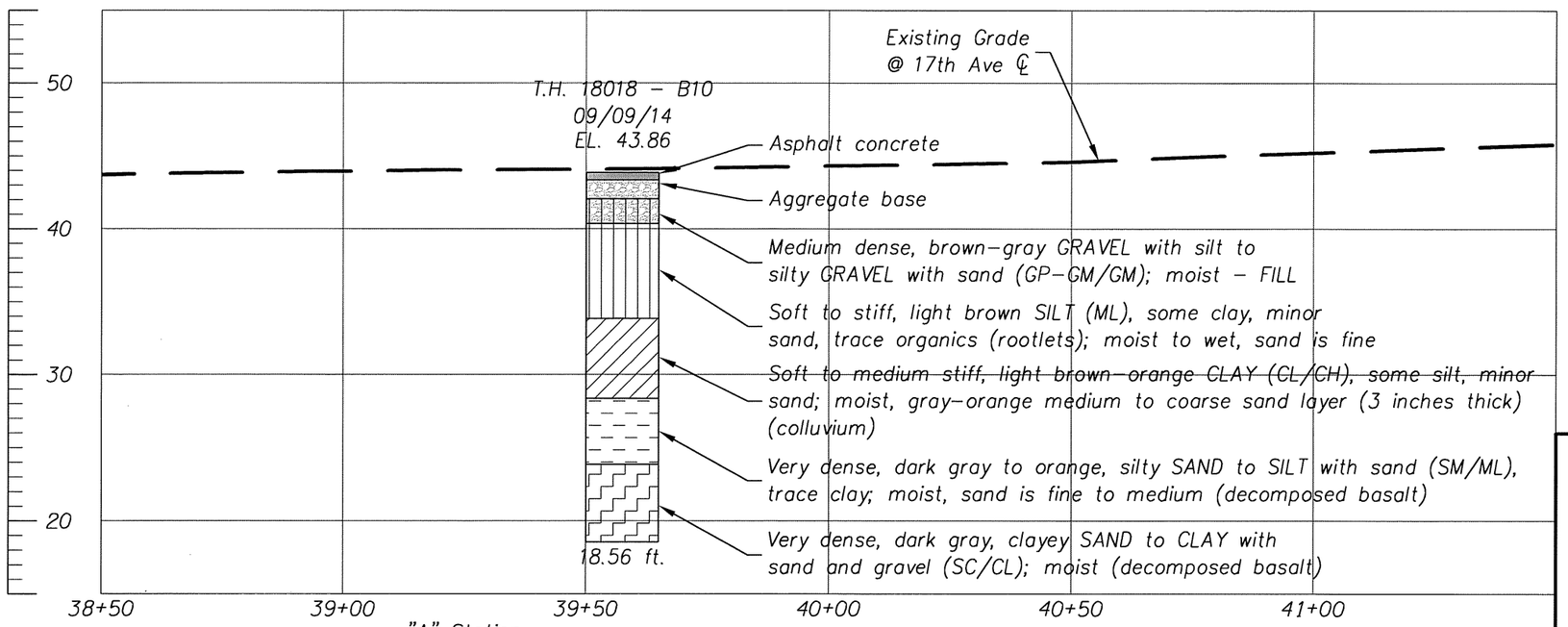

PROFILE

Scale: Veritcal 1" = 10'
Horizontal 1" = 30'

REGISTERED PROFESSIONAL ENGINEER 15025 OREGON JULY 25, 1990 GEORGE P. SAUNDERS

EXPIRES: 6/30/16

OREGON DEPARTMENT OF TRANSPORTATION

GEODESIGN INC
15575 SW Sequoia Parkway - Suite 100
Portland OR 97224
Off 503.968.8787 Fax 503.968.3068

17TH AVE TRAIL: SE OCHOCO - SE MCLOUGHLIN
CITY OF MILWAUKIE
CLACKAMAS COUNTY

REVIEWED BY AJI
DESIGNED BY KJO
DRAFTED BY KJO

GEOTECHNICAL DATA

SHEET NO. GB

P:\MWK (City of Milwaukie)\MWK-24 (17TH Ave Trail)\MWK24-DWGS\SHEETS\ MWK24-GB.dwg

49V-026

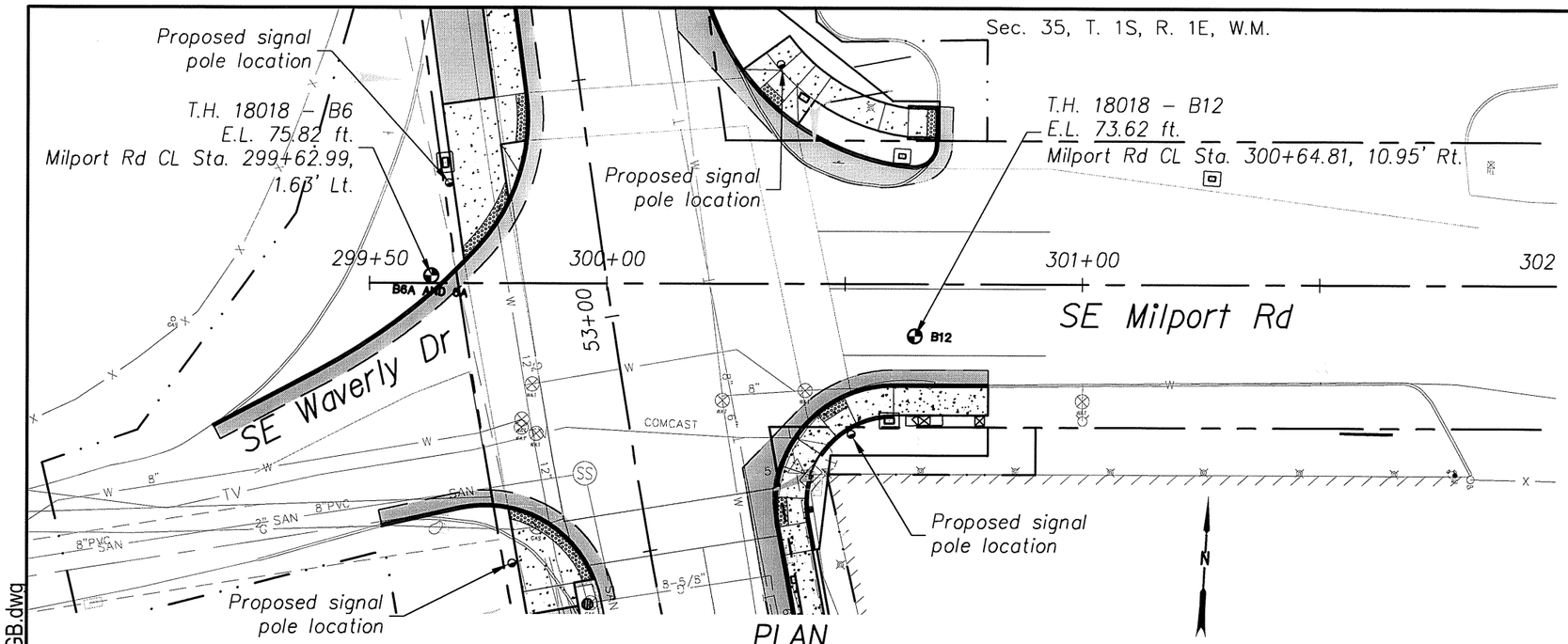

PLAN

Scale: 1" = 30'

LEGEND:

- Asphalt concrete
- Aggregate base
- Medium stiff silt
- Very dense gravel with silt, sand, cobbles and boulders
- Dense gravel with silt, sand, cobbles and boulders: well-graded
- Very dense, silty gravel with cobbles and boulders

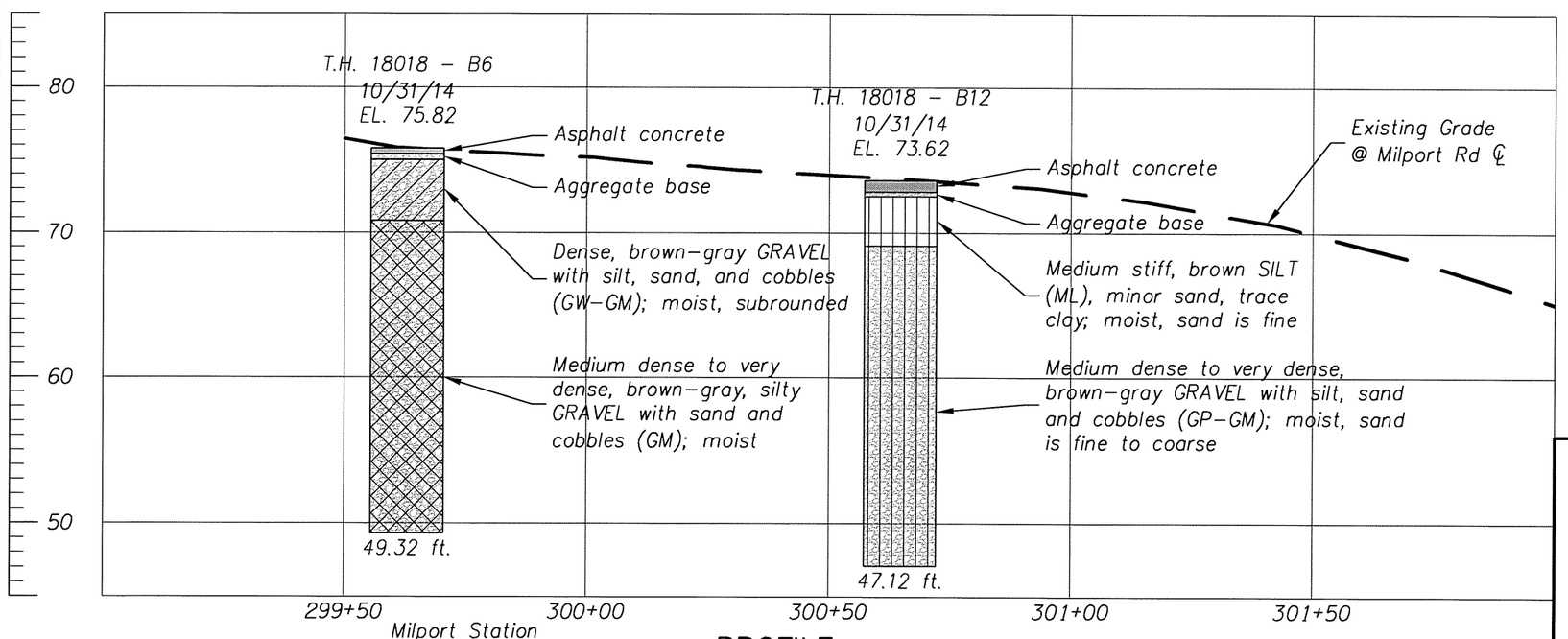

PROFILE

Scale: Veritcal 1" = 10'
Horizontal 1" = 30'

REGISTERED PROFESSIONAL ENGINEER 15025 OREGON JULY 25, 1990 GEORGE P. SAUNDERS

EXPIRES: 6/30/16

OREGON DEPARTMENT OF TRANSPORTATION

GEODESIGN INC
15575 SW Sequoia Parkway - Suite 100
Portland OR 97224
Off 503.968.8787 Fax 503.968.3068

17TH AVE TRAIL: SE OCHOCO - SE MCLOUGHLIN
CITY OF MILWAUKIE
CLACKAMAS COUNTY

REVIEWED BY AJI
DESIGNED BY KJO
DRAFTED BY KJO

GEOTECHNICAL DATA

SHEET NO. GB-2

P:\MWK (City of Milwaukie)\MWK-24 (17TH Ave Trail)\MWK24-DWGS\SHEETS\ MWK24-GB.dwg

49V-026

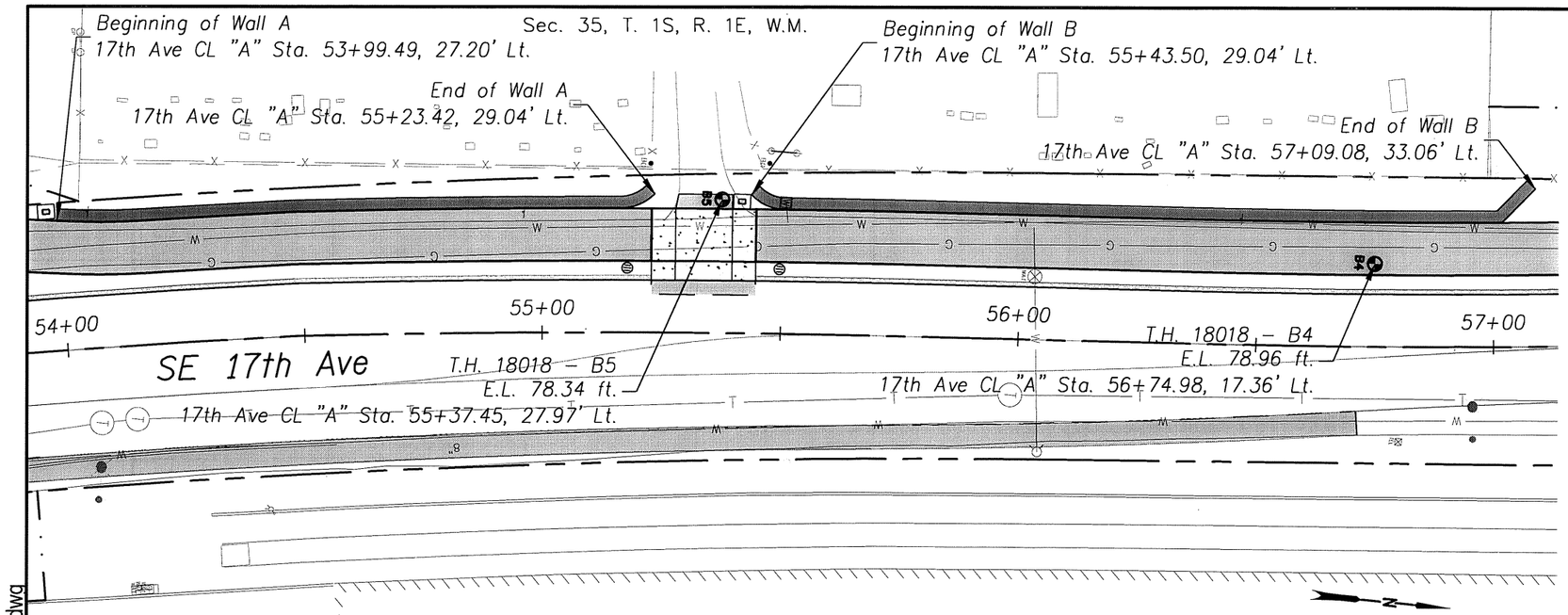

PLAN

Scale: 1" = 30'

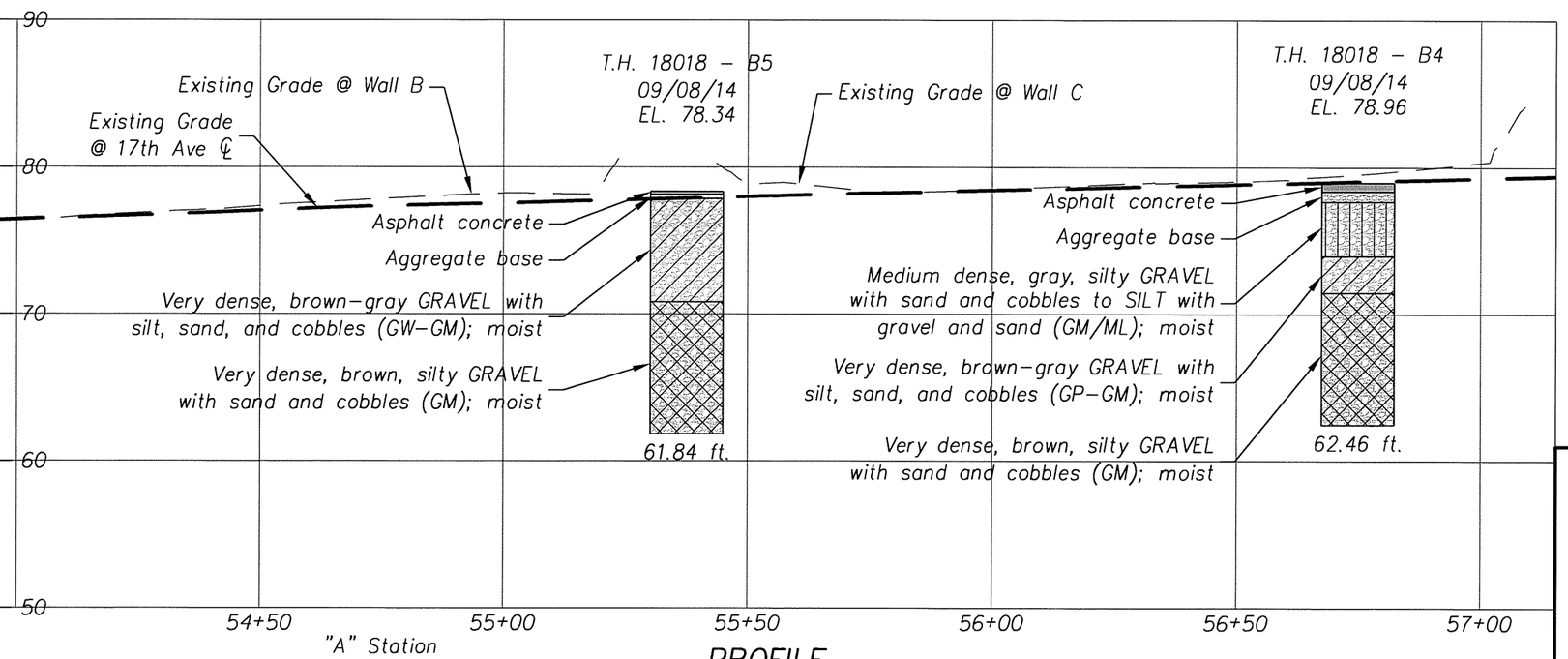

PROFILE

Scale: Veritcal 1" = 10'
Horizontal 1" = 30'

LEGEND:

- Asphalt concrete
- Aggregate base
- Medium dense silty gravel with sand and cobbles
- Very dense gravel with silt, sand, cobbles and boulders: well-graded
- Very dense, silty gravel with sand, cobbles, and boulders

REGISTERED PROFESSIONAL ENGINEER 15025 OREGON JULY 25, 1990 GEORGE P. SAUNDERS

EXPIRES: 6/30/16

OREGON DEPARTMENT OF TRANSPORTATION

GEODESIGN INC
15575 SW Sequoia Parkway - Suite 100
Portland OR 97224
Off 503.968.8787 Fax 503.968.3068

17TH AVE TRAIL: SE OCHOCO - SE MCLOUGHLIN
CITY OF MILWAUKIE
CLACKAMAS COUNTY

REVIEWED BY AJI
DESIGNED BY KJO
DRAFTED BY KJO

GEOTECHNICAL DATA

SHEET NO. GB-3

P:\MWK (City of Milwaukie)\MWK-24 (17TH Ave Trail)\MWK24-DWGS\SHEETS\ MWK24-GB.dwg

49V-026

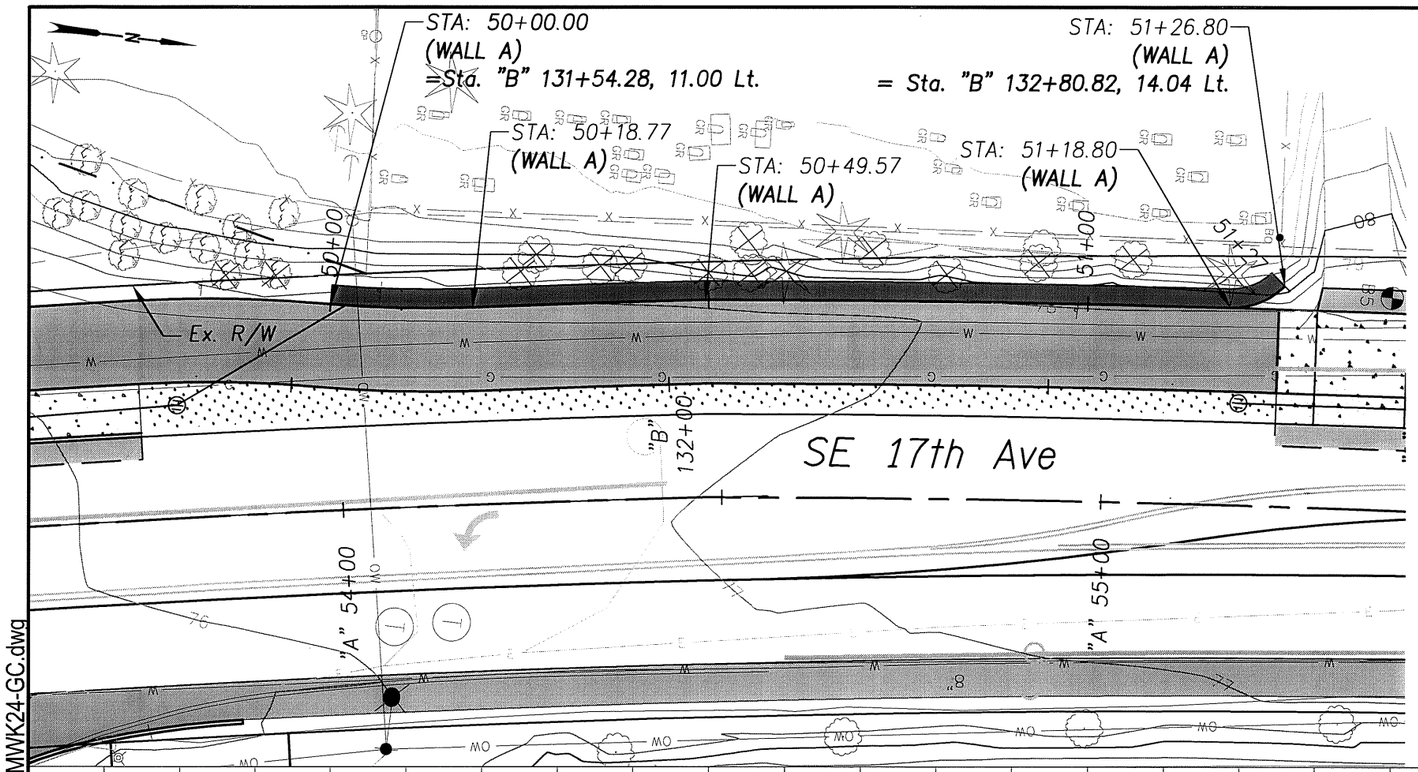

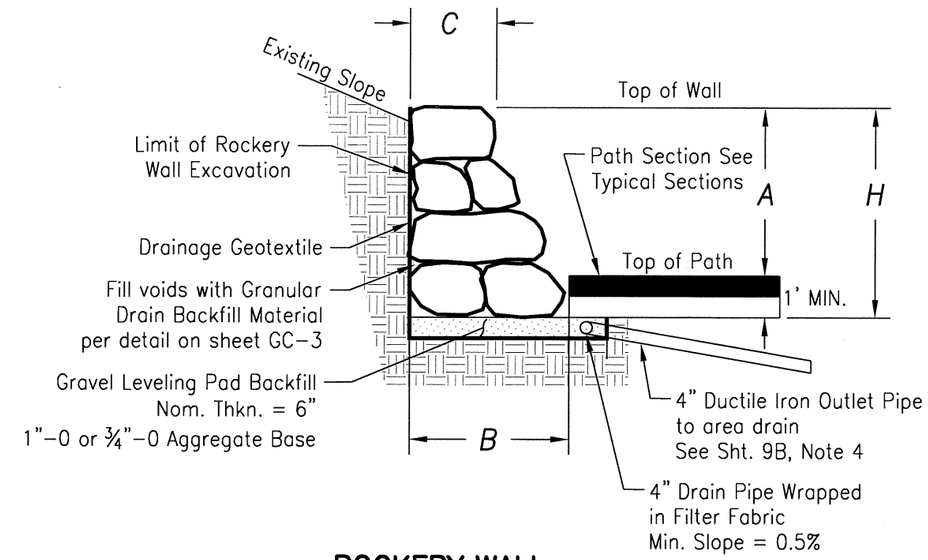

ROCKERY WALL

N.T.S.

DIMENSIONS TABLE

A (ft)	B (ft)	C (ft)	Batter (V):(H)
3.5	3	2.75	18:1
3	2.5	2.25	16:1
2	1.75	1.5	12:1

NOTES:
1) All Dimensions are Minimum
2) Rocks shall be no smaller than 500 lbs.

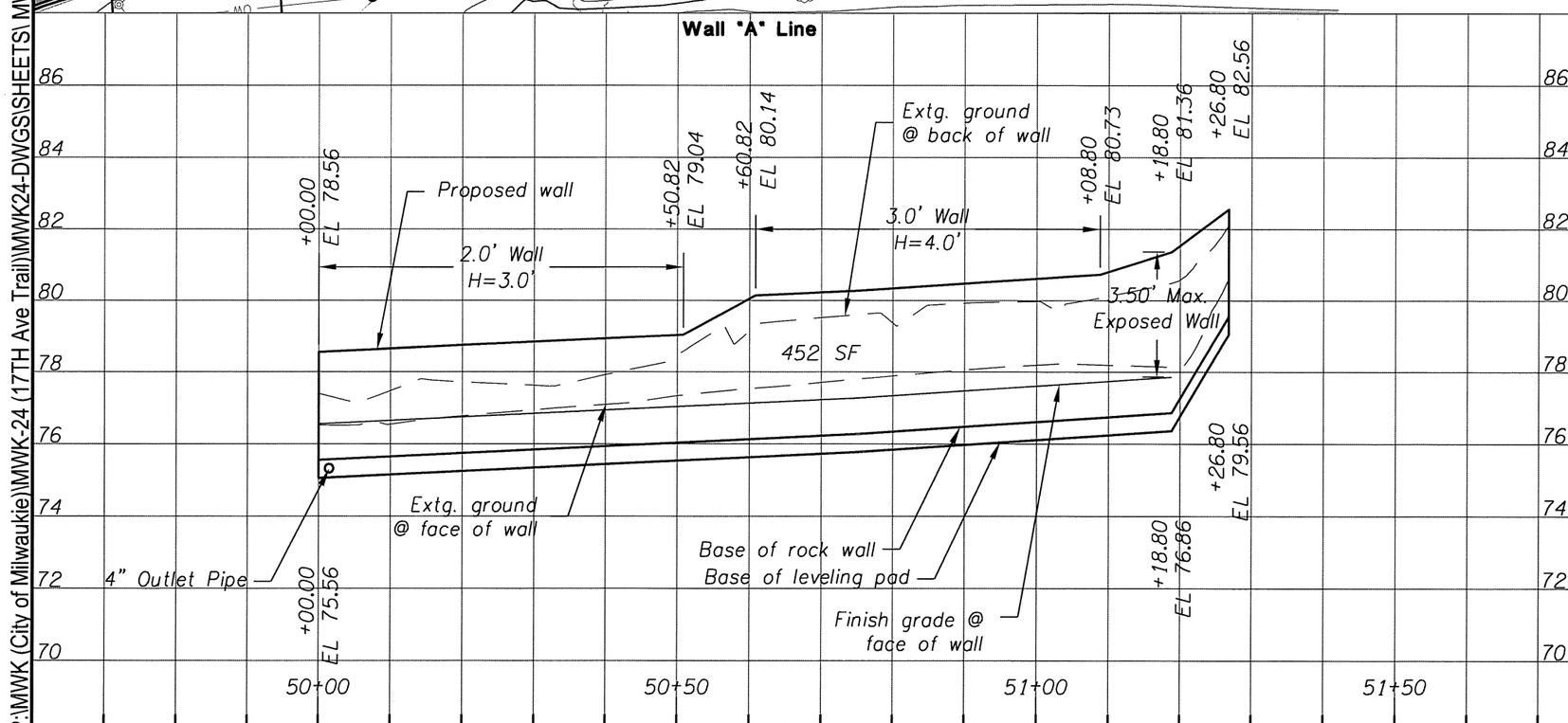

P:\MWK (City of Milwaukie)\MWK-24 (17TH Ave Trail)\MWK24-DWGS\SHEETS\ MWK24-GC.dwg

REGISTERED PROFESSIONAL ENGINEER 16,263 OREGON DEC. 1, 1992 DANIEL S. HOUF

EXPIRES: 06/30/2017

OREGON DEPARTMENT OF TRANSPORTATION

Harper Houf Peterson Righellis Inc.
ENGINEERS • PLANNERS • LANDSCAPE ARCHITECTS • SURVEYORS
205 SE Spokane Street, Suite 200 Portland, OR 97202 phone: 503.221.1131 www.hhpr.com fax: 503.221.1171

17TH AVE TRAIL: SE OCHOCO - SE MCLOUGHLIN
CITY OF MILWAUKIE
CLACKAMAS COUNTY

REVIEWED BY AJI
DESIGNED BY KJO
DRAFTED BY KJO

RETAINING WALLS

SHEET NO. GC

49V-026

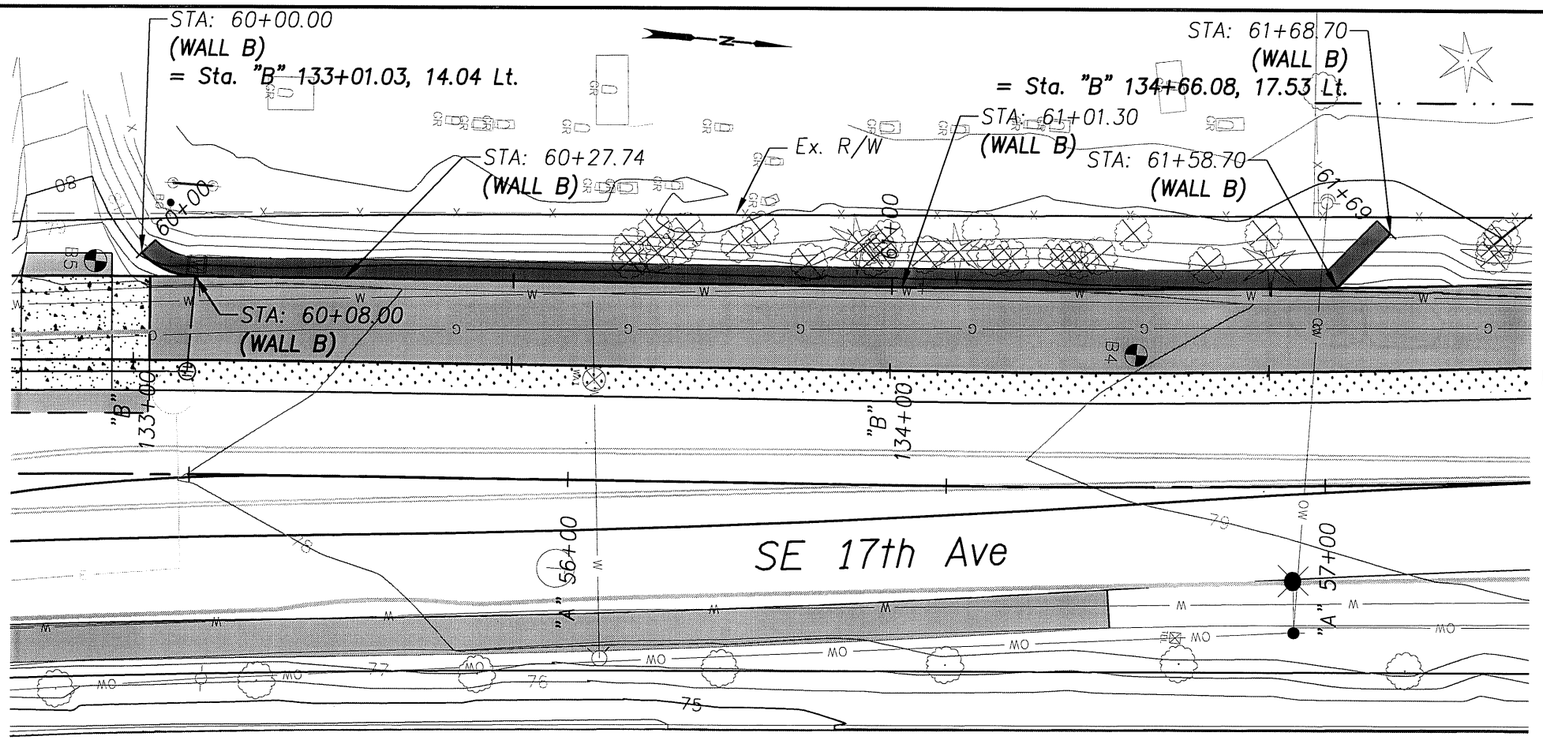

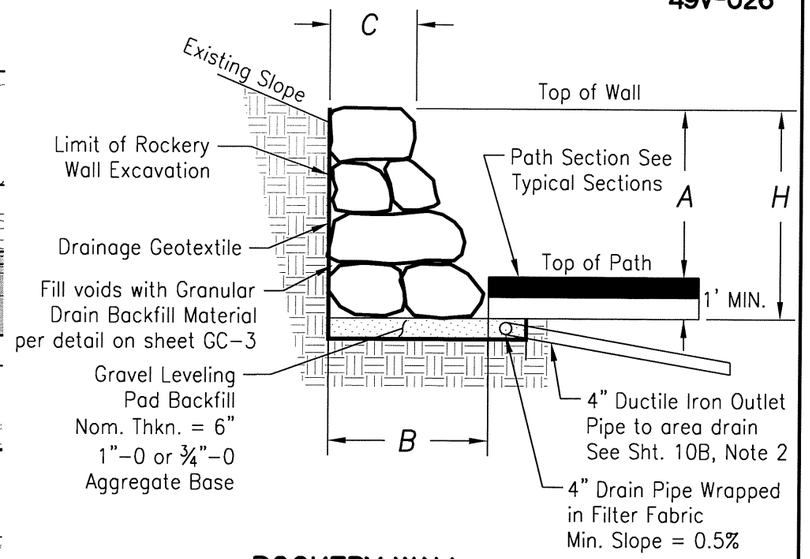

ROCKERY WALL

N.T.S.

DIMENSIONS TABLE

A (ft)	B (ft)	C (ft)	Batter (V):(H)
3.5	3	2.75	18:1
3	2.5	2.25	16:1
2	1.75	1.5	12:1

NOTES:
1) All Dimensions are Minimum
2) Rocks shall be no smaller than 500 lbs.

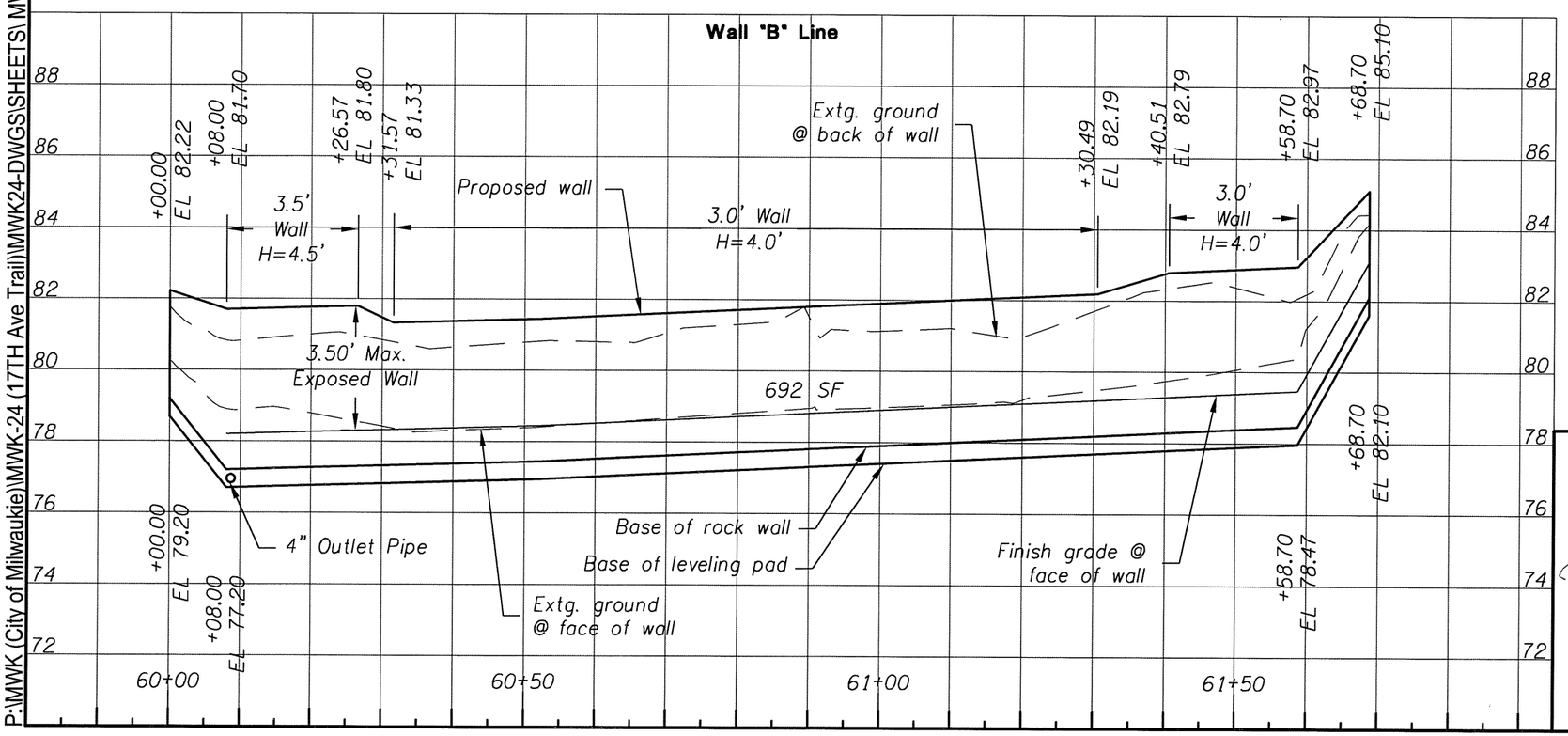

REGISTERED PROFESSIONAL ENGINEER 16,263 OREGON DEC. 1, 1992 DANIEL S. HOUF

EXPIRES: 06/30/2017

OREGON DEPARTMENT OF TRANSPORTATION

Harper Houf Peterson Righellis Inc.
ENGINEERS • PLANNERS • LANDSCAPE ARCHITECTS • SURVEYORS
205 SE Spokane Street, Suite 200 Portland, OR 97202 phone: 503.221.1131 www.hhpr.com fax: 503.221.1171

17TH AVE TRAIL: SE OCHOCO - SE MCLOUGHLIN
CITY OF MILWAUKIE
CLACKAMAS COUNTY

REVIEWED BY AJI
DESIGNED BY KJO
DRAFTED BY KJO

RETAINING WALLS

SHEET NO. GC-2

P:\MWK (City of Milwaukie)\MWK-24 (17TH Ave Trail)\MWK24-DWGS\SHEETS\ MWK24-GC.dwg

49V-026

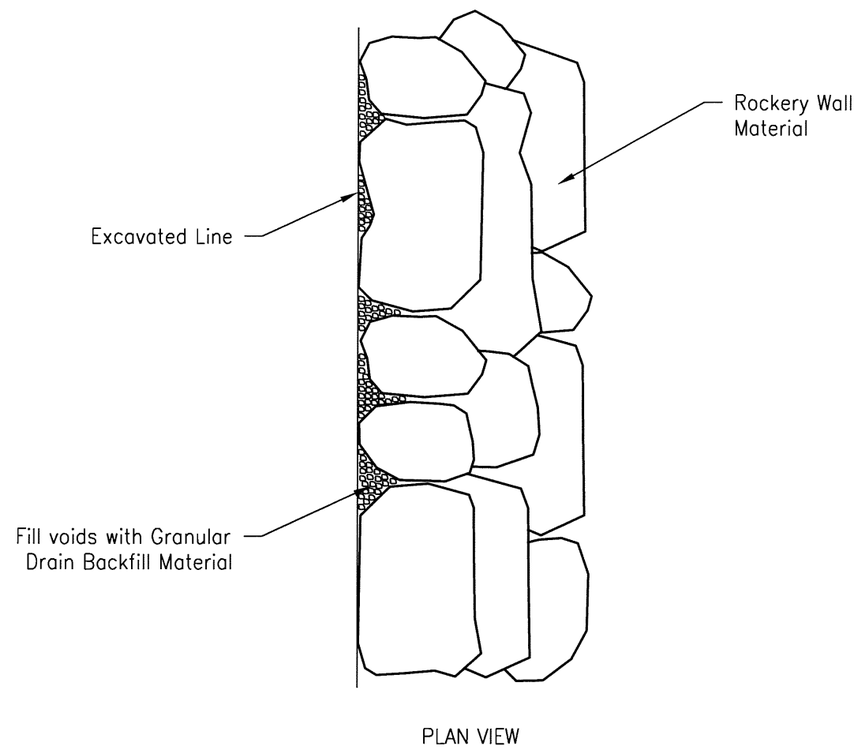

ROCKERY WALL BACKFILL

N.T.S.

REGISTERED PROFESSIONAL ENGINEER 16,263 OREGON DEC. 1, 1992 DANIEL S. HOUF

EXPIRES: 06/30/2017

OREGON DEPARTMENT OF TRANSPORTATION

Harper Houf Peterson Righellis Inc.
ENGINEERS • PLANNERS • LANDSCAPE ARCHITECTS • SURVEYORS
205 SE Spokane Street, Suite 200 Portland, OR 97202 phone: 503.221.1131 www.hhpr.com fax: 503.221.1171

17TH AVE TRAIL: SE OCHOCO - SE MCLOUGHLIN
CITY OF MILWAUKIE
CLACKAMAS COUNTY

REVIEWED BY AJI
DESIGNED BY KJO
DRAFTED BY KJO

RETAINING WALL DETAILS

SHEET NO. GC-3

P:\MWK (City of Milwaukie)\MWK-24 (17TH Ave Trail)\MWK24-DWGS\SHEETS\ MWK24-GC.dwg

49V-026

(1) *Excavated soil may contain contaminated media and will be disposed at a landfill per Special Provision 00294.*
Removal shown thus:

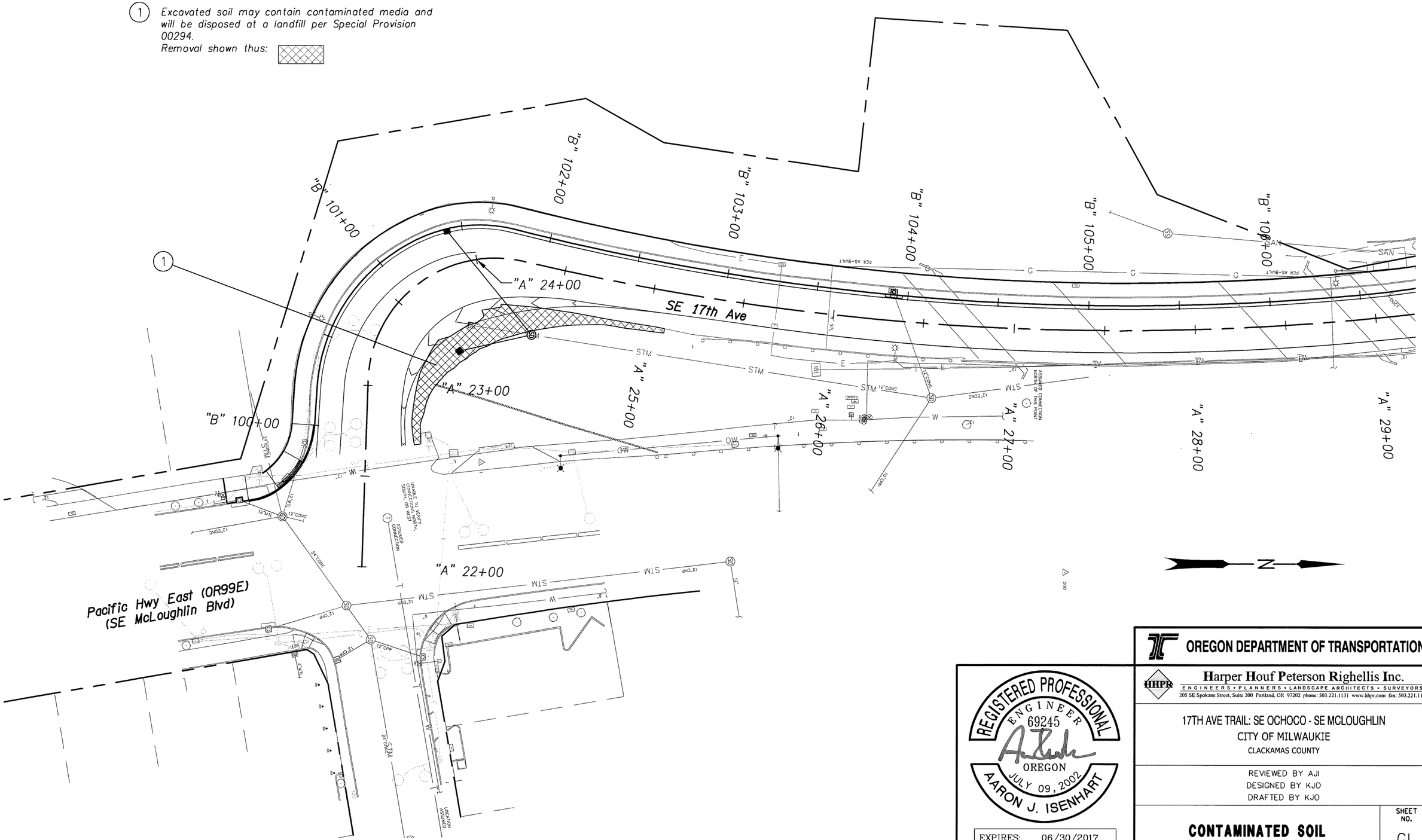

OREGON DEPARTMENT OF TRANSPORTATION

Harper Houf Peterson Righellis Inc.
ENGINEERS • PLANNERS • LANDSCAPE ARCHITECTS • SURVEYORS
205 SE Spokane Street, Suite 200 Portland, OR 97202 phone: 503.221.1131 www.hhpr.com fax: 503.221.1171

REGISTERED PROFESSIONAL ENGINEER 69245 OREGON JULY 09, 2002 AARON J. ISENHART

EXPIRES: 06/30/2017

17TH AVE TRAIL: SE OCHOCO - SE MCLOUGHLIN
CITY OF MILWAUKIE
CLACKAMAS COUNTY

REVIEWED BY AJI
DESIGNED BY KJO
DRAFTED BY KJO

CONTAMINATED SOIL

SHEET NO. GL

P:\MWK (City of Milwaukie)\MWK-24 (17TH Ave Trail)\MWK24-DWGS\SHEETS\ MWK24-GL.dwg

49V-026

P:\MWK (City of Milwaukie)\MWK-24 (17TH Ave Trail)\MWK24-DWGS\SHEETS\ MWK24-GL.dwg

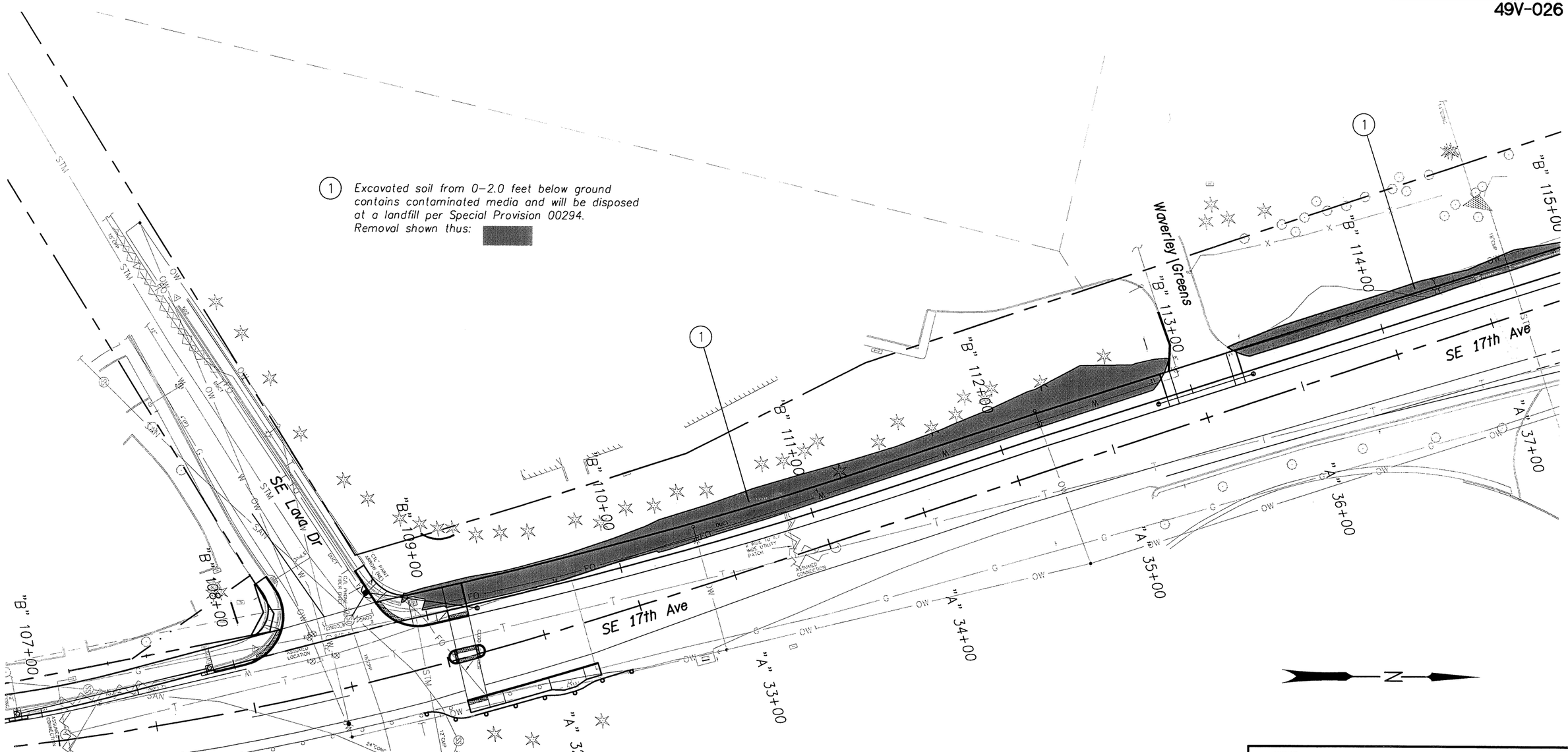

REGISTERED PROFESSIONAL ENGINEER 69245 OREGON JULY 09, 2002 AARON J. ISENHART

EXPIRES: 06/30/2017

OREGON DEPARTMENT OF TRANSPORTATION

Harper Houf Peterson Righellis Inc.
ENGINEERS • PLANNERS • LANDSCAPE ARCHITECTS • SURVEYORS
205 SE Spokane Street, Suite 200 Portland, OR 97202 phone: 503.221.1131 www.hhpr.com fax: 503.221.1171

17TH AVE TRAIL: SE OCHOCO - SE MCLOUGHLIN
CITY OF MILWAUKIE
CLACKAMAS COUNTY

REVIEWED BY AJI
DESIGNED BY KJO
DRAFTED BY KJO

CONTAMINATED SOIL

SHEET NO. GL-2

49V-026

(1) *Excavated soil from 0–2.0 feet below ground contains contaminated media and will be disposed at a landfill per Special Provision 00294. Removal shown thus:*

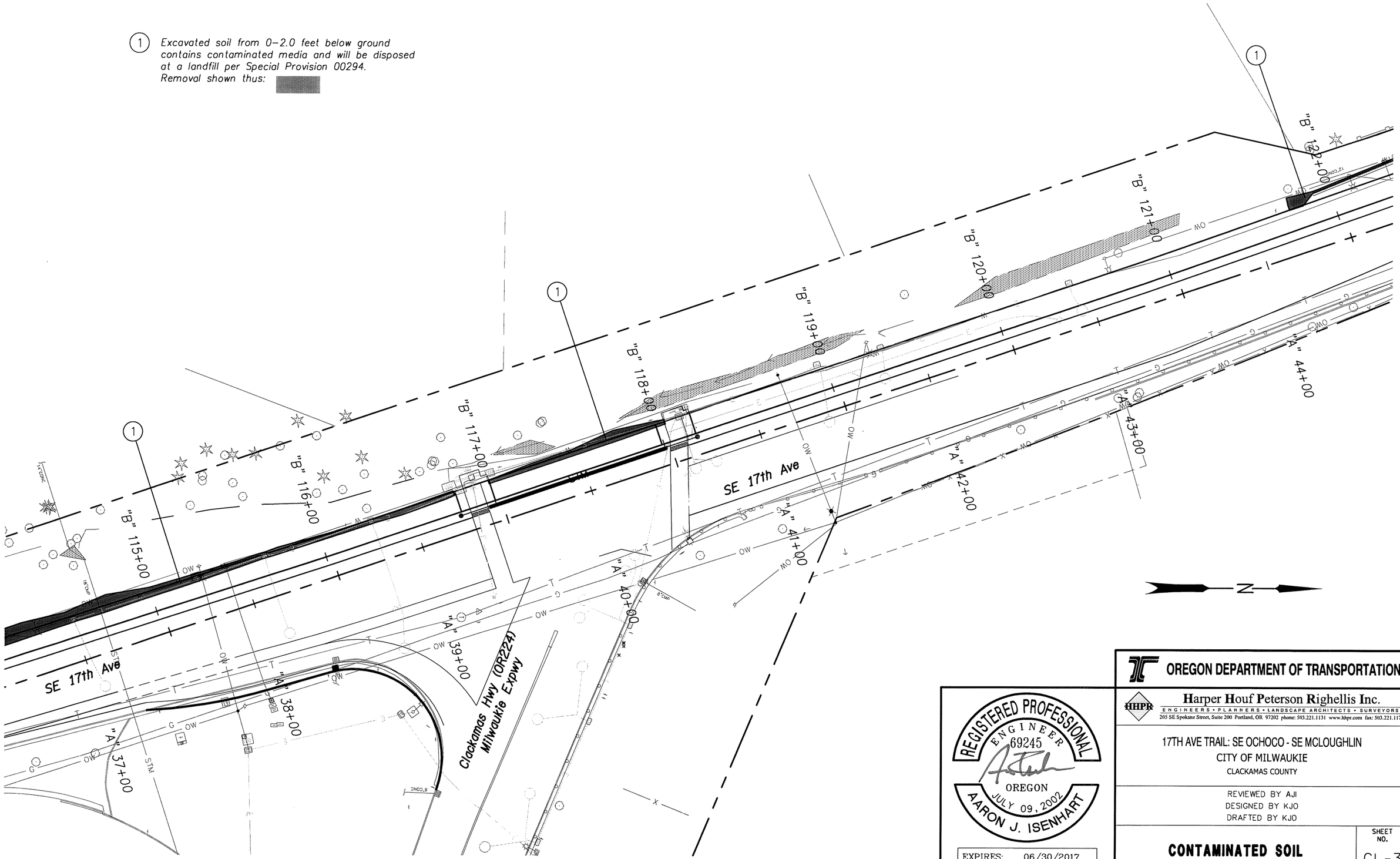

REGISTERED PROFESSIONAL ENGINEER 69245 OREGON JULY 09, 2002 AARON J. ISENHART

EXPIRES: 06/30/2017

OREGON DEPARTMENT OF TRANSPORTATION

Harper Houf Peterson Righellis Inc.
ENGINEERS • PLANNERS • LANDSCAPE ARCHITECTS • SURVEYORS
205 SE Spokane Street, Suite 200 Portland, OR 97202 phone: 503.221.1131 www.hhpr.com fax: 503.221.1171

17TH AVE TRAIL: SE OCHOCO - SE MCLOUGHLIN
CITY OF MILWAUKIE
CLACKAMAS COUNTY

REVIEWED BY AJI
DESIGNED BY KJO
DRAFTED BY KJO

CONTAMINATED SOIL

SHEET NO. GL-3

P:\MWK (City of Milwaukie)\MWK-24 (17TH Ave Trail)\MWK24-DWGS\SHEETS\MWK24-GL.dwg

49V-026

(1) *Excavated soil from 0–0.5 feet below ground contains contaminated media and will be disposed at a landfill per Special Provision 00294. Removal shown thus:*

(2) *Excavated soil from 0–2.0 feet below ground contains contaminated media and will be disposed at a landfill per Special Provision 00294. Removal shown thus:*

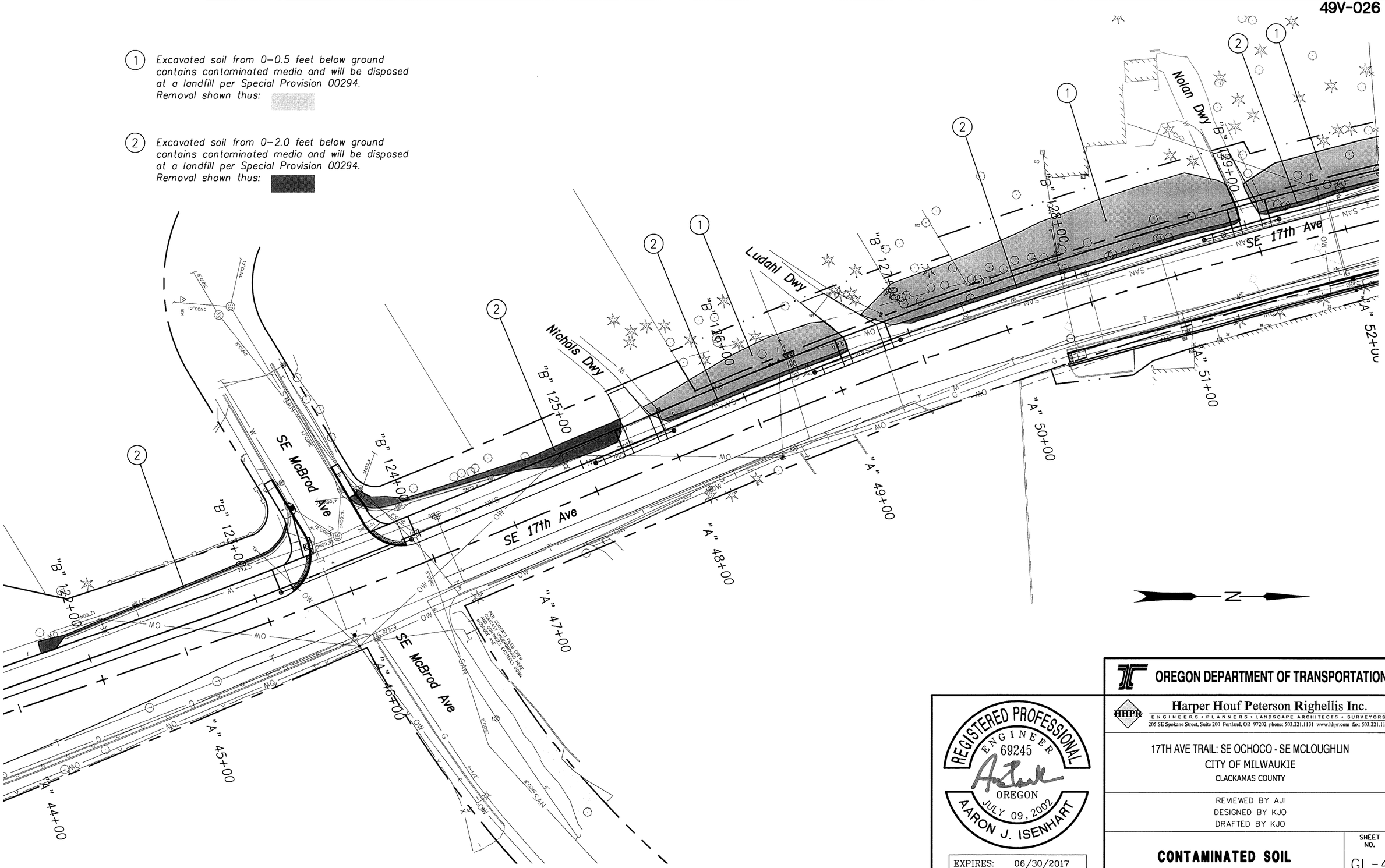

OREGON DEPARTMENT OF TRANSPORTATION

Harper Houf Peterson Righellis Inc.
ENGINEERS • PLANNERS • LANDSCAPE ARCHITECTS • SURVEYORS
205 SE Spokane Street, Suite 200 Portland, OR 97202 phone: 503.221.1131 www.hhpr.com fax: 503.221.1171

REGISTERED PROFESSIONAL ENGINEER 69245 OREGON JULY 09, 2002 AARON J. ISENHART

EXPIRES: 06/30/2017

17TH AVE TRAIL: SE OCHOCO - SE MCLOUGHLIN
CITY OF MILWAUKIE
CLACKAMAS COUNTY

REVIEWED BY AJI
DESIGNED BY KJO
DRAFTED BY KJO

CONTAMINATED SOIL

SHEET NO. GL-4

P:\MWK (City of Milwaukie)\MWK-24 (17TH Ave Trail)\MWK24-DWGS\SHEETS\ MWK24-GL.dwg

49V-026

(1) *Excavated soil from 0–0.5 feet below ground contains contaminated media and will be disposed at a landfill per Special Provision 00294. Removal shown thus:*

(2) *Excavated soil from 0–2.0 feet below ground contains contaminated media and will be disposed at a landfill per Special Provision 00294. Removal shown thus:*

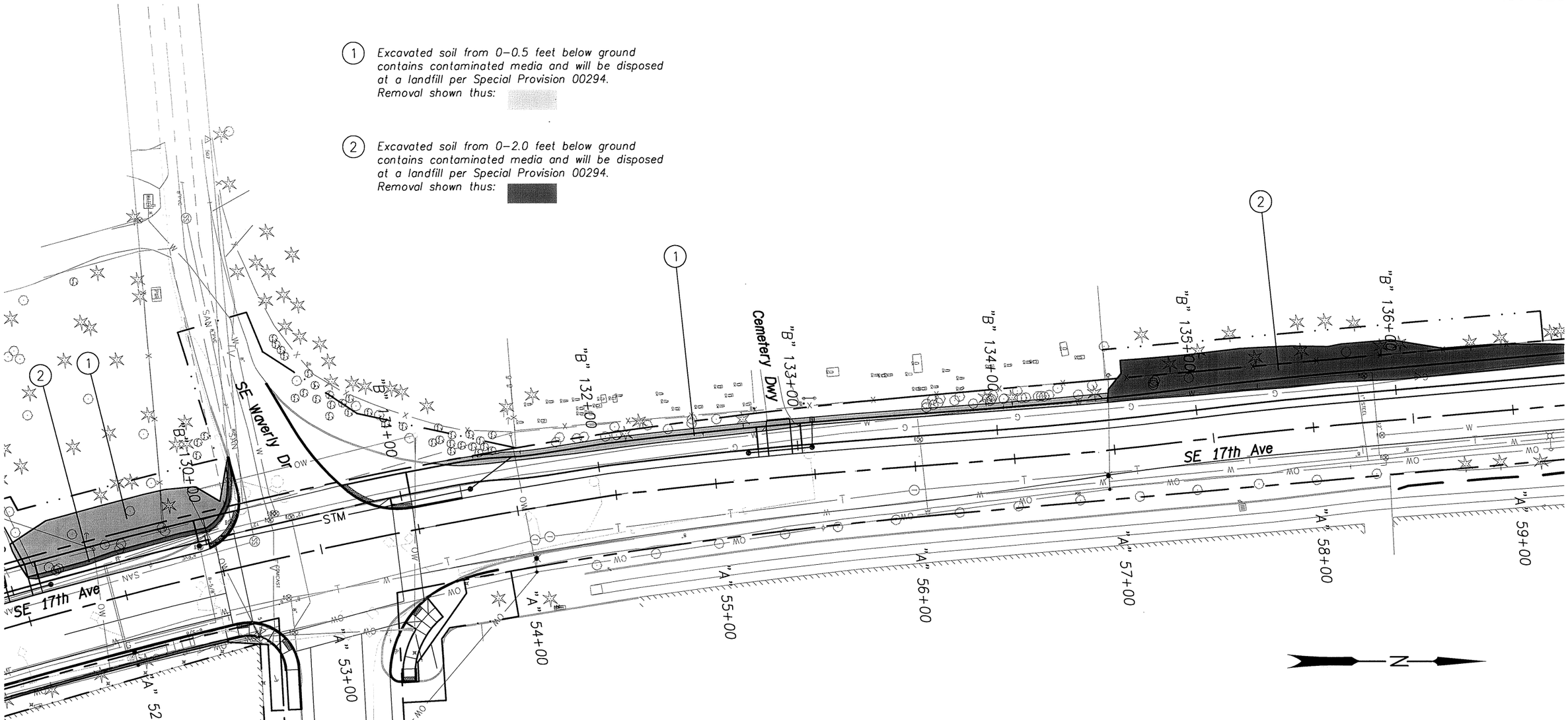

P:\MWK (City of Milwaukie)\MWK-24 (17TH Ave Trail)\MWK24-DWGS\SHEETS\ MWK24-GL.dwg

REGISTERED PROFESSIONAL ENGINEER 69245 OREGON JULY 09, 2002 AARON J. ISENHART

EXPIRES: 06/30/2017

OREGON DEPARTMENT OF TRANSPORTATION

Harper Houf Peterson Righellis Inc.
ENGINEERS • PLANNERS • LANDSCAPE ARCHITECTS • SURVEYORS
205 SE Spokane Street, Suite 200 Portland, OR 97202 phone: 503.221.1131 www.hhpr.com fax: 503.221.1171

17TH AVE TRAIL: SE OCHOCO - SE MCLOUGHLIN
CITY OF MILWAUKIE
CLACKAMAS COUNTY

REVIEWED BY AJI
DESIGNED BY KJO
DRAFTED BY KJO

CONTAMINATED SOIL

SHEET NO. GL-5

49V-026

(1) *Excavated soil from 0–2.0 feet below ground contains contaminated media and will be disposed at a landfill per Special Provision 00294. Removal shown thus:*

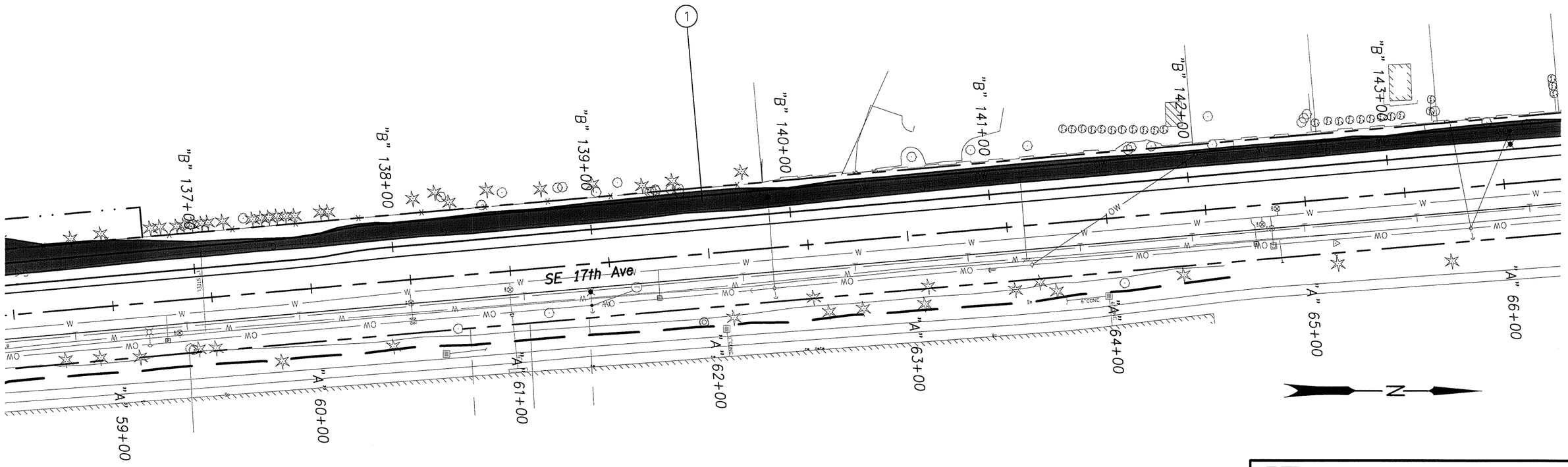

P:\MWK (City of Milwaukie)\MWK-24 (17TH Ave Trail)\MWK24-DWGS\SHEETS\ MWK24-GL.dwg

REGISTERED PROFESSIONAL ENGINEER 69245 OREGON JULY 09, 2002 AARON J. ISENHART

EXPIRES: 06/30/2017

OREGON DEPARTMENT OF TRANSPORTATION

Harper Houf Peterson Righellis Inc.
ENGINEERS • PLANNERS • LANDSCAPE ARCHITECTS • SURVEYORS
205 SE Spokane Street, Suite 200 Portland, OR 97202 phone: 503.221.1131 www.hhpr.com fax: 503.221.1171

17TH AVE TRAIL: SE OCHOCO - SE MCLOUGHLIN
CITY OF MILWAUKIE
CLACKAMAS COUNTY

REVIEWED BY AJI
DESIGNED BY KJO
DRAFTED BY KJO

CONTAMINATED SOIL

SHEET NO. GL-6

49V-026

(1) *Excavated soil from 0–2.0 feet below ground contains contaminated media and will be disposed at a landfill per Special Provision 00294. Removal shown thus:*

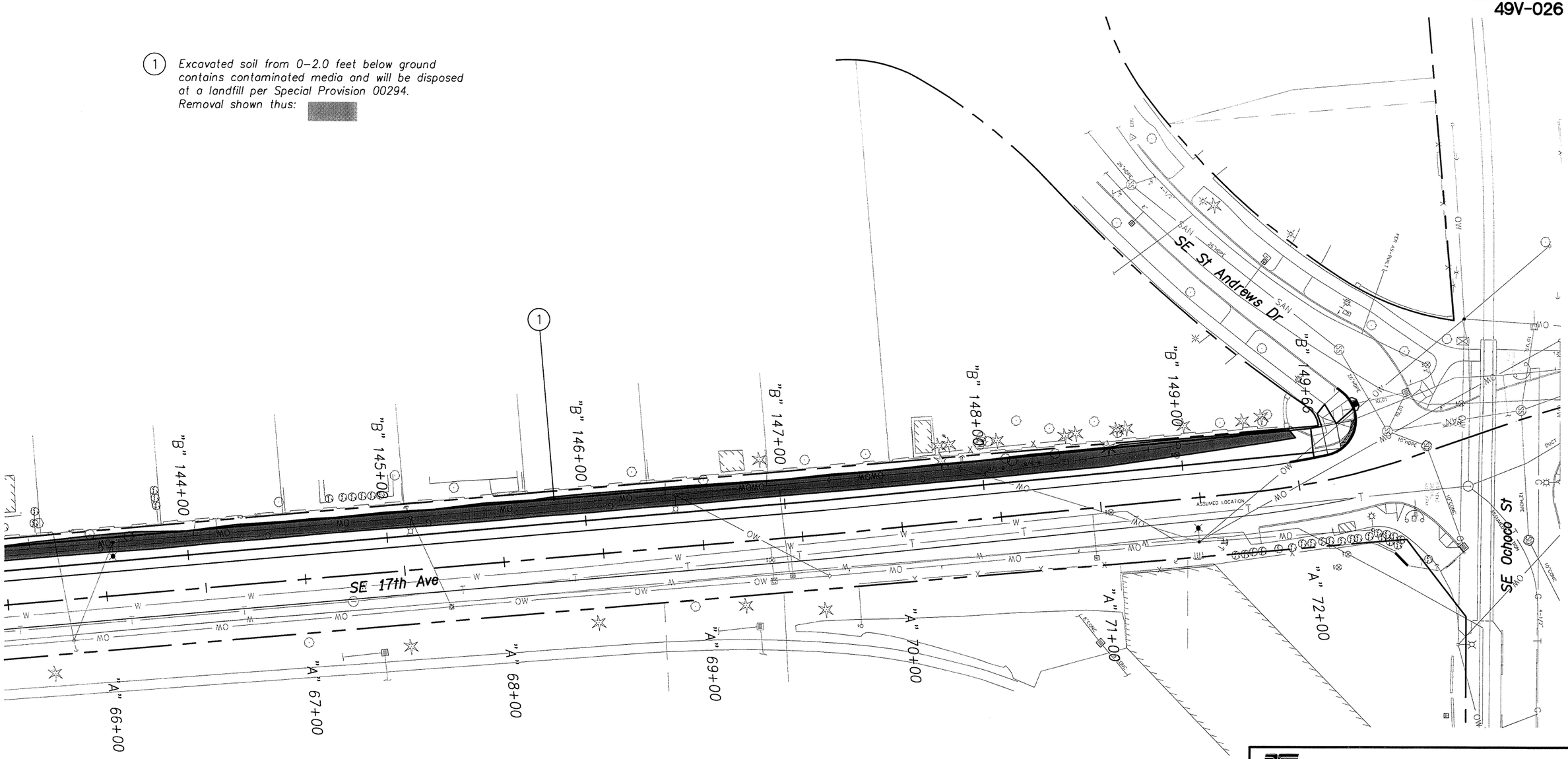

P:\MWK (City of Milwaukie)\MWK-24 (17TH Ave Trail)\MWK24-DWGS\SHEETS\ MWK24-GL.dwg

REGISTERED PROFESSIONAL ENGINEER 69245 OREGON JULY 09, 2002 AARON J. ISENHART

EXPIRES: 06/30/2017

OREGON DEPARTMENT OF TRANSPORTATION

Harper Houf Peterson Righellis Inc.
ENGINEERS • PLANNERS • LANDSCAPE ARCHITECTS • SURVEYORS
205 SE Spokane Street, Suite 200 Portland, OR 97202 phone: 503.221.1131 www.hhpr.com fax: 503.221.1171

17TH AVE TRAIL: SE OCHOCO - SE MCLOUGHLIN
CITY OF MILWAUKIE
CLACKAMAS COUNTY

REVIEWED BY AJI
DESIGNED BY KJO
DRAFTED BY KJO

CONTAMINATED SOIL

SHEET NO. GL-7

49V-026

BID ITEM LOG

BID ITEM		CONIFER TREES 6' HEIGHT	GROUND COVER No. 1 Cont.		WETLAND PLANTS 10 C.I. Plugs		PERMANENT SEEDING	WATER QUALITY SEEDING	WATER QUALITY MIXTURE
DESCRIPTIONS		6' Height Thuja occidentalis 'Smaragd'	Cotoneaster dammeri 'Lowfast'	Spiraea aponica 'Lemon Princes'	10 C.I. Plugs Iris tenax	10 C.I. Plugs Juncus patens			
Units		Ea.		Ea.	Ea.	Ea.	Acre	Acre	C.Y.
Page									
GN-2							.030		16
GN-3							.008		4
GN-4					15	18	.104	.028	79
GN-5					27	30	.092	.045	86
GN-6					24	24	.059	.038	63
GN-7			49		18	33	.108	.035	93
GN-8		35	851	34	18	27	.064	.034	168
GN-9					30	30	.136	.036	102
GN-10					30	30	.043	.049	62
GN-11					30	30	.038	.050	61
GN-12					15	15	.020	.025	31
Total		35	900	34	207	237	.702	.340	765

PLANT LIST

BOTANICAL NAME	COMMON NAME	GRADE	CLASS	PLANT TYPE	SPACING	TOTAL
CONIFER TREES, 6'HEIGHT						
Thuja occidnetalis 'Smaragd'	Arborvitae	3.2.6		No. 1 Cont.	4' O.C.	35
GROUNDCOVER PLANTS, No.1 Cont.						
Cotoneaster dammeri 'Lowfast'	Lowfast Cotoneaster	4.2.1		No. 1 Cont.	2' O.C.	900
Spiraea japonica 'Lemon Princes'	Lemon Princes Spiraea	2.2.2		No. 1 Cont.	3' O.C.	34
WETLAND PLANTS, 10 C.I. Plugs						
Iris tenax	Oregon Iris	12.5.1		10" C.I. Plugs	As Shown	207
Juncus patens	California Grey Rush	12.1.3		10" C.I. Plugs	As Shown	237
PERMANENT SEEDING (0.702 ACRE)		% COMPOSITION			LBS/ACRE	
Festuca rubra ssp. fallax var. Winward	Windward Chewings Fescue	20% PLS		Seed	13.15	-
Festuca rubra var. Garnett	Garnet Creeping Red Fescue	20% PLS		Seed	12.42	-
Lolium perenne var. Blazer 4	Blazer 4 Perennial Ryegrass	30% PLS		Seed	37.27	-
Lolium perenne var. Express II	Express II Perennial Ryegrass	30% PLS		Seed	37.27	-
WATER QUALITY SEEDING (0.340 ACRE)						
Bromus carinatus	California Brome	20% PLS		Seed	15.62	--
Elymus glaucus	Blue Wild-rye	20% PLS		Seed	13.91	--
Lupinus-polyphyllus	Large Leaf Lupine	10% PLS		Seed	28.88	--
Festuca rubra L. ssp. rubra	Native Red Fescue	50% PLS		Seed	6.96	--

GENERAL PLANTING NOTES

1. All construction shall be performed in accordance with current City of Milwaukie standards and the state of Oregon building and speciality codes.
2. Install erosion control systems in accordance with City of Milwaukie standards prior to site work and landscape installation.
3. Mark and protect all utilities, site features, and vegetation to remain in place.
4. Prior to planting, on-site topsoil shall be tested for soil fertility by a certified testing lab. if necessary, topsoil for tree pits, shrub pits, and ground cover beds shall be amended as recommended by the soil fertility report.
5. Landscape installation shall include provision of an automatic irritation system to sustain landscape plantings, meeting local and state building codes.
6. Plant material installed shall conform in size and grade to the "American Standard for Nursery Stock" current edition.
7. Landscape contractor shall water plantings for the duration of 1-year warranty period after installation and guarantee all plantings to be alive and in satisfactory health.
8. Plants shall be inspected and approved on-site prior to planting by owner or owner's representative.
9. Space Oregon Iris and California Grey Rush in clumps of 3, approximately 25' O.C. in swale where shown.

METHOD "B" (NON-CULTIVATED PLANTING AREAS

1. Spray weeds and non-desirable vegetation with herbicide to kill top growth and roots in areas not requiring cultivation.
2. Upon inspection, remove the dead top growth within 2 inches of the surface and dispose of according to Section 00320.
3. Replace any desirable plants damaged by spraying, at no additional cost to the Agency.
4. Add soil conditioners, soil amendments, soil bio-amendments or fertilizers with the plant backfill at each plant pit or the the seeding operation.
5. Finish weed removal planting areas to specified finish elevations, blending to existing ground smoothly, as required and directed.
6. Use herbicides around seedlings only upon approval of the Agency.

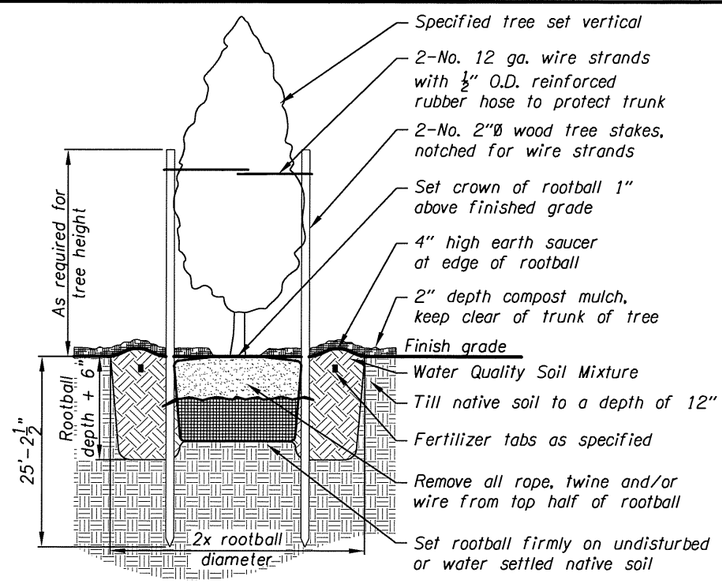

CONIFER TREE PLANTING

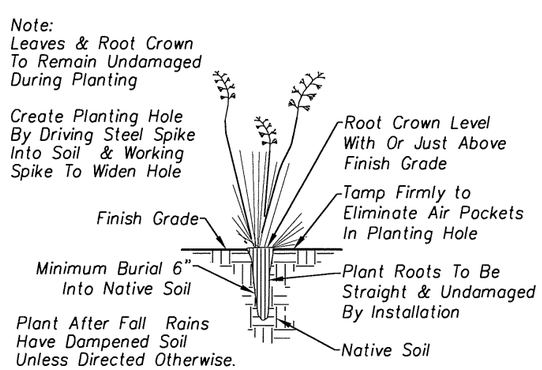

STYRO-BLOC PLUG PLANTING

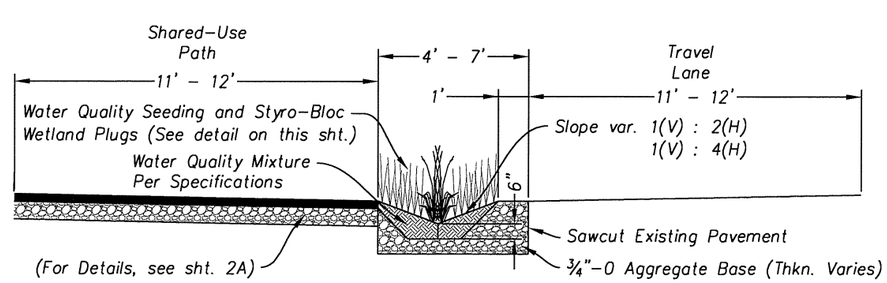

VEGETATED PLANTER STRIP

REGISTERED LANDSCAPE ARCHITECT
672
Scott W. Banker
OREGON
06/19/08

OREGON DEPARTMENT OF TRANSPORTATION

Harper Houf Peterson Righellis Inc.
ENGINEERS • PLANNERS • LANDSCAPE ARCHITECTS • SURVEYORS
205 SE Spokane Street, Suite 200 Portland, OR 97202 phone: 503.221.1131 www.hhpr.com fax: 503.221.1171

17TH AVE TRAIL: SE OCHOCO - SE MCLOUGHLIN
CITY OF MILWAUKIE
CLACKAMAS COUNTY

REVIEWED BY AJI
DESIGNED BY KJO
DRAFTED BY KJO

BID ITEM LOG AND SEEDING SCHEDULE

SHEET NO. GN

P:\MWK (City of Milwaukie)\MWK-24 (17TH Ave Trail)\MWK24-DWGS\SHEETS\ MWK24-GN.dwg

49V-026

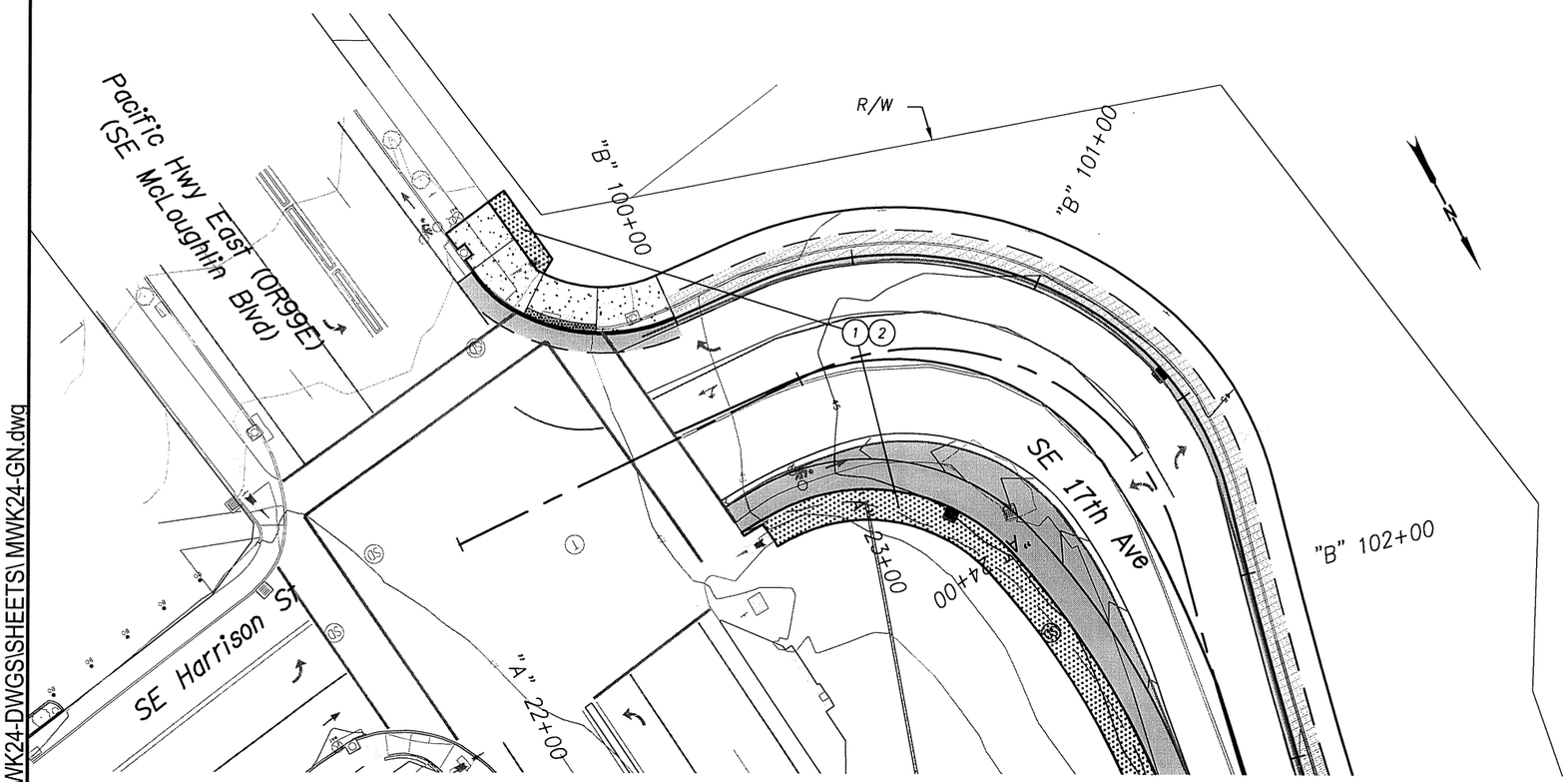

1. Install permanent seeding - .030 ac.
2. Install 4" water quality mixture - 16 c.y.

REGISTERED
672
Scott W. Banker
OREGON
06/19/08
LANDSCAPE ARCHITECT

OREGON DEPARTMENT OF TRANSPORTATION

Harper Houf Peterson Righellis Inc.
ENGINEERS • PLANNERS • LANDSCAPE ARCHITECTS • SURVEYORS
205 SE Spokane Street, Suite 200 Portland, OR 97202 phone: 503.221.1131 www.hhpr.com fax: 503.221.1171

17TH AVE TRAIL: SE OCHOCO - SE MCLOUGHLIN
CITY OF MILWAUKIE
CLACKAMAS COUNTY

REVIEWED BY AJI
DESIGNED BY KJO
DRAFTED BY KJO

PLANTING PLAN

SHEET NO. GN-2

P:\MWK (City of Milwaukie)\MWK-24 (17TH Ave Trail)\MWK24-DWGS\SHEETS\MWK24-GN.dwg

49V-026

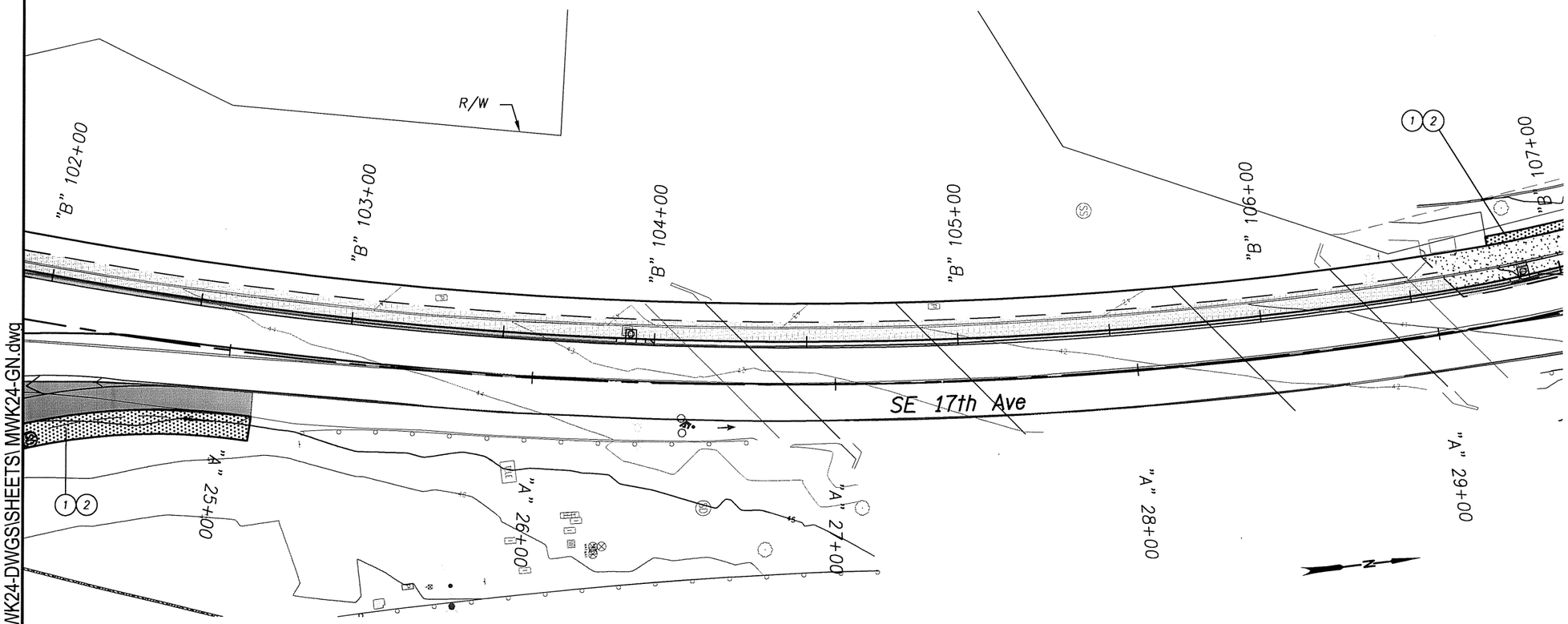

1. Install permanent seeding - .008 ac.
2. Install 4" water quality mixture - 4 c.y.

P:\MWK (City of Milwaukie)\MWK-24 (17TH Ave Trail)\MWK24-DWGS\SHEETS\ MWK24-GN.dwg

REGISTERED
672
Scott W. Banker
OREGON
06/19/08
LANDSCAPE ARCHITECT

OREGON DEPARTMENT OF TRANSPORTATION

Harper Houf Peterson Righellis Inc.
ENGINEERS • PLANNERS • LANDSCAPE ARCHITECTS • SURVEYORS
205 SE Spokane Street, Suite 200 Portland, OR 97202 phone: 503.221.1131 www.hhpr.com fax: 503.221.1171

17TH AVE TRAIL: SE OCHOCO - SE MCLOUGHLIN
CITY OF MILWAUKIE
CLACKAMAS COUNTY

REVIEWED BY AJI
DESIGNED BY KJO
DRAFTED BY KJO

PLANTING PLAN

SHEET NO. GN-3

49V-026

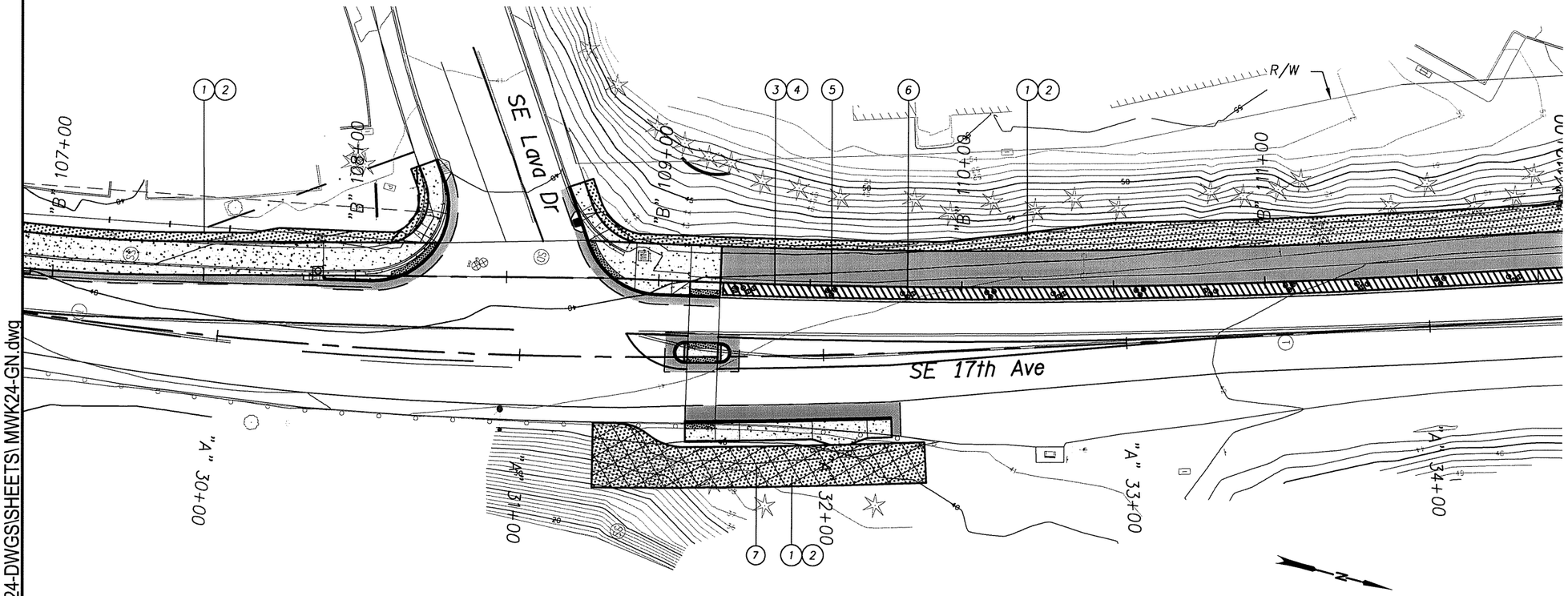

1. Install permanent seeding - 0.104 ac.
2. Install 4" water quality mixture - 56 c.y.
3. Install water quality seeding - 0.028 ac.
4. Install 6" water quality mixture - 23 c.y.
5. Install Iris tenax - 15 ea.
6. Install Juncus patens - 18 ea.
7. Provide weed control in accordance with section 01030 of the 2015 Oregon Standard Specifications for Construction

Weed control area shown thus

REGISTERED
672
Scott W. Banker
OREGON
06/19/08
LANDSCAPE ARCHITECT

OREGON DEPARTMENT OF TRANSPORTATION

Harper Houf Peterson Righellis Inc.
ENGINEERS • PLANNERS • LANDSCAPE ARCHITECTS • SURVEYORS
205 SE Spokane Street, Suite 200 Portland, OR 97202 phone: 503.221.1131 www.hhpr.com fax: 503.221.1171

17TH AVE TRAIL: SE OCHOCO - SE MCLOUGHLIN
CITY OF MILWAUKIE
CLACKAMAS COUNTY

REVIEWED BY AJI
DESIGNED BY KJO
DRAFTED BY KJO

PLANTING PLAN

SHEET NO. GN-4

P:\MWK (City of Milwaukie)\MWK-24 (17TH Ave Trail)\MWK24-DWGS\SHEETS\ MWK24-GN.dwg

49V-026

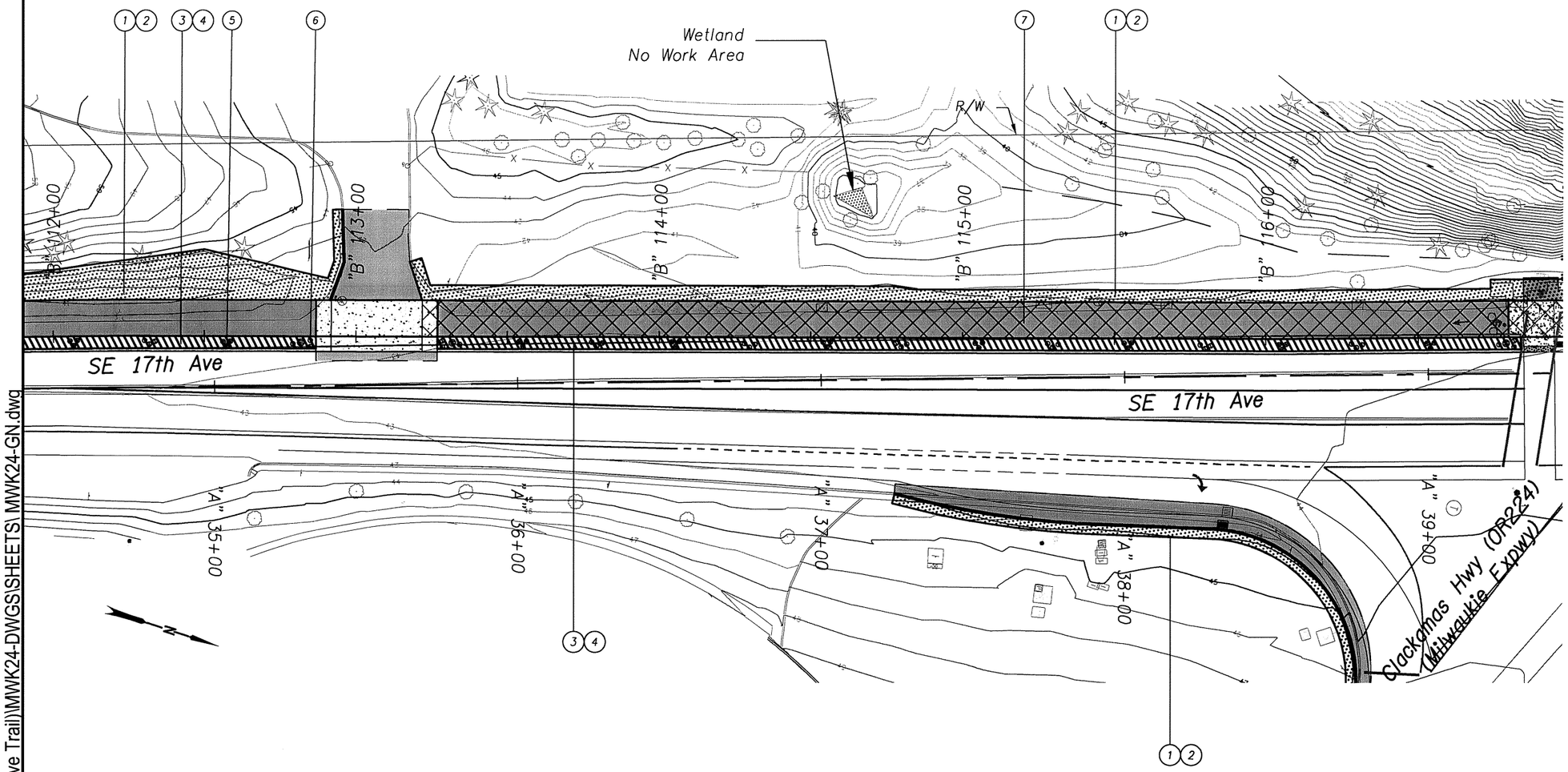

1. Install permanent seeding - 0.092 ac.
2. Install 4" water quality mixture - 50 c.y.
3. Install water quality seeding - 0.045 ac.
4. Install 6" water quality mixture - 36 c.y.
5. Install Iris tenax - 27 ea.
6. Install Juncus patens - 30 ea.
7. Provide weed control in accordance with section 01030 of the 2015 Oregon Standard Specifications for Construction

Weed control area shown thus

REGISTERED
672
Scott W. Banker
OREGON
06/19/08
LANDSCAPE ARCHITECT

OREGON DEPARTMENT OF TRANSPORTATION

Harper Houf Peterson Righellis Inc.
ENGINEERS • PLANNERS • LANDSCAPE ARCHITECTS • SURVEYORS
205 SE Spokane Street, Suite 200 Portland, OR 97202 phone: 503.221.1131 www.hhpr.com fax: 503.221.1171

17TH AVE TRAIL: SE OCHOCO - SE MCLOUGHLIN
CITY OF MILWAUKIE
CLACKAMAS COUNTY

REVIEWED BY AJI
DESIGNED BY KJO
DRAFTED BY KJO

PLANTING PLAN

SHEET NO. GN-5

P:\MWK (City of Milwaukie)\MWK-24 (17TH Ave Trail)\MWK24-DWGS\SHEETS\ MWK24-GN.dwg

49V-026

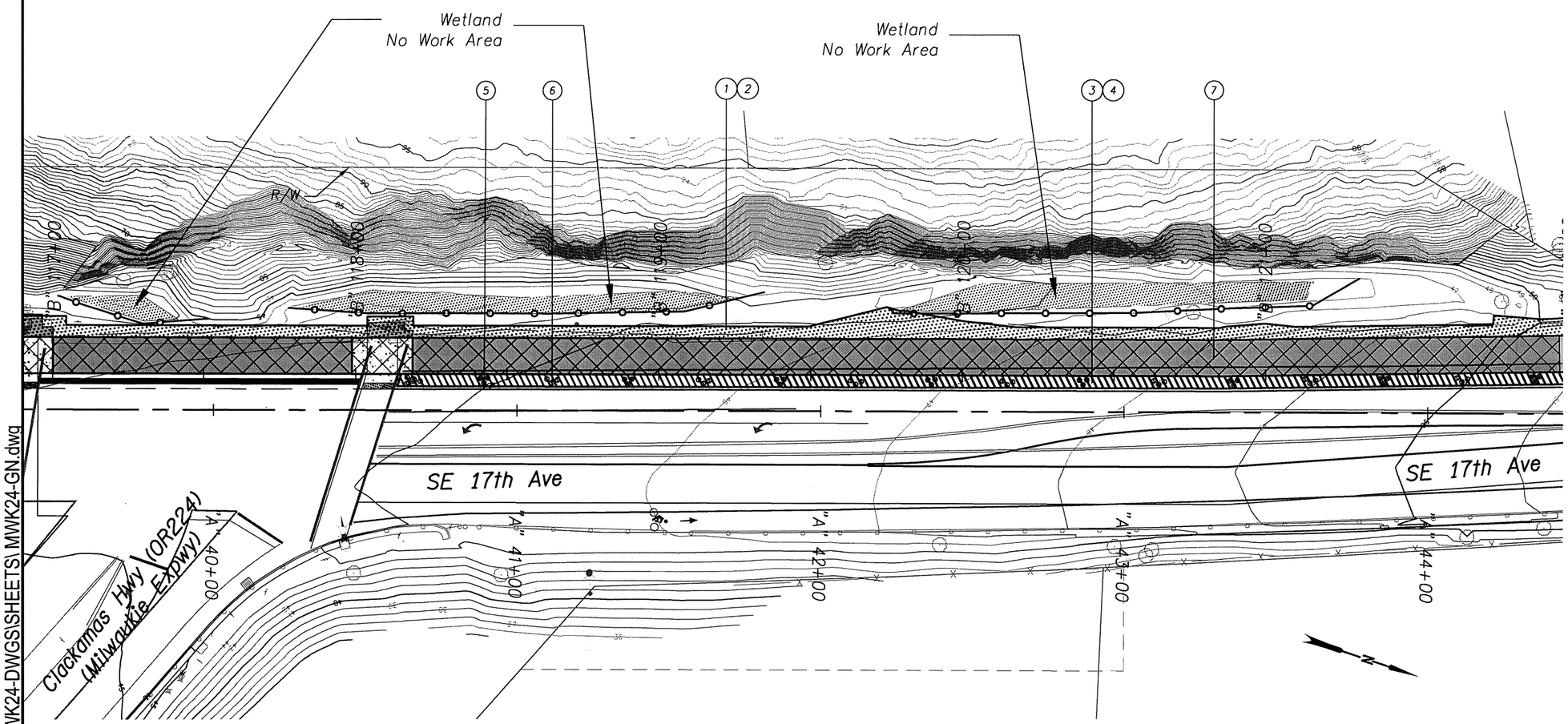

1. Install permanent seeding - 0.059 ac.
2. Install 4" water quality mixture - 32 c.y.
3. Install water quality seeding - 0.038 ac.
4. Install 6" water quality mixture - 31 c.y.
5. Install Iris tenax - 24 ea.
6. Install Juncus patens - 24 ea.
7. Provide weed control in accordance with section 01030 of the 2015 Oregon Standard Specifications for Construction

Weed control area shown thus

REGISTERED
672
Scott W. Banker
OREGON
06/19/08
LANDSCAPE ARCHITECT

OREGON DEPARTMENT OF TRANSPORTATION

Harper Houf Peterson Righellis Inc.
ENGINEERS • PLANNERS • LANDSCAPE ARCHITECTS • SURVEYORS
205 SE Spokane Street, Suite 200 Portland, OR 97202 phone: 503.221.1131 www.hhpr.com fax: 503.221.1171

17TH AVE TRAIL: SE OCHOCO - SE MCLOUGHLIN
CITY OF MILWAUKIE
CLACKAMAS COUNTY

REVIEWED BY AJI
DESIGNED BY KJO
DRAFTED BY KJO

PLANTING PLAN

SHEET NO. GN-6

P:\MWK (City of Milwaukie)\MWK-24 (17TH Ave Trail)\MWK24-DWGS\SHEETS\ MWK24-GN.dwg

49V-026

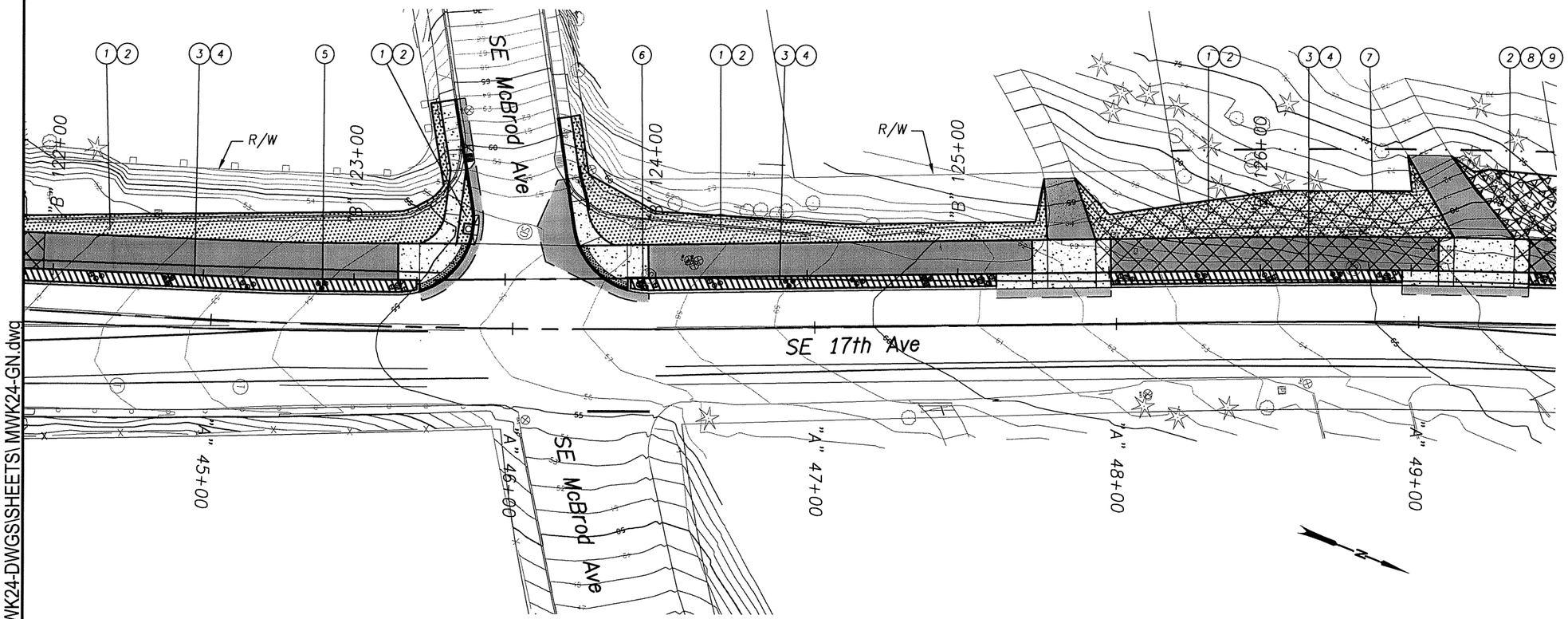

1. Install permanent seeding - 0.108 ac.
2. Install 4" water quality mixture - 65 c.y.
3. Install water quality seeding - 0.035 ac.
4. Install 6" water quality mixture - 28 c.y.
5. Install Iris tenax - 18 ea.
6. Install Juncus patens - 33 ea.
7. Provide weed control in accordance with section 01030 of the 2015 Oregon Standard Specifications for Construction
8. Install Cotoneaster dammeri 'Lowfast' - 49 ea.
9. Install 2" compost mulch - 3 c.y.

Weed control area shown thus

REGISTERED
672
Scott W. Banker
OREGON
06/19/08
LANDSCAPE ARCHITECT

OREGON DEPARTMENT OF TRANSPORTATION

Harper Houf Peterson Righellis Inc.
ENGINEERS • PLANNERS • LANDSCAPE ARCHITECTS • SURVEYORS
205 SE Spokane Street, Suite 200 Portland, OR 97202 phone: 503.221.1131 www.hhpr.com fax: 503.221.1171

17TH AVE TRAIL: SE OCHOCO - SE MCLOUGHLIN
CITY OF MILWAUKIE
CLACKAMAS COUNTY

REVIEWED BY AJI
DESIGNED BY KJO
DRAFTED BY KJO

PLANTING PLAN

SHEET NO. GN-7

P:\MWK (City of Milwaukie)\MWK-24 (17TH Ave Trail)\MWK24-DWGS\SHEETS\ MWK24-GN.dwg

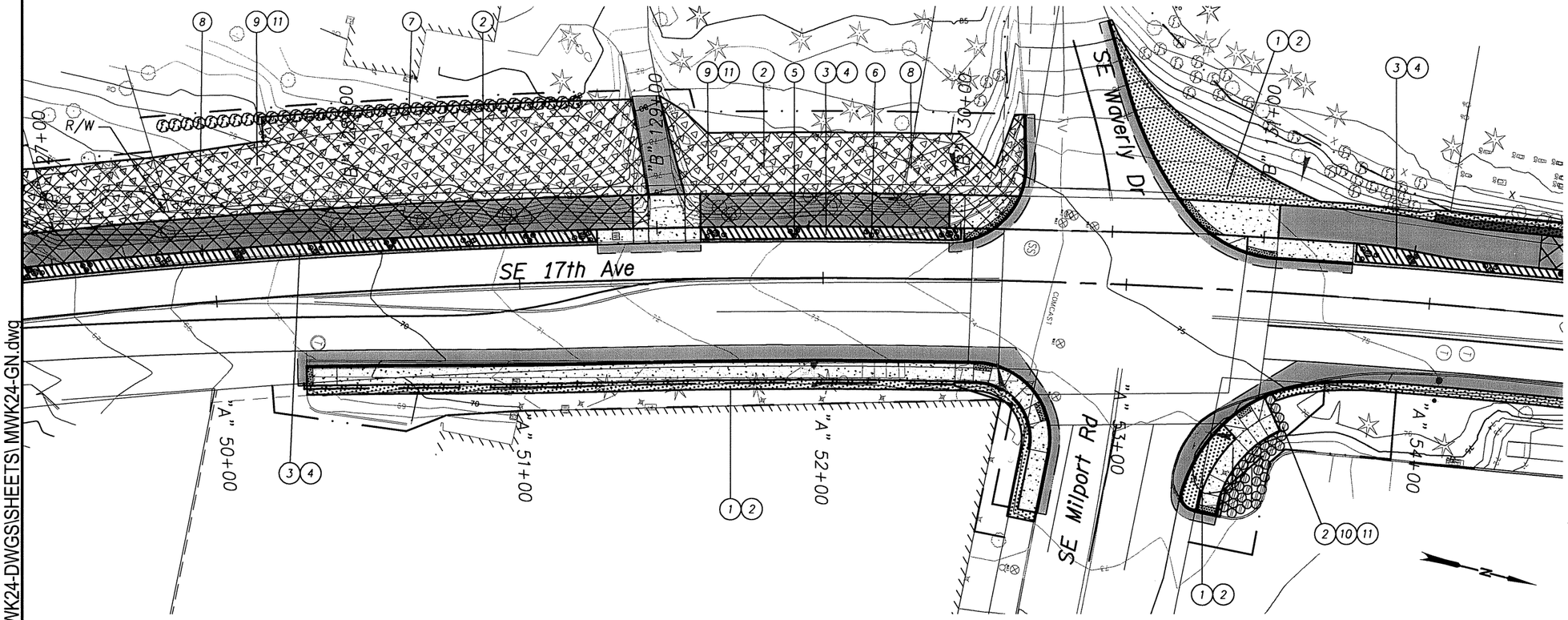

1. Install permanent seeding - 0.064 ac.
2. Install 4" water quality mixture - 141 c.y.
3. Install water quality seeding - 0.034 ac.
4. Install 6" water quality mixture - 27 c.y.
5. Install Iris tenax - 18 ea.
6. Install Juncus patens - 27 ea.
7. Install Thuja occidentalis 'Smaragd' - 35 ea.
8. Provide weed control in accordance with section 01030 of the 2015 Oregon Standard Specifications for Construction
9. Install Cotoneaster dammeri 'Lowfast' - 851 ea.
10. Install Spiraea japonica 'Lemon Princes' - 34 ea.
11. Install 2" compost mulch - 57 c.y.

Weed control area shown thus

REGISTERED
672
Scott W. Banker
OREGON
06/19/08
LANDSCAPE ARCHITECT

OREGON DEPARTMENT OF TRANSPORTATION

Harper Houf Peterson Righellis Inc.
ENGINEERS • PLANNERS • LANDSCAPE ARCHITECTS • SURVEYORS
205 SE Spokane Street, Suite 200 Portland, OR 97202 phone: 503.221.1131 www.hhpr.com fax: 503.221.1171

17TH AVE TRAIL: SE OCHOCO - SE MCLOUGHLIN
CITY OF MILWAUKIE
CLACKAMAS COUNTY

REVIEWED BY AJI
DESIGNED BY KJO
DRAFTED BY KJO

PLANTING PLAN

SHEET NO. GN-8

P:\MWK (City of Milwaukie)\MWK-24 (17TH Ave Trail)\MWK24-DWGS\SHEETS\ MWK24-GN.dwg

49V-026

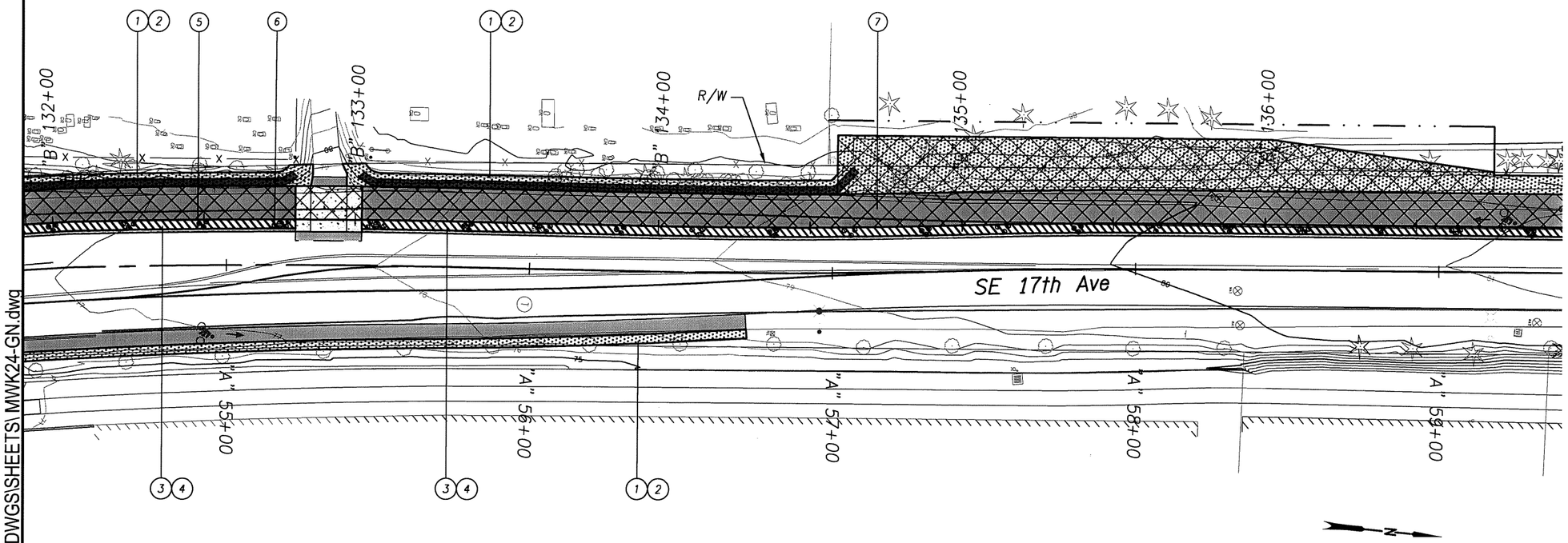

1. Install permanent seeding - 0.136 ac.
2. Install 4" water quality mixture - 73 c.y.
3. Install water quality seeding - 0.036 ac.
4. Install 6" water quality mixture - 29 c.y.
5. Install Iris tenax - 30 ea.
6. Install Juncus patens - 30 ea.
7. Provide weed control in accordance with section 01030 of the 2015 Oregon Standard Specifications for Construction

Weed control area shown thus

REGISTERED 672 Scott W. Banker OREGON 06/19/08 LANDSCAPE ARCHITECT

OREGON DEPARTMENT OF TRANSPORTATION

Harper Houf Peterson Righellis Inc.
ENGINEERS • PLANNERS • LANDSCAPE ARCHITECTS • SURVEYORS
205 SE Spokane Street, Suite 200 Portland, OR 97202 phone: 503.221.1131 www.hhpr.com fax: 503.221.1171

17TH AVE TRAIL: SE OCHOCO - SE MCLOUGHLIN
CITY OF MILWAUKIE
CLACKAMAS COUNTY

REVIEWED BY AJI
DESIGNED BY KJO
DRAFTED BY KJO

PLANTING PLAN

SHEET NO. GN-9

P:\MWK (City of Milwaukie)\MWK-24 (17TH Ave Trail)\MWK24-DWGS\SHEETS\MWK24-GN.dwg

49V-026

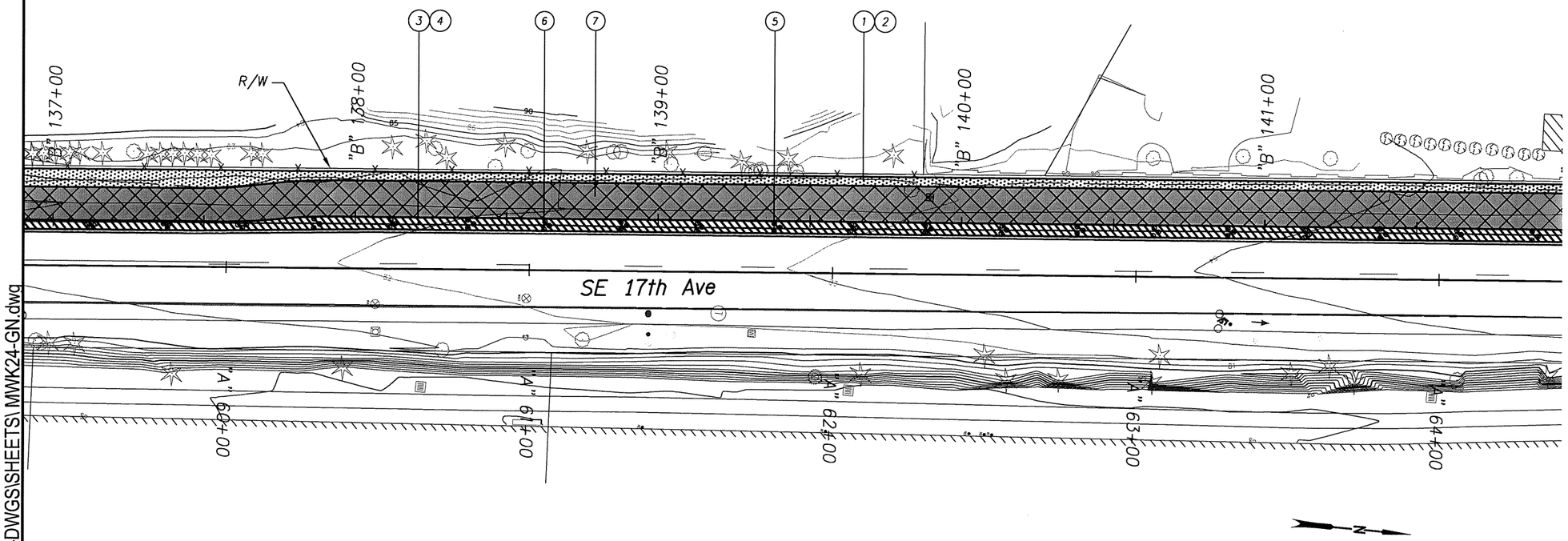

1. Install permanent seeding - 0.043 ac.
2. Install 4" water quality mixture - 23 c.y.
3. Install water quality seeding - 0.049 ac.
4. Install 6" water quality mixture - 39 c.y.
5. Install Iris tenax - 30 ea.
6. Install Juncus patens - 30 ea.
7. Provide weed control in accordance with section 01030 of the 2015 Oregon Standard Specifications for Construction

Weed control area shown thus

REGISTERED
672
Scott W. Banker
OREGON
06/19/08
LANDSCAPE ARCHITECT

OREGON DEPARTMENT OF TRANSPORTATION

Harper Houf Peterson Righellis Inc.
ENGINEERS • PLANNERS • LANDSCAPE ARCHITECTS • SURVEYORS
205 SE Spokane Street, Suite 200 Portland, OR 97202 phone: 503.221.1131 www.hhpr.com fax: 503.221.1171

17TH AVE TRAIL: SE OCHOCO - SE MCLOUGHLIN
CITY OF MILWAUKIE
CLACKAMAS COUNTY

REVIEWED BY AJI
DESIGNED BY KJO
DRAFTED BY KJO

PLANTING PLAN

SHEET NO. GN-10

P:\MWK (City of Milwaukie)\MWK-24 (17TH Ave Trail)\MWK24-DWGS\SHEETS\ MWK24-GN.dwg

49V-026

1. Install permanent seeding - 0.38 ac.
2. Install 4" water quality mixture - 20 c.y.
3. Install water quality seeding - 0.050 ac.
4. Install 6" water quality mixture - 41 c.y.
5. Install Iris tenax - 30 ea.
6. Install Juncus patens - 30 ea.
7. Provide weed control in accordance with section 01030 of the 2015 Oregon Standard Specifications for Construction

Weed control area shown thus

REGISTERED
672
Scott W. Banker
OREGON
06/19/08
LANDSCAPE ARCHITECT

OREGON DEPARTMENT OF TRANSPORTATION

Harper Houf Peterson Righellis Inc.
ENGINEERS • PLANNERS • LANDSCAPE ARCHITECTS • SURVEYORS
205 SE Spokane Street, Suite 200 Portland, OR 97202 phone: 503.221.1131 www.hhpr.com fax: 503.221.1171

17TH AVE TRAIL: SE OCHOCO - SE MCLOUGHLIN
CITY OF MILWAUKIE
CLACKAMAS COUNTY

REVIEWED BY AJI
DESIGNED BY KJO
DRAFTED BY KJO

PLANTING PLAN

SHEET NO. GN-11

P:\MWK (City of Milwaukie)\MWK-24 (17TH Ave Trail)\MWK24-DWGS\SHEETS\ MWK24-GN.dwg

49V-026

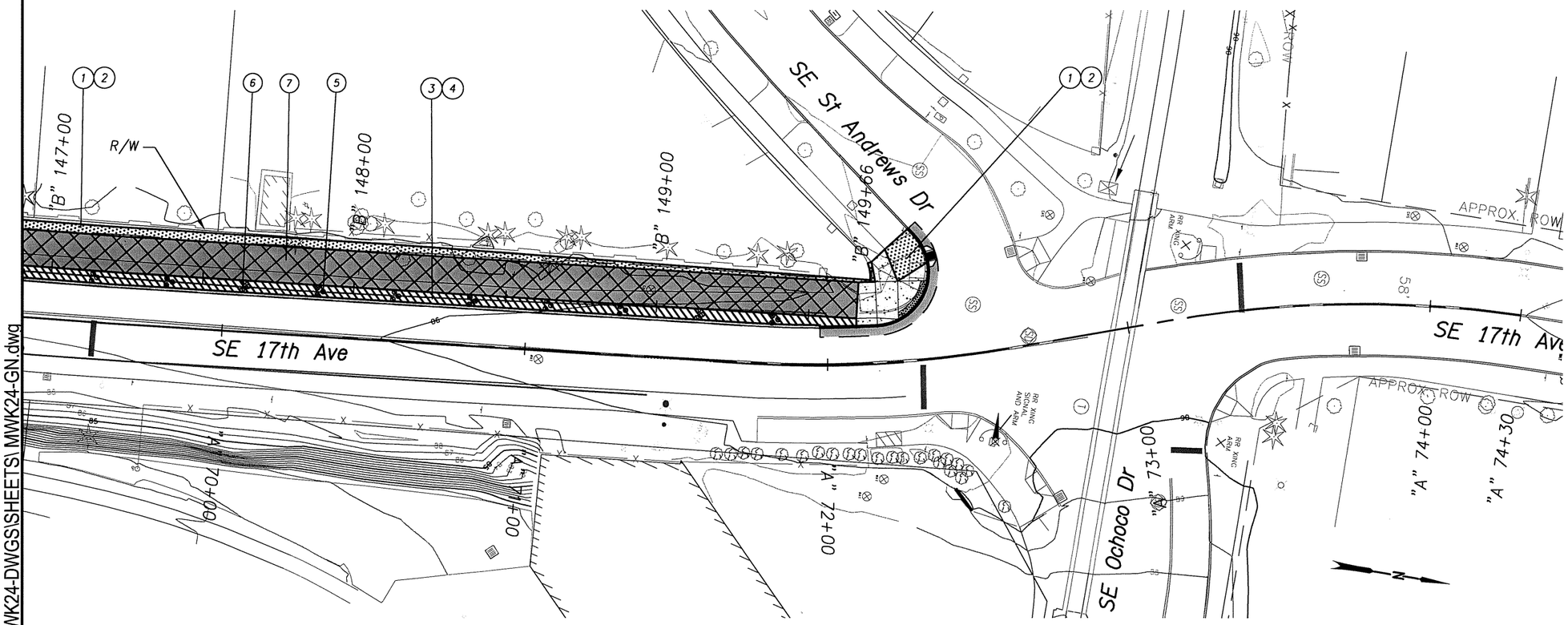

1. Install permanent seeding - 0.020 ac.
2. Install 4" water quality mixture - 11 c.y.
3. Install water quality seeding - 0.025 ac.
4. Install 6" water quality mixture - 20 c.y.
5. Install Iris tenax - 15 ea.
6. Install Juncus patens - 15 ea.
7. Provide weed control in accordance with section 01030 of the 2015 Oregon Standard Specifications for Construction

Weed control area shown thus

REGISTERED
672
Scott W. Banker
OREGON
06/19/08
LANDSCAPE ARCHITECT

OREGON DEPARTMENT OF TRANSPORTATION

Harper Houf Peterson Righellis Inc.
ENGINEERS • PLANNERS • LANDSCAPE ARCHITECTS • SURVEYORS
205 SE Spokane Street, Suite 200 Portland, OR 97202 phone: 503.221.1131 www.hhpr.com fax: 503.221.1171

17TH AVE TRAIL: SE OCHOCO - SE MCLOUGHLIN
CITY OF MILWAUKIE
CLACKAMAS COUNTY

REVIEWED BY AJI
DESIGNED BY KJO
DRAFTED BY KJO

PLANTING PLAN

SHEET NO. GN-12

P:\MWK (City of Milwaukie)\MWK-24 (17TH Ave Trail)\MWK24-DWGS\SHEETS\ MWK24-GN.dwg

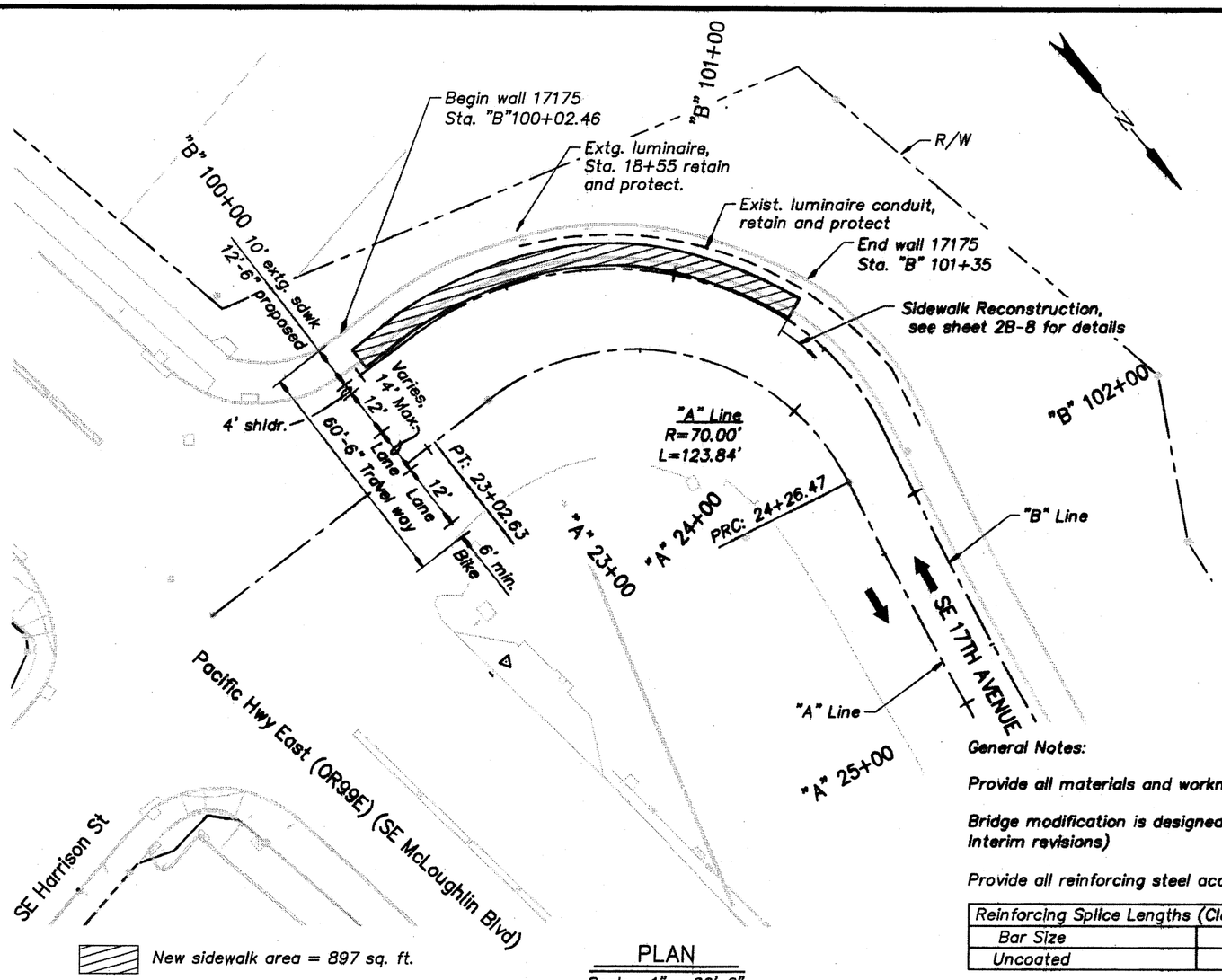

New sidewalk area = 897 sq. ft.

PLAN
Scale : 1" = 20'-0"

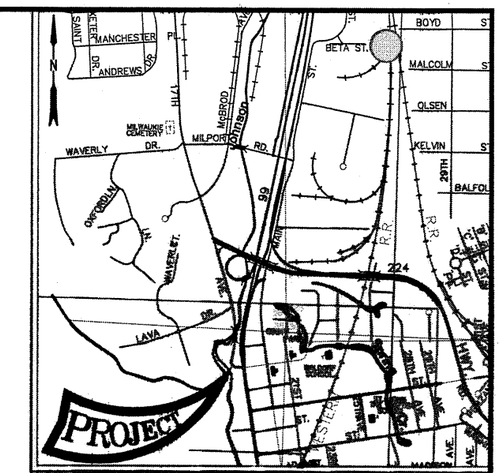

SEC. 25, 26 & 35, T. 1 S., R. 1 E., W.M.
LOCATION MAP
No Scale

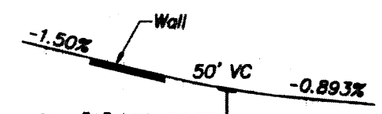

GRADELINE DIAGRAM
No Scale

General Notes:

Provide all materials and workmanship according to the Oregon Standard Specifications for Construction 2015.

Bridge modification is designed in accordance with the AASHTO LRFD Bridge Design Specifications, 7th Edition (Including 2015 Interim revisions)

Provide all reinforcing steel according to ASTM Specification A706. or AASHTO Specification M31 (ASTM A615) Grade 60

Reinforcing Splice Lengths (Class B) Grade 60 f'c = 3.3 ksi		
Bar Size	#4	#5
Uncoated	1'-4"	1'-8"

Splice reinforcing steel at alternate bars, staggered at least one splice length or as far as possible, unless shown otherwise.

Use uncoated reinforcing steel in new sidewalk construction

Place bars 2" clear of the nearest face of concrete (unless shown otherwise).

Provide Class 3300 - 1 or ¾ concrete for all concrete.

SCALE WARNING
If scale bar doesn't measure one inch then drawing is not to scale

Δ	DATE	REVISION	BY

DRAFTER: Rob Rousser
DESIGNER: Scott Nettleton
CHECKER: ---
REVIEWER: Daniel Pavela

DESIGNER-RESPONSIBLE CHARGE
REGISTERED PROFESSIONAL ENGINEER 17,962 OREGON JULY 10, 1992 SCOTT M. NETTLETON
EXPIRES: 12-31-2016

OREGON DEPARTMENT OF TRANSPORTATION
T·Y·LIN INTERNATIONAL
engineers | planners | scientists

STRUCTURE NO. 17175
DATE Oct. 2015
CALC. BOOK ---

17TH AVE. MSE WALL
17TH AVE TRAIL: SE OCHOCO – SE MCLOUGHLIN
CITY OF MILWAUKIE, CLACKAMAS COUNTY

PLAN

SHEET 1 OF 2
DRAWING NO. 96673

R:\500089.00_17th Ave Trail\600 CADD\1_Official\17_SHEET_02-1_TYLI_PLAN.dwg 2/13/2014 8:58 AM

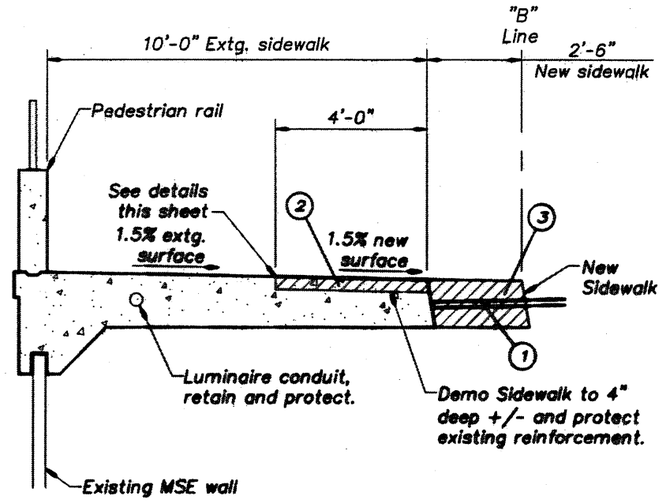

PARTIAL SECTION

Scale: ½" = 1'-0"

NOTES:

1. Remove extg. ACWS as required.
2. Partial demolition of extg. walk.
3. Construct new walk. See details this sheet.

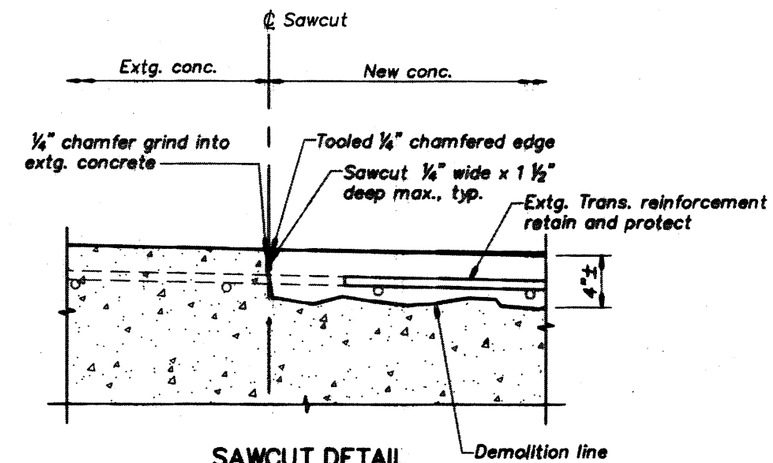

SAWCUT DETAIL

Scale: 1" = 2'-0"

Notes:

1. Demolish concrete with hydro demolition or hand operated techniques, retain and protect extg. transverse reinforcement.
2. Sawcut in multiple passes with tracked directional control to depth as required to achieve curved alignment.

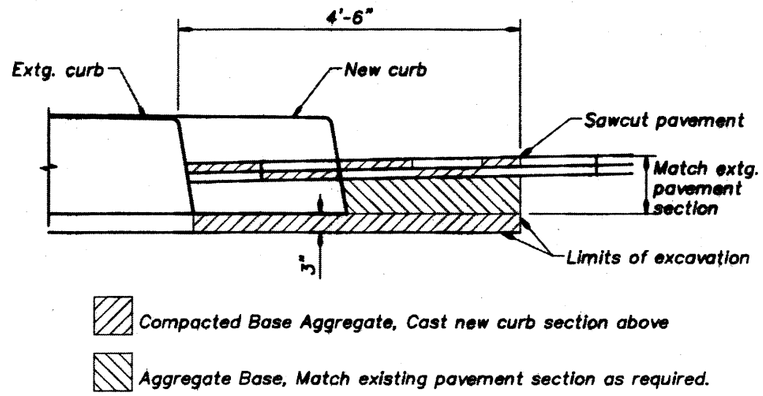

PAVEMENT REMOVAL AND REPLACEMENT DETAIL

Scale: 1" = 1'-0"

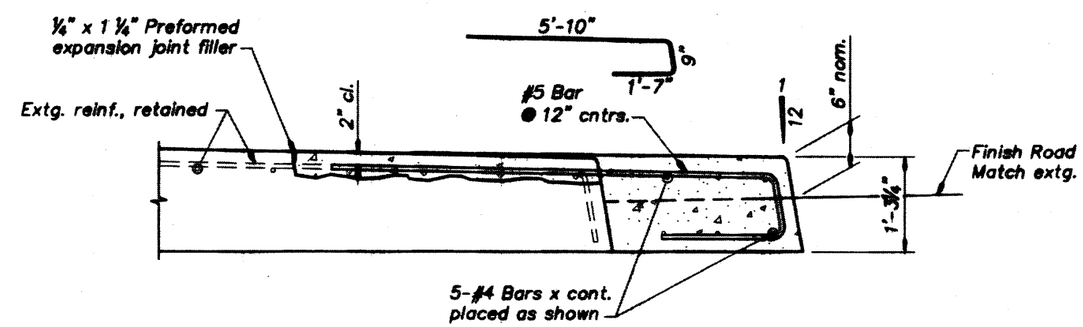

SIDEWALK REINFORCING DETAIL

Scale: 1" = 1'-0"

SCALE WARNING

If scale bar doesn't measure one inch then drawing is not to scale

△	DATE	REVISION	BY

DRAFTER: Rob Rousser
DESIGNER: Scott Nettleton
CHECKER: ---
REVIEWER: Dan Pavela

DESIGNER-RESPONSIBLE CHARGE
REGISTERED PROFESSIONAL ENGINEER 17,868 OREGON JULY 19, 1994 SCOTT M. NETTLETON
EXPIRES: 12-31-2016

OREGON DEPARTMENT OF TRANSPORTATION

TY·LIN INTERNATIONAL
engineers | planners | scientists

STRUCTURE NO. 17175
DATE Oct. 2015
CALC. BOOK ---

17TH AVE. MSE WALL
17TH AVE TRAIL: SE OCHOCO – SE MCLOUGHLIN
CITY OF MILWAUKIE, CLACKAMAS COUNTY

DETAILS

SHEET 2 OF 2
DRAWING NO. 96674

R:\500069.00_17th Ave Trail\600 CADD\1_Official\17_SHEET_02-2_TYLI_DETAILS.dwg 2/13/2014 8:58 AM

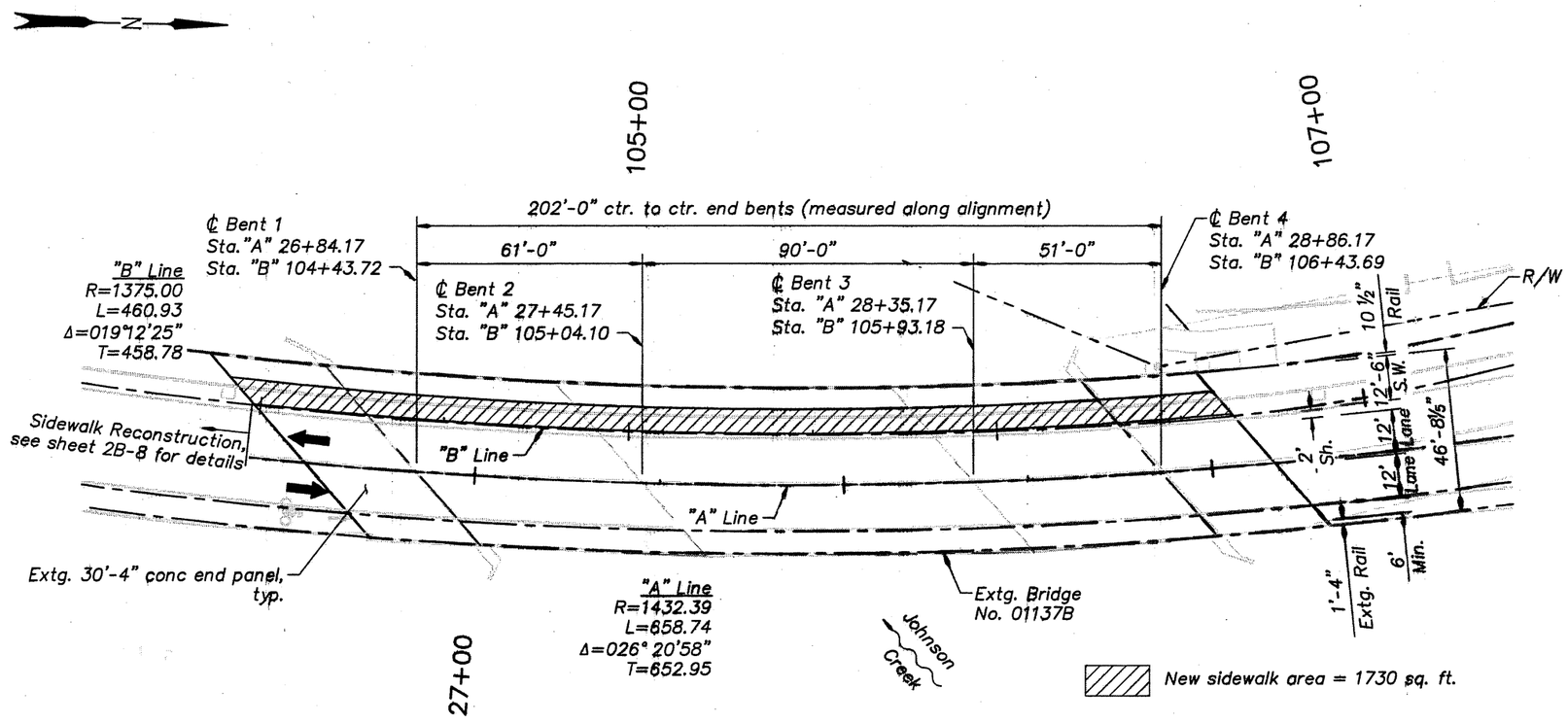

PLAN

Scale : 1" = 20'-0"

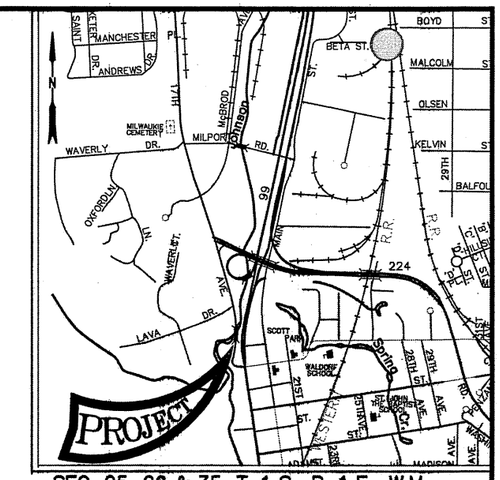

SEC. 25, 26 & 35, T. 1 S., R. 1 E., W.M.

LOCATION MAP

No Scale

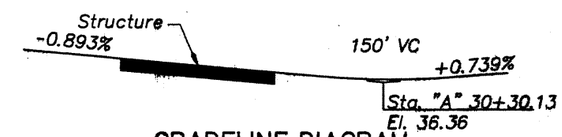

GRADELINE DIAGRAM

No Scale

General Notes:

Provide all materials and workmanship according to the Oregon Standard Specifications for Construction 2015.

Bridge modification is designed in accordance with the AASHTO LRFD Bridge Design Specifications, 7th Edition (Including 2015 Interim revisions)

Provide all reinforcing steel according to ASTM Specification A706, or AASHTO Specification M31 (ASTM A615) Grade 60

Reinforcing Splice Lengths (Class B) Grade 60 f'c = 3.3 ksi		
Bar Size	#4	#5
Uncoated	1'-4"	1'-8"

Splice reinforcing steel at alternate bars, staggered at least one splice length or as far as possible, unless shown otherwise.

Use uncoated reinforcing steel in new sidewalk construction

Place bars 2" clear of the nearest face of concrete (unless shown otherwise).

Provide Class 3300 - 1 or ¾ concrete for all concrete.

SCALE WARNING

If scale bar doesn't measure one inch then drawing is not to scale

DATE	REVISION	BY

DRAFTER: Rob Rousser
DESIGNER: Scott Nettleton
CHECKER: ---
REVIEWER: Daniel Pavela

DESIGNER-RESPONSIBLE CHARGE
REGISTERED PROFESSIONAL ENGINEER 17,268 OREGON JULY 18, 1994 SCOTT M. NETTLETON
EXPIRES: 12-31-2016

OREGON DEPARTMENT OF TRANSPORTATION

TY·LIN INTERNATIONAL
engineers | planners | scientists

STRUCTURE NO. 01137B
DATE Oct. 2015
CALC. BOOK ---

JOHNSON CREEK (17TH AVE.) BRIDGE
17TH AVE TRAIL: SE OCHOCO – SE MCLOUGHLIN
CITY OF MILWAUKIE, CLACKAMAS COUNTY

PLAN

SHEET 1 OF 2

DRAWING NO. 96675

R:\500069.00_17th Ave Trail\600 CADD\1_Official\17_SHEET_01-1_TYLL_PLAN.dwg 2/13/2014 8:56 AM

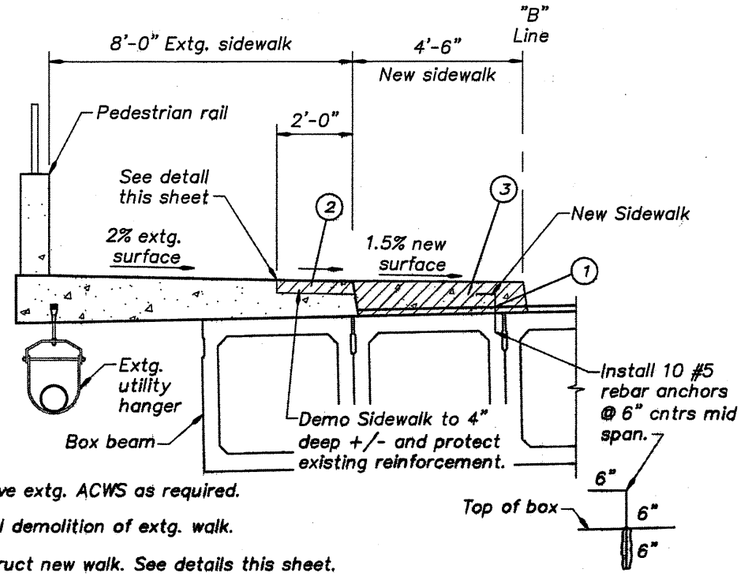

NOTES:

1. Remove extg. ACWS as required.
2. Partial demolition of extg. walk.
3. Construct new walk. See details this sheet.

PARTIAL SECTION

Scale: ½" = 1'-0"

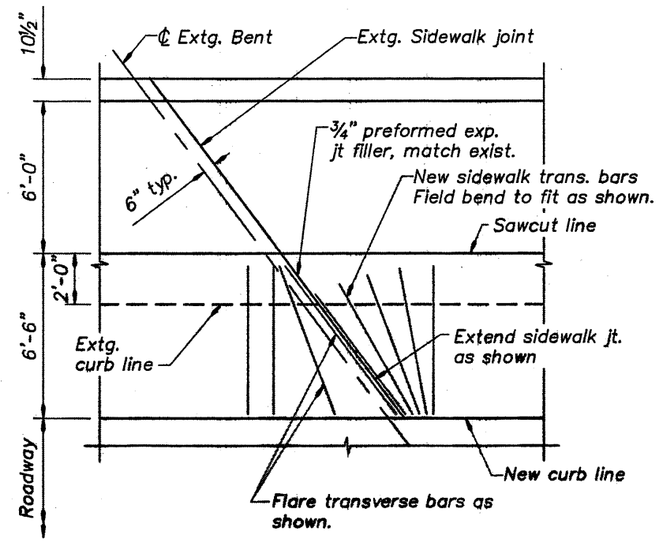

SIDEWALK JOINT DETAIL

Scale: 1" = 4'-0"

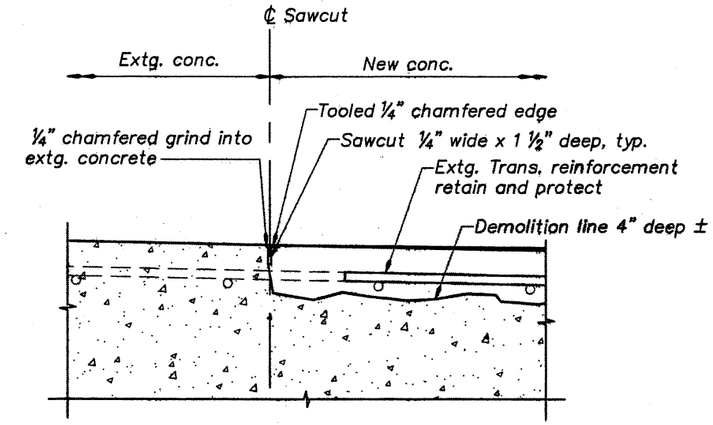

Note: Demolish concrete with hydro demolition or hand operated techniques, retain and protect extg. transverse reinforcement.

SAWCUT DETAIL

Scale: 1" = 2'-0"

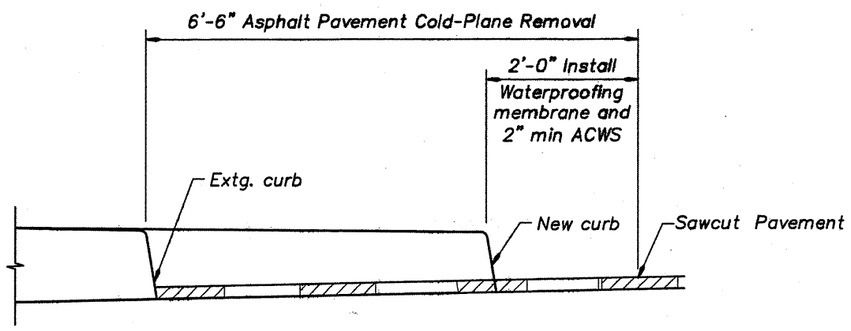

PAVEMENT REMOVAL AND REPLACEMENT DETAIL

Scale: 1" = 1'-0"

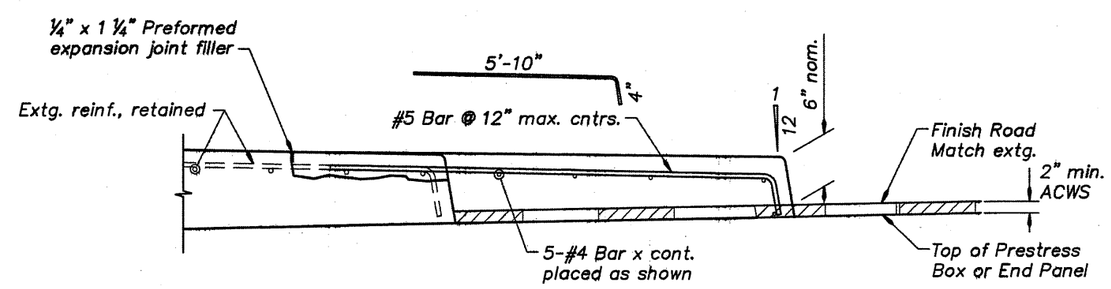

SIDEWALK REINFORCING DETAIL

Scale: 1" = 1'-0"

SCALE WARNING

If scale bar doesn't measure one inch then drawing is not to scale

△	DATE	REVISION	BY

DRAFTER: Rob Rousser
DESIGNER: Scott Nettleton
CHECKER: ---
REVIEWER: Dan Pavela

DESIGNER-RESPONSIBLE CHARGE
REGISTERED PROFESSIONAL ENGINEER 17,352 OREGON JULY 19, 1994 SCOTT M. NETTLETON
EXPIRES: 12-31-2016

OREGON DEPARTMENT OF TRANSPORTATION

T·Y·LIN INTERNATIONAL
engineers | planners | scientists

STRUCTURE NO. 01137B
DATE Oct. 2015
CALC. BOOK ---

JOHNSON CREEK (17TH AVE.) BRIDGE
17TH AVE TRAIL: SE OCHOCO – SE MCLOUGHLIN
CITY OF MILWAUKIE, CLACKAMAS COUNTY

DETAILS

SHEET 2 OF 2
DRAWING NO. 96676

R:\500069.00_17th Ave Trail\600 CADD\1_Official\17_SHEET_01-2_TYLI_DETAILS.dwg 2/13/2014 8:56 AM

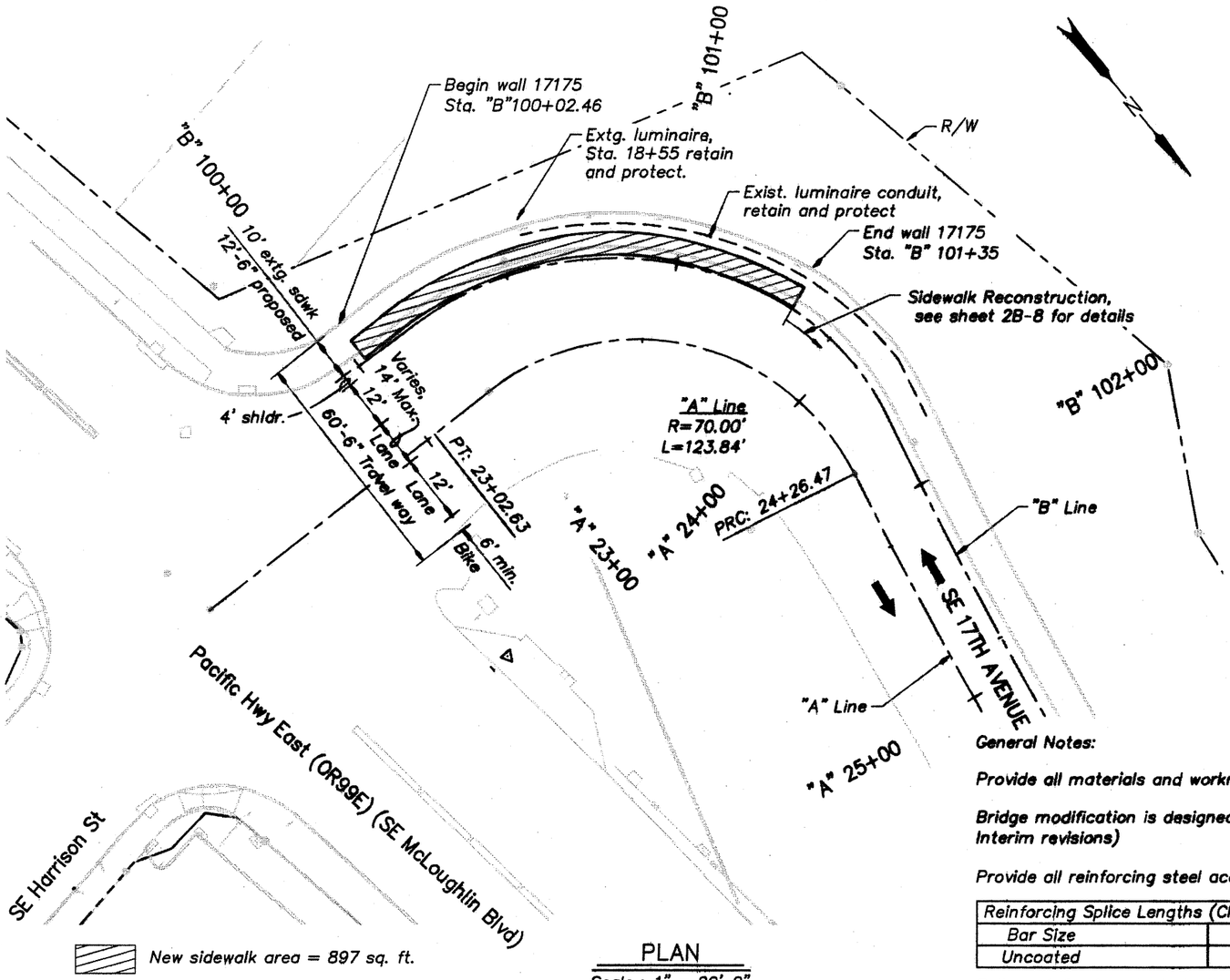

PLAN
Scale : 1" = 20'-0"

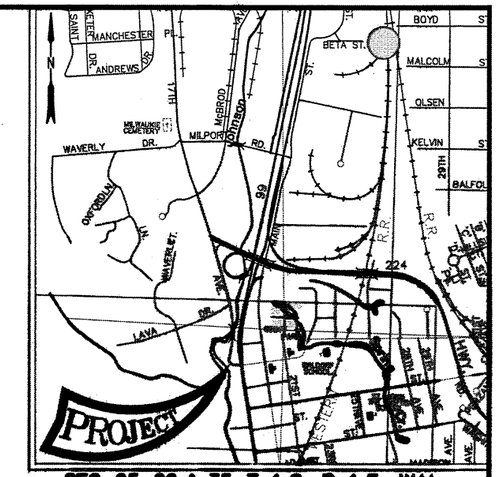

SEC. 25, 26 & 35, T. 1 S., R. 1 E., W.M.
LOCATION MAP
No Scale

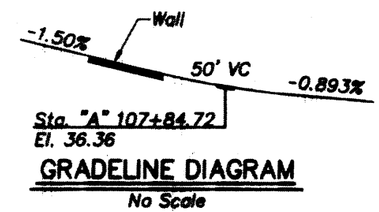

GRADELINE DIAGRAM
No Scale

General Notes:

Provide all materials and workmanship according to the Oregon Standard Specifications for Construction 2015.

Bridge modification is designed in accordance with the AASHTO LRFD Bridge Design Specifications, 7th Edition (Including 2015 Interim revisions)

Provide all reinforcing steel according to ASTM Specification A706, or AASHTO Specification M31 (ASTM A615) Grade 60

Reinforcing Splice Lengths (Class B) Grade 60 f'c = 3.3 ksi		
Bar Size	#4	#5
Uncoated	1'-4"	1'-8"

Splice reinforcing steel at alternate bars, staggered at least one splice length or as far as possible, unless shown otherwise.

Use uncoated reinforcing steel in new sidewalk construction

Place bars 2" clear of the nearest face of concrete (unless shown otherwise).

Provide Class 3300 - 1 or ¾ concrete for all concrete.

SCALE WARNING
If scale bar doesn't measure one inch then drawing is not to scale

	DATE	REVISION	BY

DRAFTER: Rob Rousser
DESIGNER: Scott Nettleton
CHECKER: ---
REVIEWER: Daniel Pavela

DESIGNER-RESPONSIBLE CHARGE
REGISTERED PROFESSIONAL ENGINEER 17.962 OREGON JULY 19, 1994 SCOTT M. NETTLETON
EXPIRES: 12-31-2016

OREGON DEPARTMENT OF TRANSPORTATION
T·Y·LIN INTERNATIONAL
engineers | planners | scientists

STRUCTURE NO. 17175
DATE Oct. 2015
CALC. BOOK ---

17TH AVE. MSE WALL
17TH AVE TRAIL: SE OCHOCO – SE MCLOUGHLIN
CITY OF MILWAUKIE, CLACKAMAS COUNTY

PLAN

SHEET 1 OF 2
DRAWING NO. 96673

R:\500069.00_17th Ave Trail\600 CADD\1_Official\17_SHEET_02-1_TYLI_PLAN.dwg 2/13/2014 8:58 AM

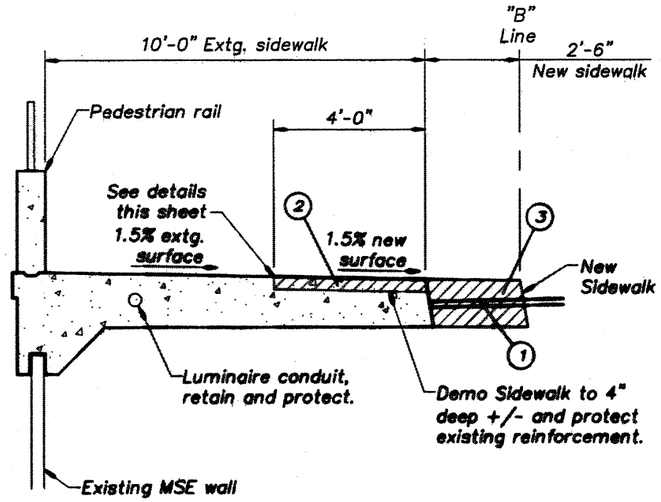

PARTIAL SECTION

Scale: ½" = 1'-0"

NOTES:

1. Remove extg. ACWS as required.
2. Partial demolition of extg. walk.
3. Construct new walk. See details this sheet.

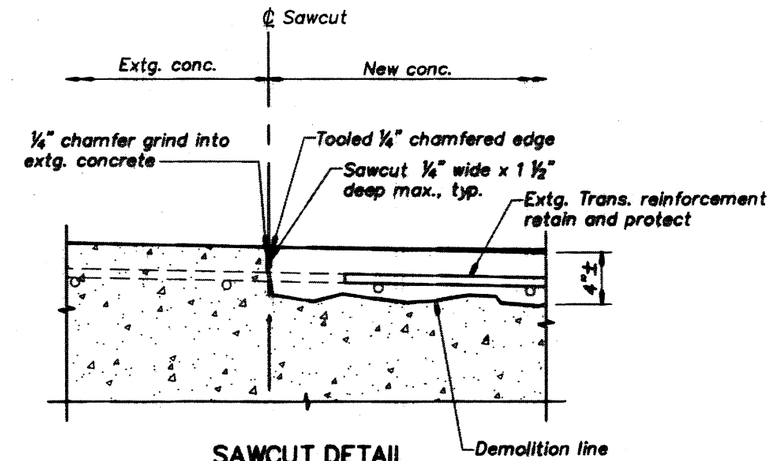

SAWCUT DETAIL

Scale: 1" = 2'-0"

Notes:

1. Demolish concrete with hydro demolition or hand operated techniques, retain and protect extg. transverse reinforcement.
2. Sawcut in multiple passes with tracked directional control to depth as required to achieve curved alignment.

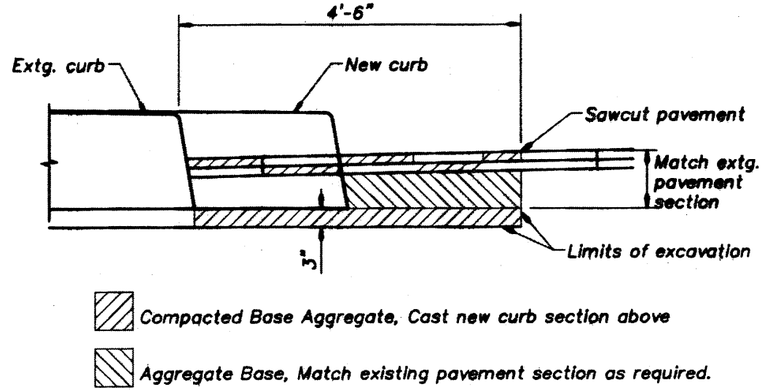

PAVEMENT REMOVAL AND REPLACEMENT DETAIL

Scale: 1" = 1'-0"

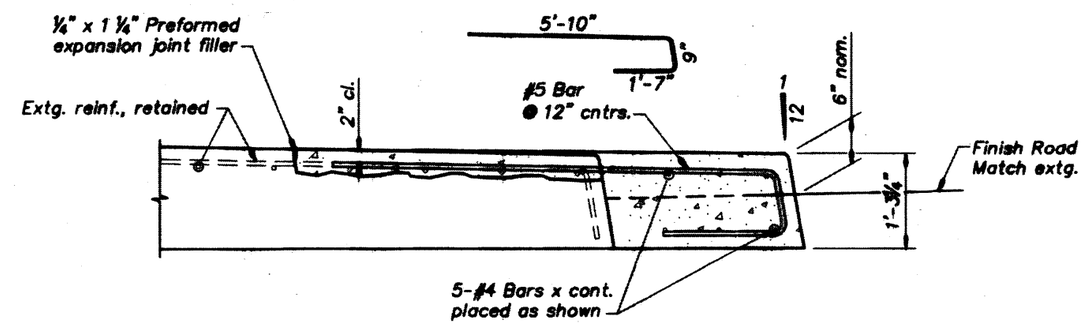

SIDEWALK REINFORCING DETAIL

Scale: 1" = 1'-0"

SCALE WARNING

If scale bar doesn't measure one inch then drawing is not to scale

△	DATE	REVISION	BY

DRAFTER: Rob Rousser
DESIGNER: Scott Nettleton
CHECKER: ---
REVIEWER: Dan Pavela

DESIGNER-RESPONSIBLE CHARGE
REGISTERED PROFESSIONAL ENGINEER 17,956 OREGON JULY 19, 1994 SCOTT M. NETTLETON
EXPIRES: 12-31-2016

OREGON DEPARTMENT OF TRANSPORTATION

TY·LIN INTERNATIONAL
engineers | planners | scientists

STRUCTURE NO. 17175
DATE Oct. 2015
CALC. BOOK ---

17TH AVE. MSE WALL
17TH AVE TRAIL: SE OCHOCO – SE MCLOUGHLIN
CITY OF MILWAUKIE, CLACKAMAS COUNTY

DETAILS

SHEET 2 OF 2
DRAWING NO. 96674

R:\500069.00_17th Ave Trail\600 CADD\1_Official\17_SHEET_02-2_TYLI_DETAILS.dwg 2/13/2014 8:58 AM

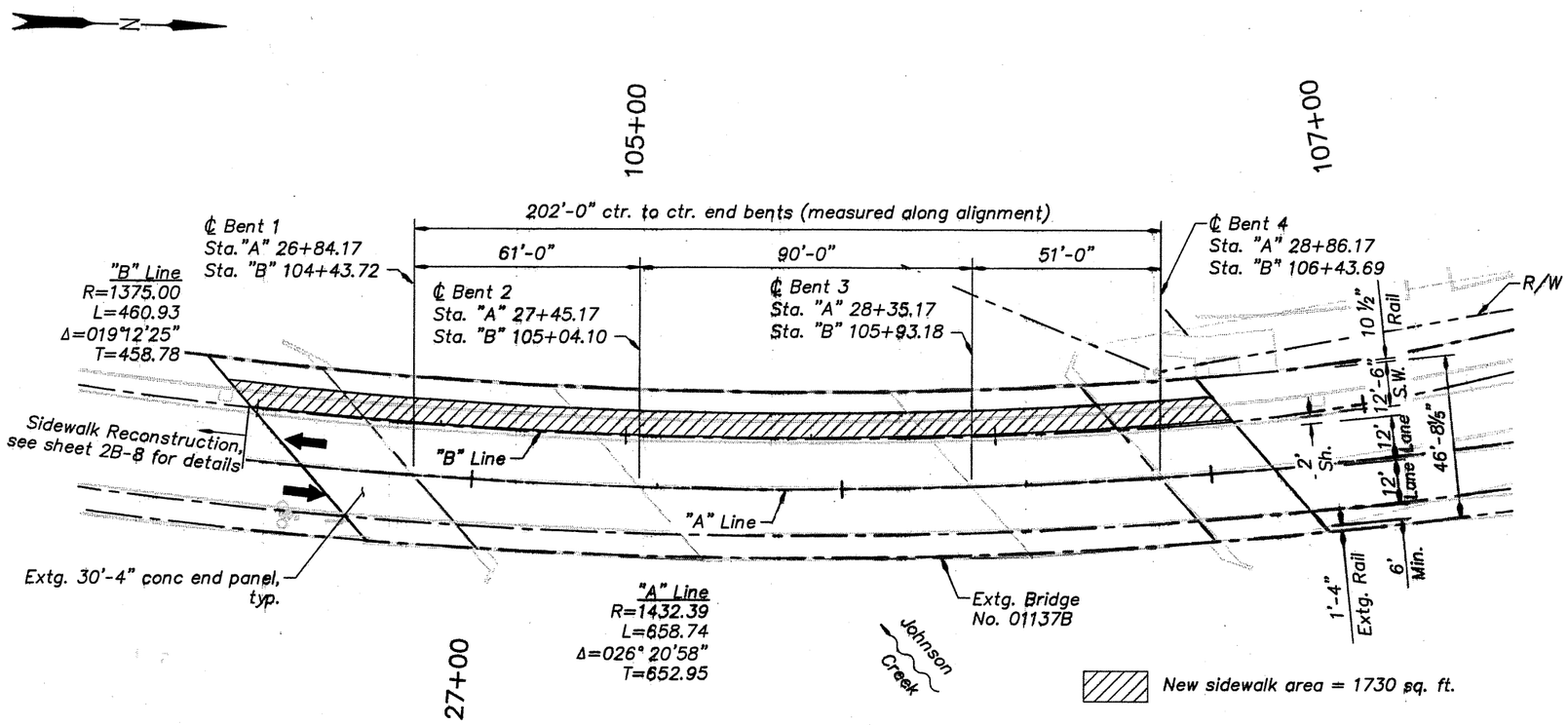

PLAN

Scale : 1" = 20'-0"

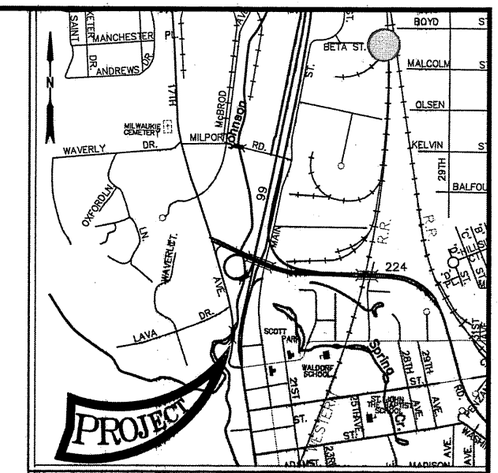

SEC. 25, 26 & 35, T. 1 S., R. 1 E., W.M.

LOCATION MAP

No Scale

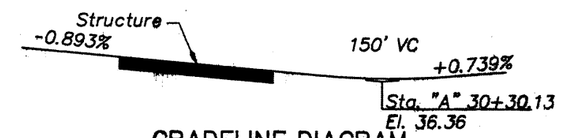

GRADELINE DIAGRAM

No Scale

General Notes:

Provide all materials and workmanship according to the Oregon Standard Specifications for Construction 2015.

Bridge modification is designed in accordance with the AASHTO LRFD Bridge Design Specifications, 7th Edition (Including 2015 Interim revisions)

Provide all reinforcing steel according to ASTM Specification A706, or AASHTO Specification M31 (ASTM A615) Grade 60

Reinforcing Splice Lengths (Class B) Grade 60 f'c = 3.3 ksi		
Bar Size	#4	#5
Uncoated	1'-4"	1'-8"

Splice reinforcing steel at alternate bars, staggered at least one splice length or as far as possible, unless shown otherwise.

Use uncoated reinforcing steel in new sidewalk construction

Place bars 2" clear of the nearest face of concrete (unless shown otherwise).

Provide Class 3300 - 1 or ¾ concrete for all concrete.

SCALE WARNING

If scale bar doesn't measure one inch then drawing is not to scale

R:\500069.00_17th Ave Trail\600 CADD\1_Official\17_SHEET_01-1_TYLL_PLAN.dwg 2/13/2014 8:56 AM

	DATE	REVISION	BY

DRAFTER: Rob Rousser
DESIGNER: Scott Nettleton
CHECKER: ---
REVIEWER: Daniel Pavela

DESIGNER-RESPONSIBLE CHARGE
REGISTERED PROFESSIONAL ENGINEER 17,968 OREGON JULY 19, 1994 SCOTT M. NETTLETON
EXPIRES: 12-31-2016

OREGON DEPARTMENT OF TRANSPORTATION

T·Y·LIN INTERNATIONAL
engineers | planners | scientists

STRUCTURE NO. 01137B
DATE Oct. 2015
CALC. BOOK ---

JOHNSON CREEK (17TH AVE.) BRIDGE
17TH AVE TRAIL: SE OCHOCO – SE MCLOUGHLIN
CITY OF MILWAUKIE, CLACKAMAS COUNTY

PLAN

SHEET 1 OF 2

DRAWING NO. 96675

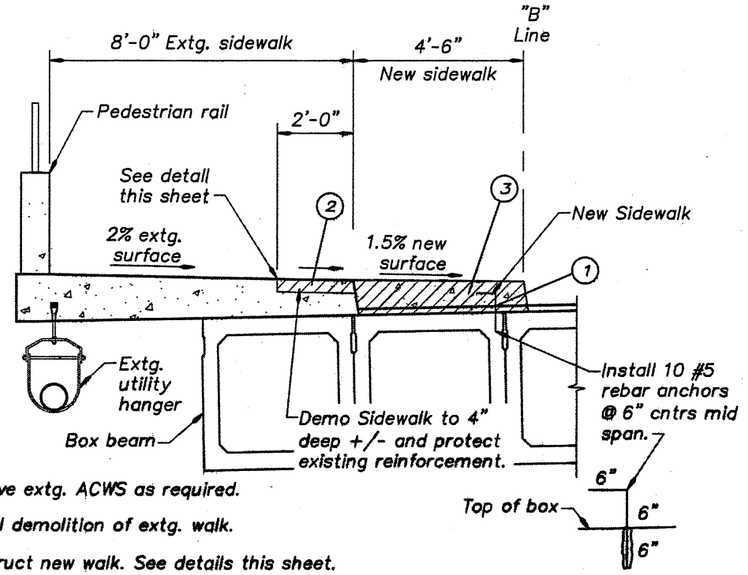

NOTES:

1. Remove extg. ACWS as required.
2. Partial demolition of extg. walk.
3. Construct new walk. See details this sheet.

PARTIAL SECTION

Scale: ½" = 1'-0"

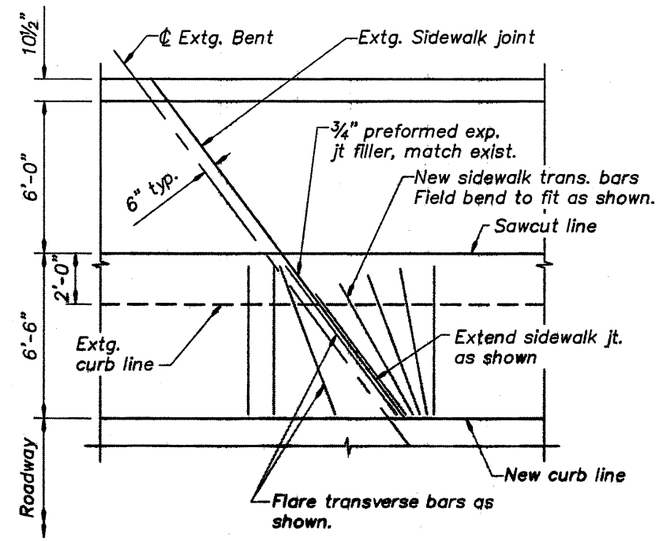

SIDEWALK JOINT DETAIL

Scale: 1" = 4'-0"

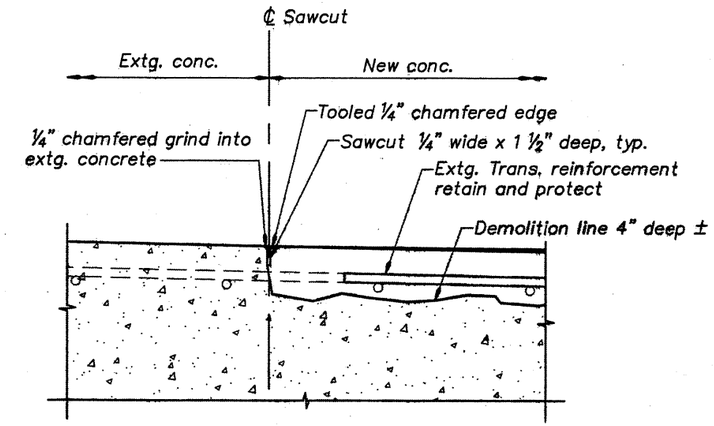

Note: Demolish concrete with hydro demolition or hand operated techniques, retain and protect extg. transverse reinforcement.

SAWCUT DETAIL

Scale: 1" = 2'-0"

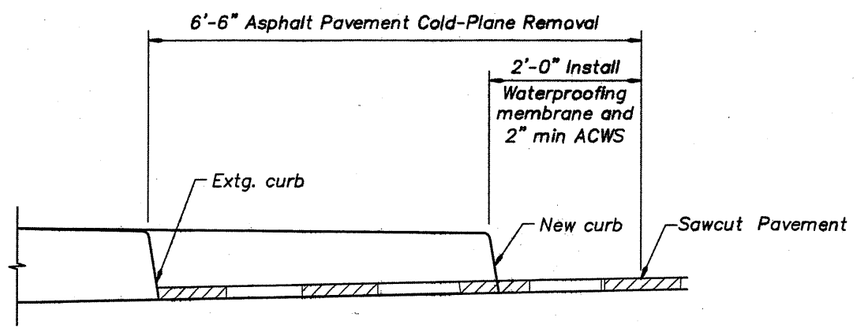

PAVEMENT REMOVAL AND REPLACEMENT DETAIL

Scale: 1" = 1'-0"

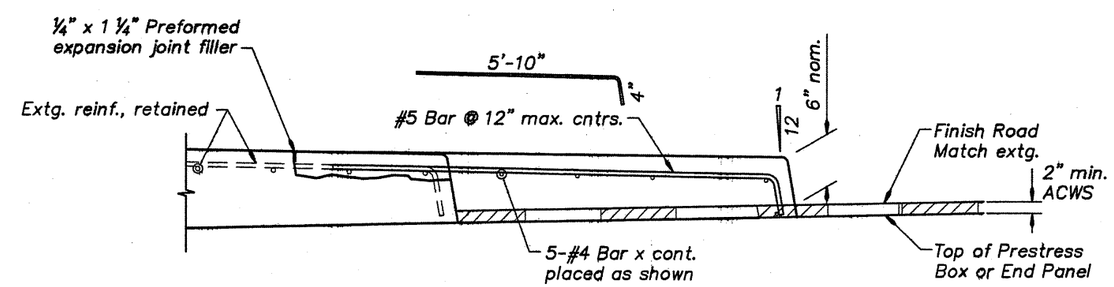

SIDEWALK REINFORCING DETAIL

Scale: 1" = 1'-0"

SCALE WARNING

If scale bar doesn't measure one inch then drawing is not to scale

DATE	REVISION	BY

DRAFTER: Rob Rousser
DESIGNER: Scott Nettleton
CHECKER: ---
REVIEWER: Dan Pavela

DESIGNER-RESPONSIBLE CHARGE: REGISTERED PROFESSIONAL ENGINEER 17,002 OREGON JULY 10, 1984 SCOTT M. NETTLETON
EXPIRES: 12-31-2016

OREGON DEPARTMENT OF TRANSPORTATION

TY·LIN INTERNATIONAL
engineers | planners | scientists

STRUCTURE NO. 011378
DATE Oct. 2015
CALC. BOOK ---

JOHNSON CREEK (17TH AVE.) BRIDGE
17TH AVE TRAIL: SE OCHOCO – SE MCLOUGHLIN
CITY OF MILWAUKIE, CLACKAMAS COUNTY

DETAILS

SHEET 2 OF 2
DRAWING NO. 96676

R:\500069.00_17th Ave Trail\600 CADD\1_Official\17_SHEET_01-2_TYLI_DETAILS.dwg 2/13/2014 8:56 AM

L E G E N D

- (E-LSA) Inst. elongated left turn straight arrow (white)
- (E-RA) Inst. elongated right turn arrow (white)
- (W) Inst. 4" white line
- (W-2) Inst. 8" white line
- (D) Inst. double no-pass
- (ND) Inst. narrow double no-pass
- (CW-SC2) Inst. staggered continental crosswalk 1ft white bars
- (E-LA) Inst. elongated left turn arrow (white)
- (CW) Inst. standard crosswalk
- (CW-SC) Inst. staggered continental crosswalk
- (WD-2) Inst. 8" white dotted line
- (S) Inst. 12" white stop bar
- (BS) Inst. bike marking (white)
- (RR) Inst. railroad crossing marking (white)
- (CH-BS) Inst. white chevron bars for buffered bike lane
- (YLD) Inst. yield line (white)

STANDARD DRAWINGS

- ■ TM500 Pavement Marking Standard Detail Blocks
- ■ TM501 Pavement Marking Standard Detail Blocks
- □ TM502 Pavement Marking Standard Detail Blocks
- ■ TM503 Pavement Marking Standard Detail Blocks
- ■ TM505 Rail Crossing Pavement Markings
- □ TM515 Pavement Markers
- □ TM516 Raised Pavement Markers: Freeway Median Crossover
- □ TM517 Recessed Pavement Markers
- ■ TM520 Durable Pavement Markings Method 'A' Extruded Surface Installed Profiled
- □ TM521 Durable Pavement Markings Method 'A' & Method B Surface & Groove Installed Non-Profiled
- □ TM523 Durable Pavement Markings Method 'D' Wet Weather Profiled & Non-Profiled
- □ TM525 High Performance Markings Modified Urethane Protected Inlaid
- ■ TM530 Intersection Pavement Markings (Crosswalk, Stop Bar & Bike Lane Stencil)
- ■ TM531 Turn Arrow Marking Details
- ■ TM539 Traversable Median Details
- □ TM547 Freeway Entrance Ramp Pavement Markings
- □ TM551 Freeway Exit Ramp Pavement Markings
- ■ TM560 Alignment Layout: General
- ■ TM561 Alignment Layout: Left Turn Lane, Centerline & Medians

GENERAL NOTES:

1. All standard crosswalk, arrow pavement markings, staggered continental crosswalk, and bike lane stencil pavement markings shall be type "B-HS" preformed, fused thermoplastic film high skid pavement marking material.

2. All longitudinal pavement markings shall be paint unless otherwise noted.

3. For details not shown, see TM500 series of the Oregon Standard Drawings.

4. Dimensions shown are approximate. All pavement markings shall be approved in the field by the Engineer.

5. Remove all existing striping that conflicts with this plan. Existing striping shall be ground off as directed by the Engineer.

(CW-SC2)

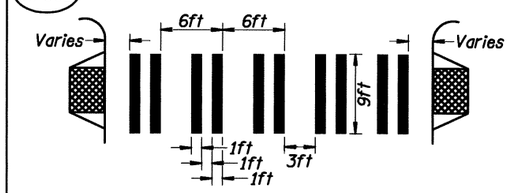

STAGGERED CONTINENTAL CROSSWALK
1 ft WHITE BARS
Install per Standard Drawing TM530

(CH-BS) Direction of motor vehicle travel

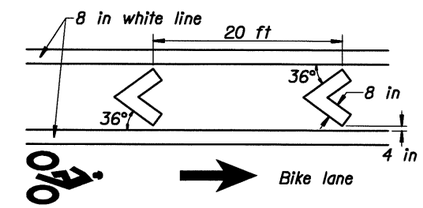

DETAIL OF CHEVRON BARS - BUFFER SPACE

REGISTERED PROFESSIONAL ENGINEER 87558 OREGON DECEMBER 17, 2014 KRISTEN A. SVICAROVICH

EXPIRES: JUNE 30, 2016

OREGON DEPARTMENT OF TRANSPORTATION

DKS 720 SW Washington Street, Suite 500 Portland, Oregon 97205 (503) 243-3500 www.dksassociates.com

17TH AVE TRAIL: SE OCHOCO - SE MCLOUGHLIN

CITY OF MILWAUKIE

CLACKAMAS COUNTY

DESIGNED BY: K. Svicarovich
REVIEWED BY: P. Coffey
DRAWN BY: M. Zarkas
FC: N/A MP: N/A

PAVEMENT MARKING LEGEND

TSSU NO. _____ T.R.S. DWG. NO. ST

PAVEMENT MARKING PLAN
STA. 22+00 TO 24+90

49V-026

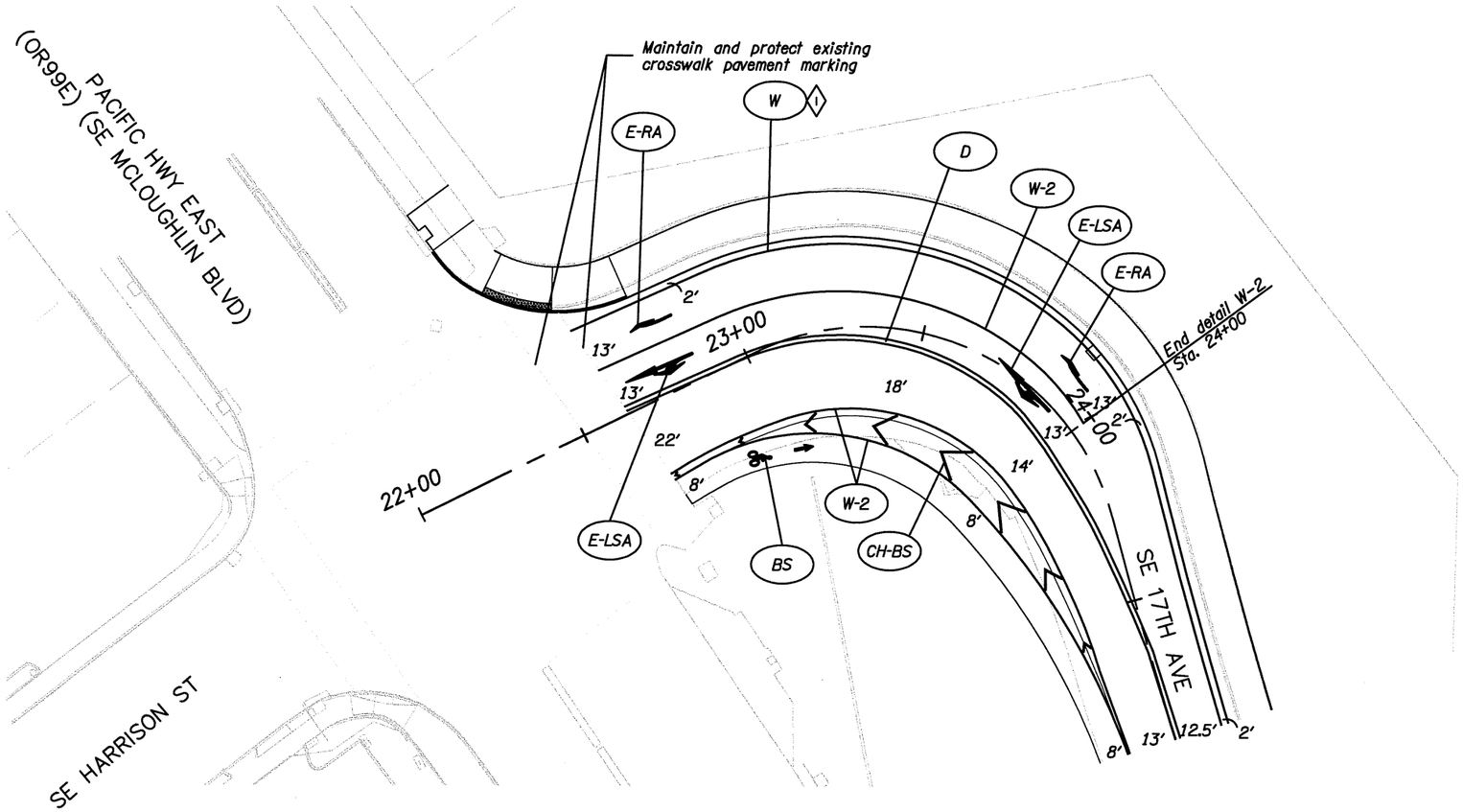

Construction Notes:

1. Longitudinal pavement marking shall be Method "A" extruded surface installed profiled.

REGISTERED PROFESSIONAL ENGINEER
87558
OREGON
DECEMBER 17, 2014
KRISTEN A. SVICAROVICH
EXPIRES: JUNE 30, 2016

OREGON DEPARTMENT OF TRANSPORTATION

DKS 720 SW Washington Street, Suite 500 Portland, Oregon 97205 (503) 243-3500 www.dksassociates.com

17TH AVE TRAIL: SE OCHOCO - SE MCLOUGHLIN
CITY OF MILWAUKIE
CLACKAMAS COUNTY

DESIGNED BY: K. Svicarovich
REVIEWED BY: P. Coffey
DRAWN BY: M. Zarkas
FC: N/A MP: N/A

PAVEMENT MARKING PLAN

TSSU NO. _____ T.R.S. DWG. NO. ST-2

X:\Projects\2014\P14081-000 (Milwaukie 17th Av Trail)\ACAD\ ST-02.dwg

49V-026

PAVEMENT MARKING PLAN
STA. 24+90 TO 29+40

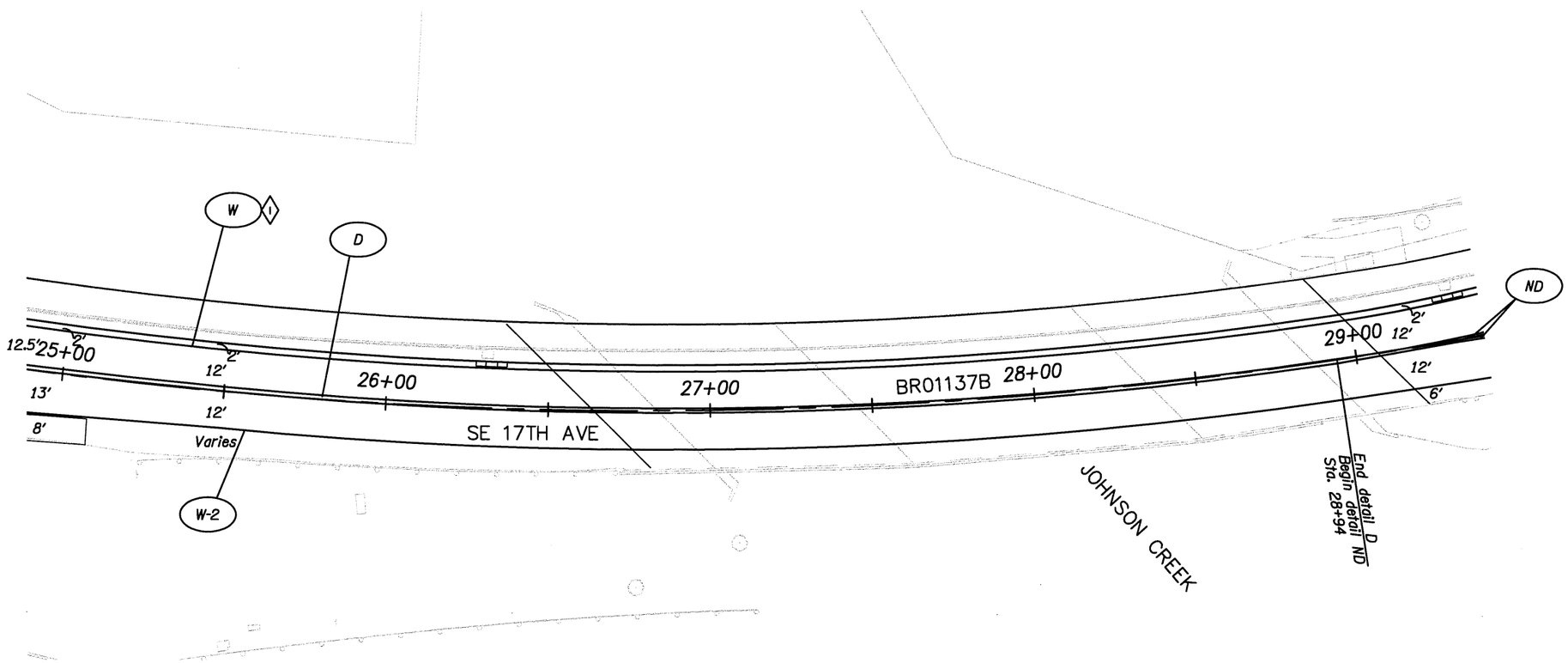

Construction Notes:

1. *Longitudinal pavement marking shall be Method "A" extruded surface installed profiled.*

REGISTERED PROFESSIONAL ENGINEER 87558 OREGON DECEMBER 17, 2014 KRISTEN A. SVICAROVICH

EXPIRES: JUNE 30, 2016

OREGON DEPARTMENT OF TRANSPORTATION

DKS 720 SW Washington Street, Suite 500 Portland, Oregon 97205 (503) 243-3500 www.dksassociates.com

17TH AVE TRAIL: SE OCHOCO - SE MCLOUGHLIN

CITY OF MILWAUKIE

CLACKAMAS COUNTY

DESIGNED BY: K. Svicarovich
REVIEWED BY: P. Coffey
DRAWN BY: M. Zarkas
FC: N/A MP: N/A

PAVEMENT MARKING PLAN

TSSU NO. _____ T.R.S. DWG. NO. ST-3

X:\Projects\2014\P14081-000 (Milwaukie 17th Av Trail)\ACAD\ ST-03.dwg

PAVEMENT MARKING PLAN
STA. 29+40 TO 34+40

49V-026

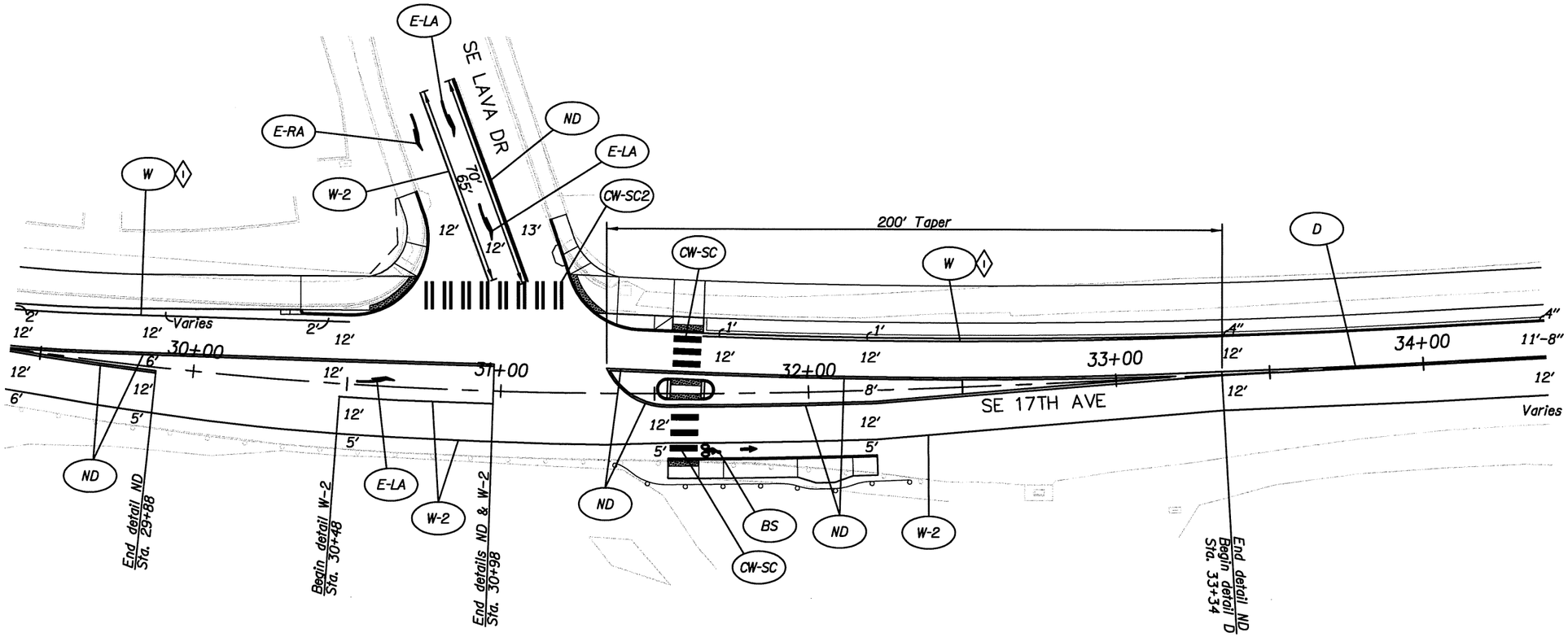

Construction Notes:

1. Longitudinal pavement marking shall be Method "A" extruded surface installed profiled.

OREGON DEPARTMENT OF TRANSPORTATION

DKS 720 SW Washington Street, Suite 500 Portland, Oregon 97205 (503) 243-3500 www.dksassociates.com

REGISTERED PROFESSIONAL ENGINEER 87558 OREGON DECEMBER 17, 2014 KRISTEN A. SVICAROVICH

EXPIRES: JUNE 30, 2016

17TH AVE TRAIL: SE OCHOCO - SE MCLOUGHLIN

CITY OF MILWAUKIE

CLACKAMAS COUNTY

DESIGNED BY: K. Svicarovich
REVIEWED BY: P. Coffey
DRAWN BY: M. Zarkas
FC: N/A MP: N/A

PAVEMENT MARKING PLAN

TSSU NO. _____ T.R.S. DWG. NO. ST-4

X:\Projects\2014\P14081-000 (Milwaukie 17th Av Trail)\ACAD\ ST-04.dwg

PAVEMENT MARKING PLAN
STA. 34+40 TO 39+45

49V-026

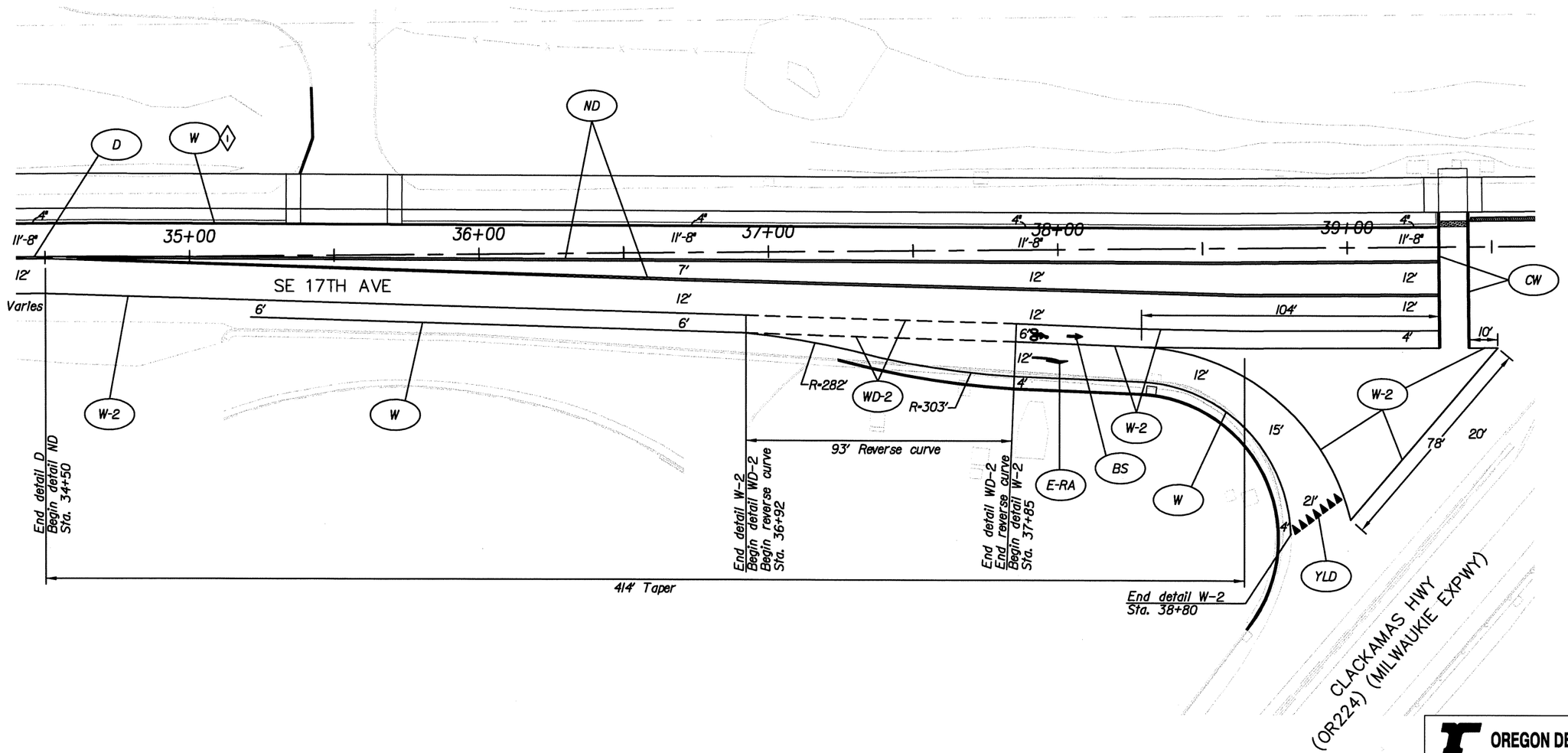

Construction Notes:

1. Longitudinal pavement marking shall be Method "A" extruded surface installed profiled.

OREGON DEPARTMENT OF TRANSPORTATION

DKS
720 SW Washington Street, Suite 500
Portland, Oregon 97205
(503) 243-3500
www.dksassociates.com

REGISTERED PROFESSIONAL ENGINEER
87558
OREGON
DECEMBER 17, 2014
KRISTEN A. SVICAROVICH
EXPIRES: JUNE 30, 2016

17TH AVE TRAIL: SE OCHOCO - SE MCLOUGHLIN
CITY OF MILWAUKIE
CLACKAMAS COUNTY

DESIGNED BY: K. Svicarovich
REVIEWED BY: P. Coffey
DRAWN BY: M. Zarkas
FC: N/A MP: N/A

PAVEMENT MARKING PLAN

TSSU NO. _____ T.R.S. DWG. NO. ST-5

X:\Projects\2014\P14081-000 (Milwaukie 17th Av Trail)\ACAD\ ST-05.dwg

PAVEMENT MARKING PLAN
STA. 39+45 TO 44+45

49V-026

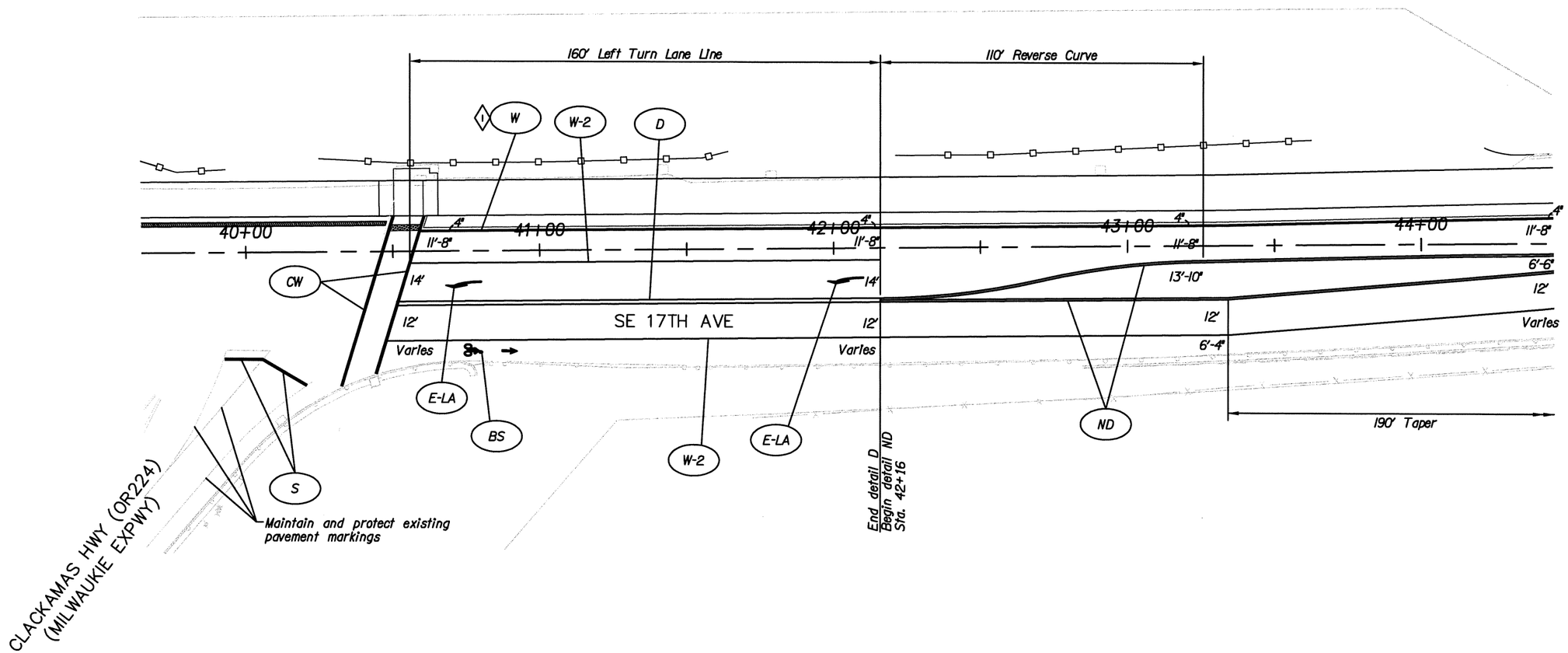

Construction Notes:

1. Longitudinal pavement marking shall be Method "A" extruded surface installed profiled.

REGISTERED PROFESSIONAL ENGINEER 87558 OREGON DECEMBER 17, 2014 KRISTEN A. SVICAROVICH

EXPIRES: JUNE 30, 2016

OREGON DEPARTMENT OF TRANSPORTATION

DKS 720 SW Washington Street, Suite 500 Portland, Oregon 97205 (503) 243-3500 www.dksassociates.com

17TH AVE TRAIL: SE OCHOCO - SE MCLOUGHLIN
CITY OF MILWAUKIE
CLACKAMAS COUNTY

DESIGNED BY: K. Svicarovich
REVIEWED BY: P. Coffey
DRAWN BY: M. Zarkas
FC: N/A MP: N/A

PAVEMENT MARKING PLAN

TSSU NO. _____ T.R.S. DWG. NO. ST-6

X:\Projects\2014\P14081-000 (Milwaukie 17th Av Trail)\ACAD\ ST-06.dwg

PAVEMENT MARKING PLAN
STA. 44+45 TO 49+45

49V-026

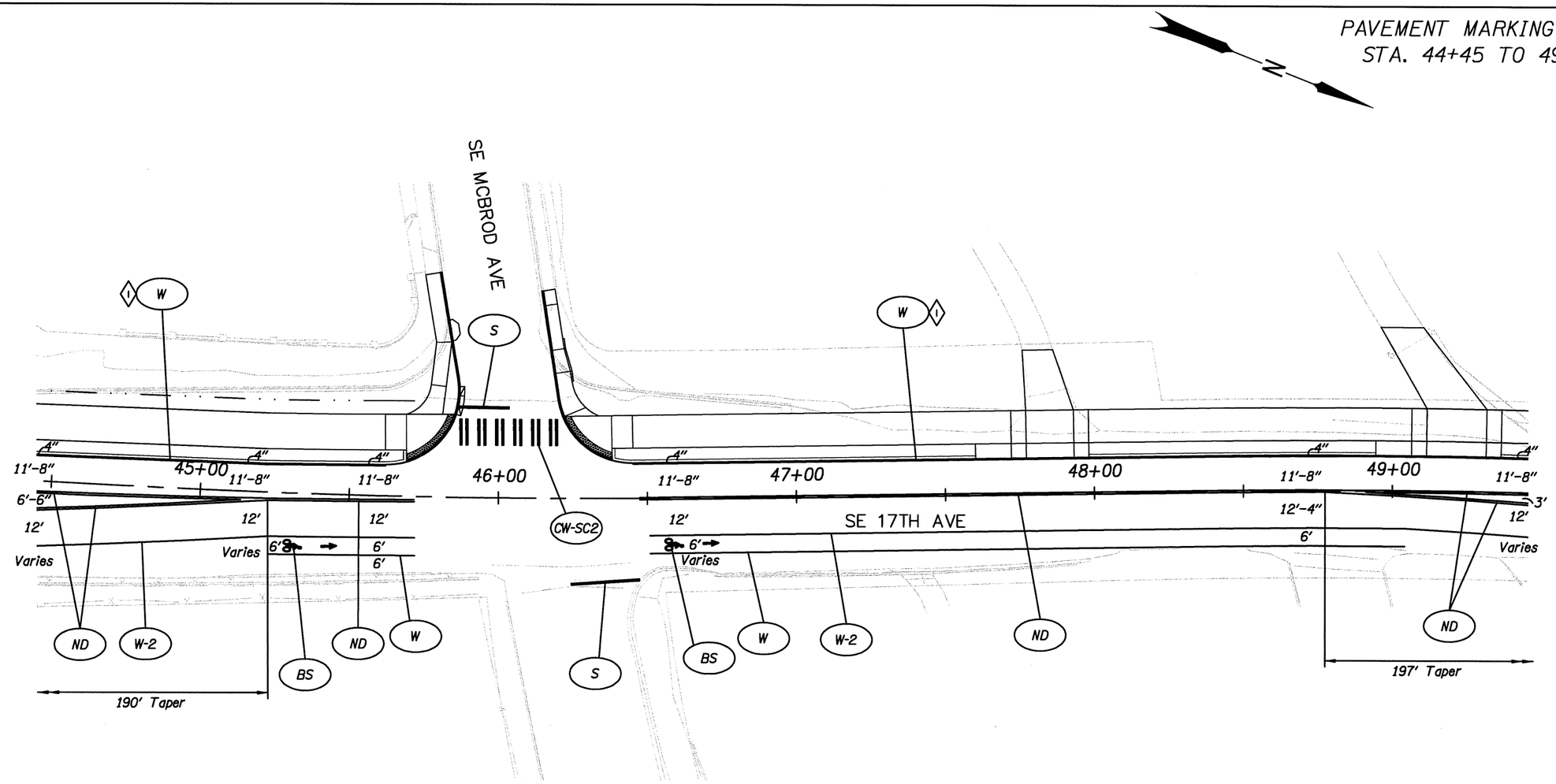

Construction Notes:

1. Longitudinal pavement marking shall be Method "A" extruded surface installed profiled.

REGISTERED PROFESSIONAL ENGINEER 87558 OREGON DECEMBER 17, 2014 KRISTEN A. SVICAROVICH

EXPIRES: JUNE 30, 2016

OREGON DEPARTMENT OF TRANSPORTATION

DKS 720 SW Washington Street, Suite 500 Portland, Oregon 97205 (503) 243-3500 www.dksassociates.com

17TH AVE TRAIL: SE OCHOCO - SE MCLOUGHLIN

CITY OF MILWAUKIE

CLACKAMAS COUNTY

DESIGNED BY: K. Svicarovich
REVIEWED BY: P. Coffey
DRAWN BY: M. Zarkas
FC: N/A MP: N/A

PAVEMENT MARKING PLAN

TSSU NO. _____ T.R.S. DWG. NO. ST-7

X:\Projects\2014\P14081-000 (Milwaukie 17th Av Trail)\ACAD\ ST-07.dwg

PAVEMENT MARKING PLAN
STA. 49+45 TO 54+40

49V-026

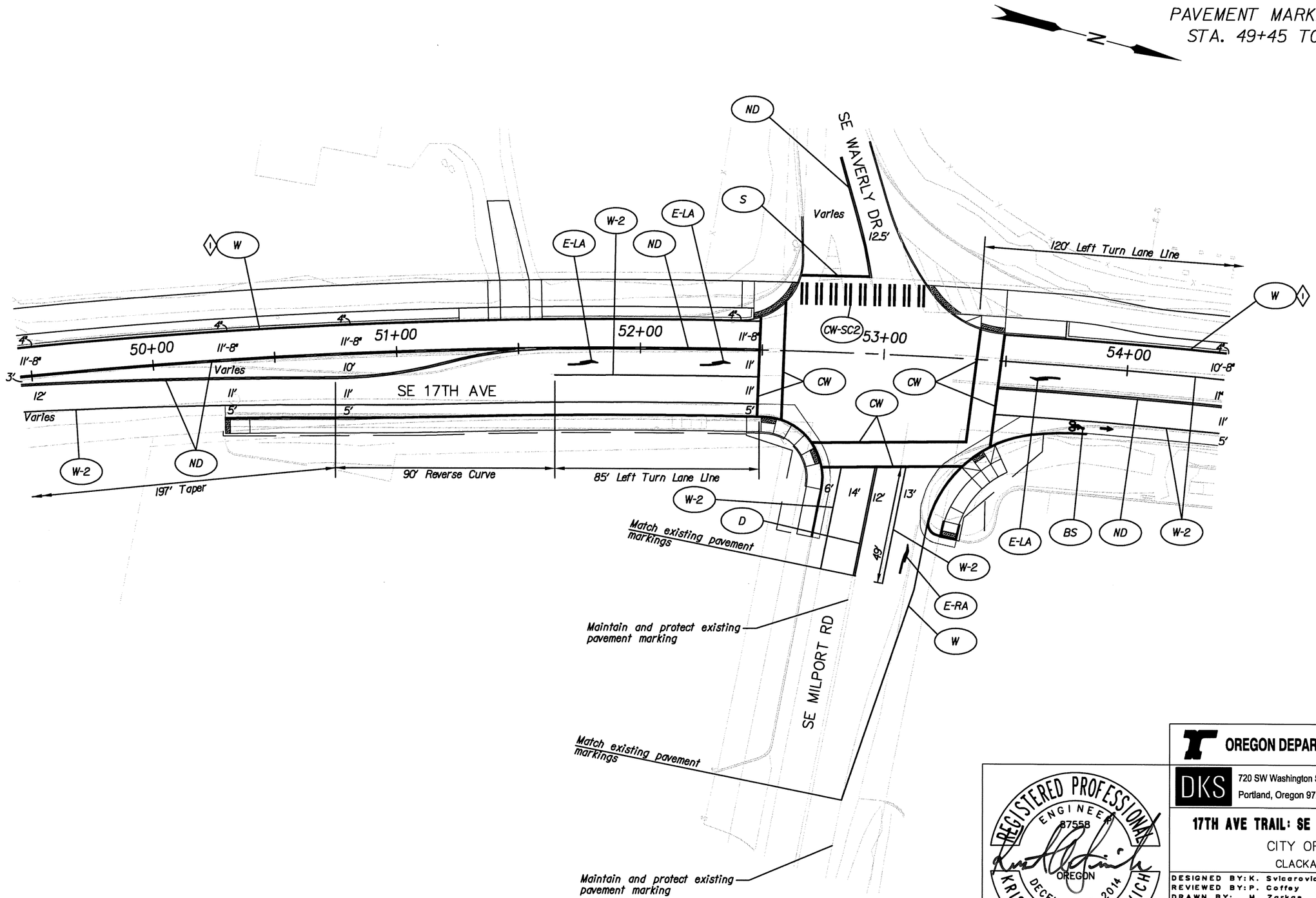

Construction Notes:

1. Longitudinal pavement marking shall be Method "A" extruded surface installed profiled.

REGISTERED PROFESSIONAL ENGINEER
87558
OREGON
DECEMBER 17, 2014
KRISTEN A. SVICAROVICH
EXPIRES: JUNE 30, 2016

OREGON DEPARTMENT OF TRANSPORTATION

DKS
720 SW Washington Street, Suite 500
Portland, Oregon 97205
(503) 243-3500
www.dksassociates.com

17TH AVE TRAIL: SE OCHOCO - SE MCLOUGHLIN
CITY OF MILWAUKIE
CLACKAMAS COUNTY

DESIGNED BY: K. Svicarovich
REVIEWED BY: P. Coffey
DRAWN BY: M. Zarkos
FC: N/A MP: N/A

PAVEMENT MARKING PLAN

TSSU NO. _____ T.R.S. DWG. NO. ST-8

X:\Projects\2014\P14081-000 (Milwaukie 17th Av Trail)\ACAD\ ST-08.dwg

PAVEMENT MARKING PLAN
STA. 54+40 TO 59+40

49V-026

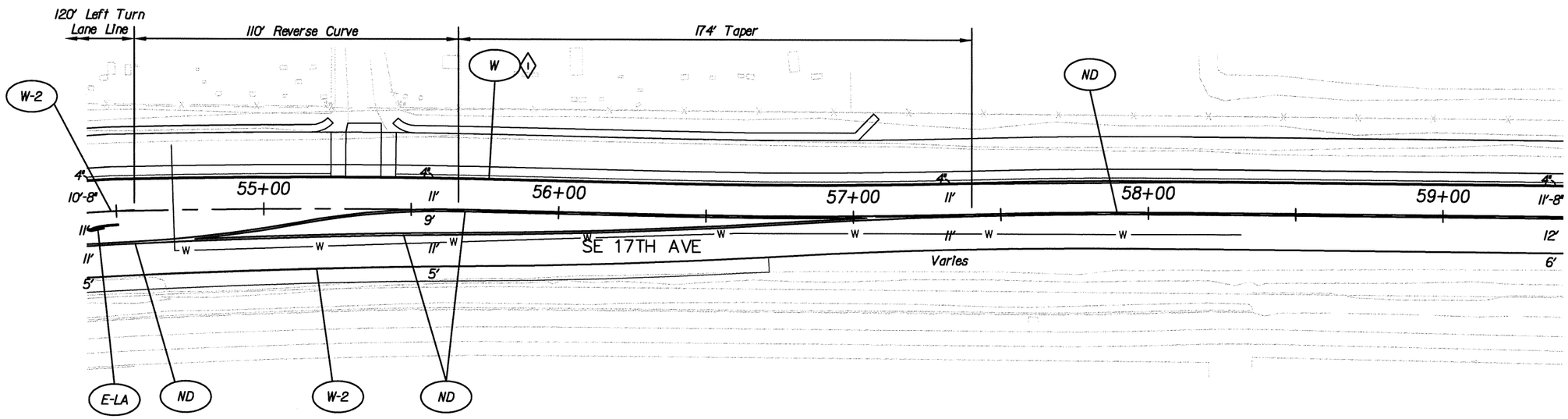

Construction Notes:

1. Longitudinal pavement marking shall be Method "A" extruded surface installed profiled.

REGISTERED PROFESSIONAL ENGINEER
87558
OREGON
DECEMBER 17, 2014
KRISTEN A. SVICAROVICH
EXPIRES: JUNE 30, 2016

OREGON DEPARTMENT OF TRANSPORTATION

DKS
720 SW Washington Street, Suite 500
Portland, Oregon 97205
(503) 243-3500
www.dksassociates.com

17TH AVE TRAIL: SE OCHOCO - SE MCLOUGHLIN
CITY OF MILWAUKIE
CLACKAMAS COUNTY

DESIGNED BY: K. Svicarovich
REVIEWED BY: P. Coffey
DRAWN BY: M. Zarkas
FC: N/A MP: N/A

PAVEMENT MARKING PLAN

TSSU NO. _____ T.R.S. DWG. NO. ST-9

X:\Projects\2014\P14081-000 (Milwaukie 17th Av Trail)\ACAD\ ST-09.dwg

PAVEMENT MARKING PLAN
STA. 59+40 TO 64+40

49V-026

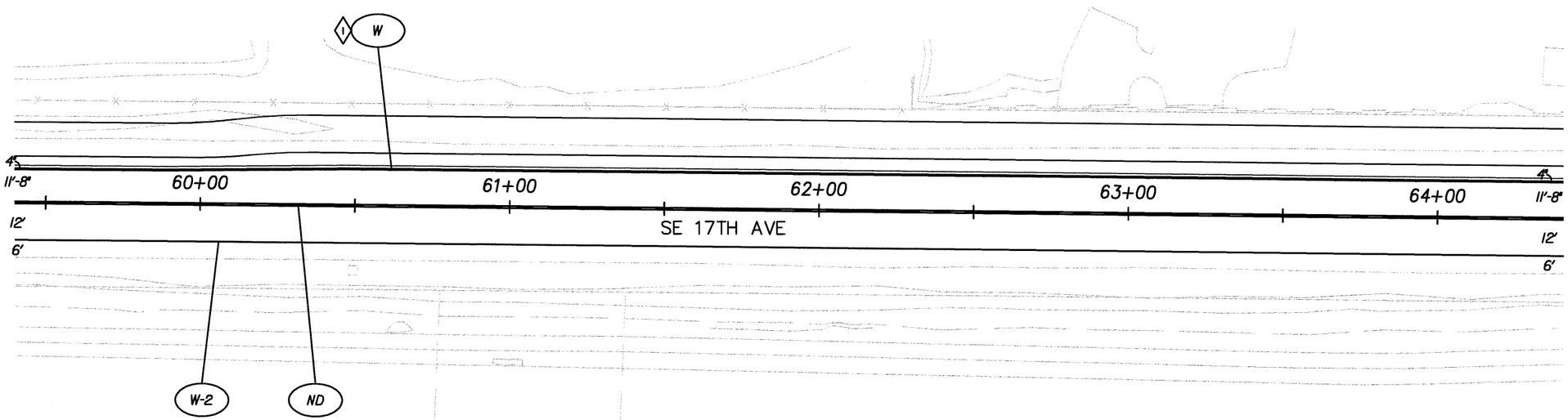

Construction Notes:

1. Longitudinal pavement marking shall be Method "A" extruded surface installed profiled.

REGISTERED PROFESSIONAL ENGINEER 87558 OREGON DECEMBER 17, 2014 KRISTEN A. SVICAROVICH

EXPIRES: JUNE 30, 2016

OREGON DEPARTMENT OF TRANSPORTATION

DKS 720 SW Washington Street, Suite 500 Portland, Oregon 97205 (503) 243-3500 www.dksassociates.com

17TH AVE TRAIL: SE OCHOCO - SE MCLOUGHLIN

CITY OF MILWAUKIE

CLACKAMAS COUNTY

DESIGNED BY: K. Svicarovich
REVIEWED BY: P. Coffey
DRAWN BY: M. Zarkas
FC: N/A MP: N/A

PAVEMENT MARKING PLAN

TSSU NO. _____ T.R.S. DWG. NO. ST-10

X:\Projects\2014\P14081-000 (Milwaukie 17th Av Trail)\ACAD\ ST-10.dwg

PAVEMENT MARKING PLAN
STA. 64+40 TO 69+00

49V-026

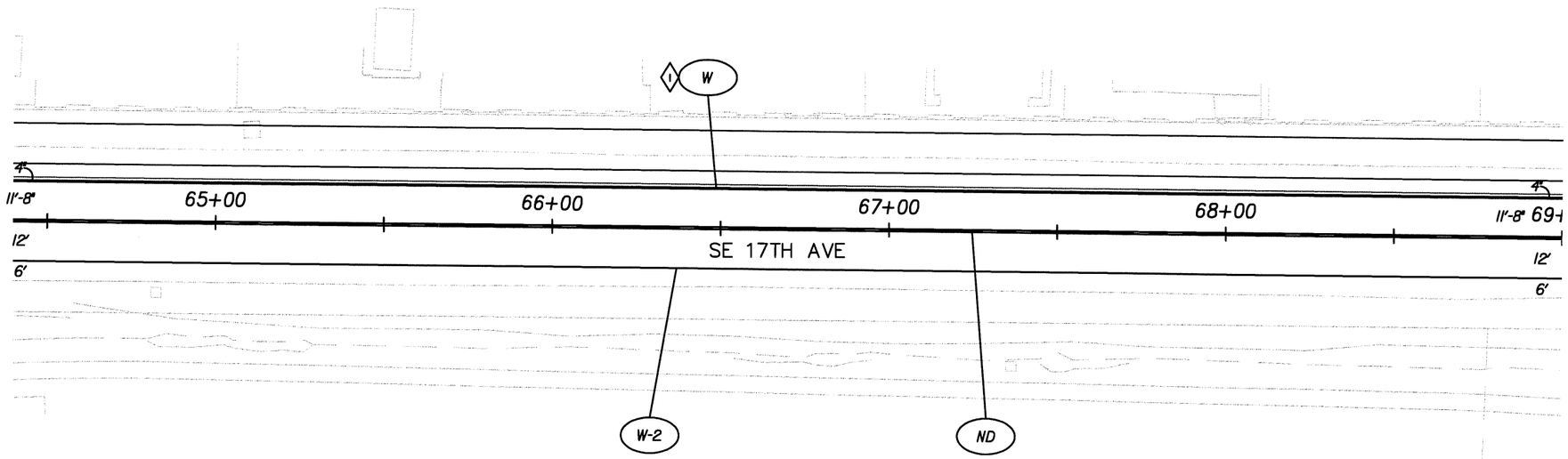

Construction Notes:

1. Longitudinal pavement marking shall be Method "A" extruded surface installed profiled.

REGISTERED PROFESSIONAL ENGINEER 87558 OREGON DECEMBER 17, 2014 KRISTEN A. SVICAROVICH

EXPIRES: JUNE 30, 2016

OREGON DEPARTMENT OF TRANSPORTATION

DKS 720 SW Washington Street, Suite 500 Portland, Oregon 97205 (503) 243-3500 www.dksassociates.com

17TH AVE TRAIL: SE OCHOCO - SE MCLOUGHLIN

CITY OF MILWAUKIE

CLACKAMAS COUNTY

DESIGNED BY: K. Svicarovich
REVIEWED BY: P. Coffey
DRAWN BY: M. Zarkas
FC: N/A MP: N/A

PAVEMENT MARKING PLAN

TSSU NO. _____ T.R.S. DWG. NO. ST-11

X:\Projects\2014\P14081-000 (Milwaukie 17th Av Trail)\ACAD\ ST-11.dwg

PAVEMENT MARKING PLAN
STA. 69+00 TO 74+30

49V-026

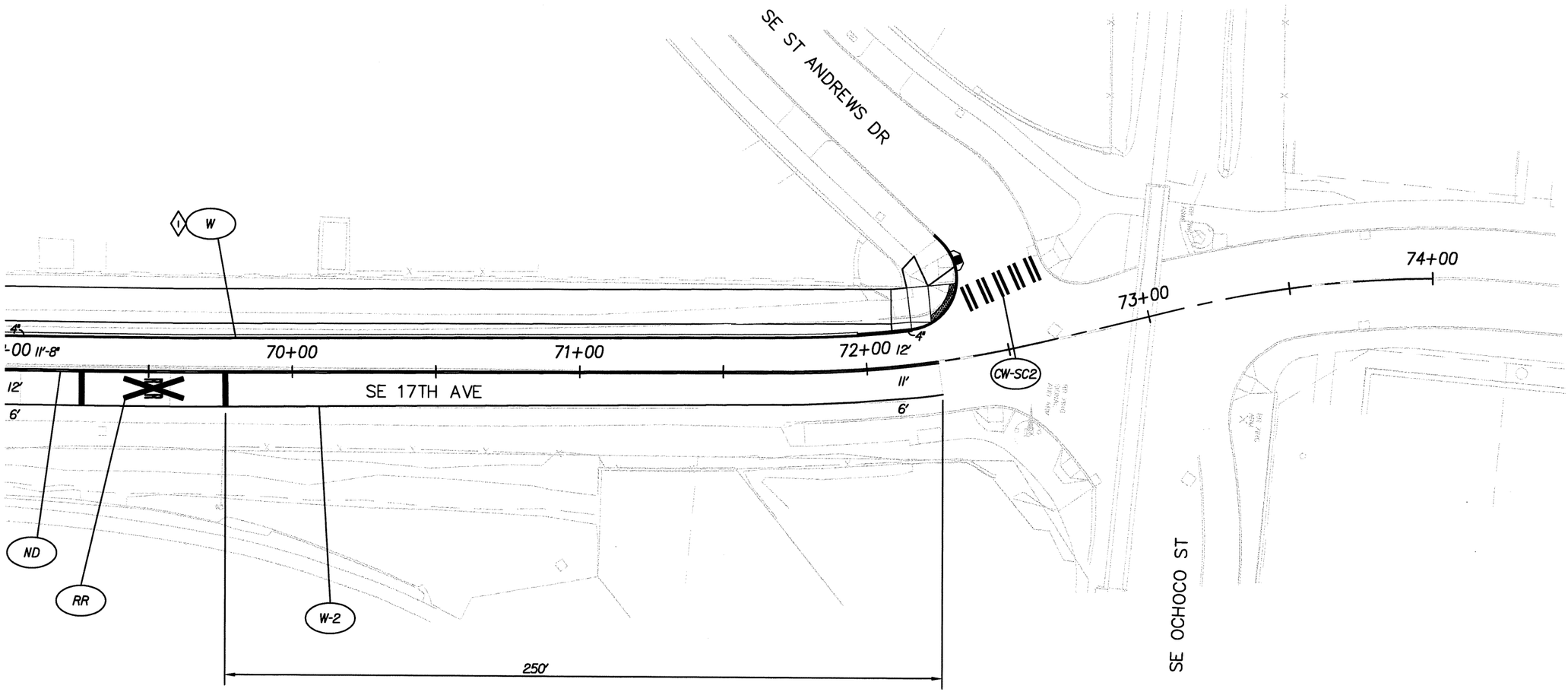

Construction Notes:

1. Longitudinal pavement marking shall be Method "A" extruded surface installed profiled.

REGISTERED PROFESSIONAL ENGINEER 87558 OREGON DECEMBER 17, 2014 KRISTEN A. SVICAROVICH

EXPIRES: JUNE 30, 2016

OREGON DEPARTMENT OF TRANSPORTATION

DKS 720 SW Washington Street, Suite 500 Portland, Oregon 97205 (503) 243-3500 www.dksassociates.com

17TH AVE TRAIL: SE OCHOCO - SE MCLOUGHLIN

CITY OF MILWAUKIE

CLACKAMAS COUNTY

DESIGNED BY: K. Svicarovich
REVIEWED BY: P. Coffey
DRAWN BY: M. Zarkas
FC: N/A MP: N/A

PAVEMENT MARKING PLAN

TSSU NO. _____ T.R.S. DWG. NO. ST-12

X:\Projects\2014\P14081-000 (Milwaukie 17th Av Trail)\ACAD\ ST-12.dwg

SIGN INSTALLATION PLAN
STA. 22+00 TO 25+00

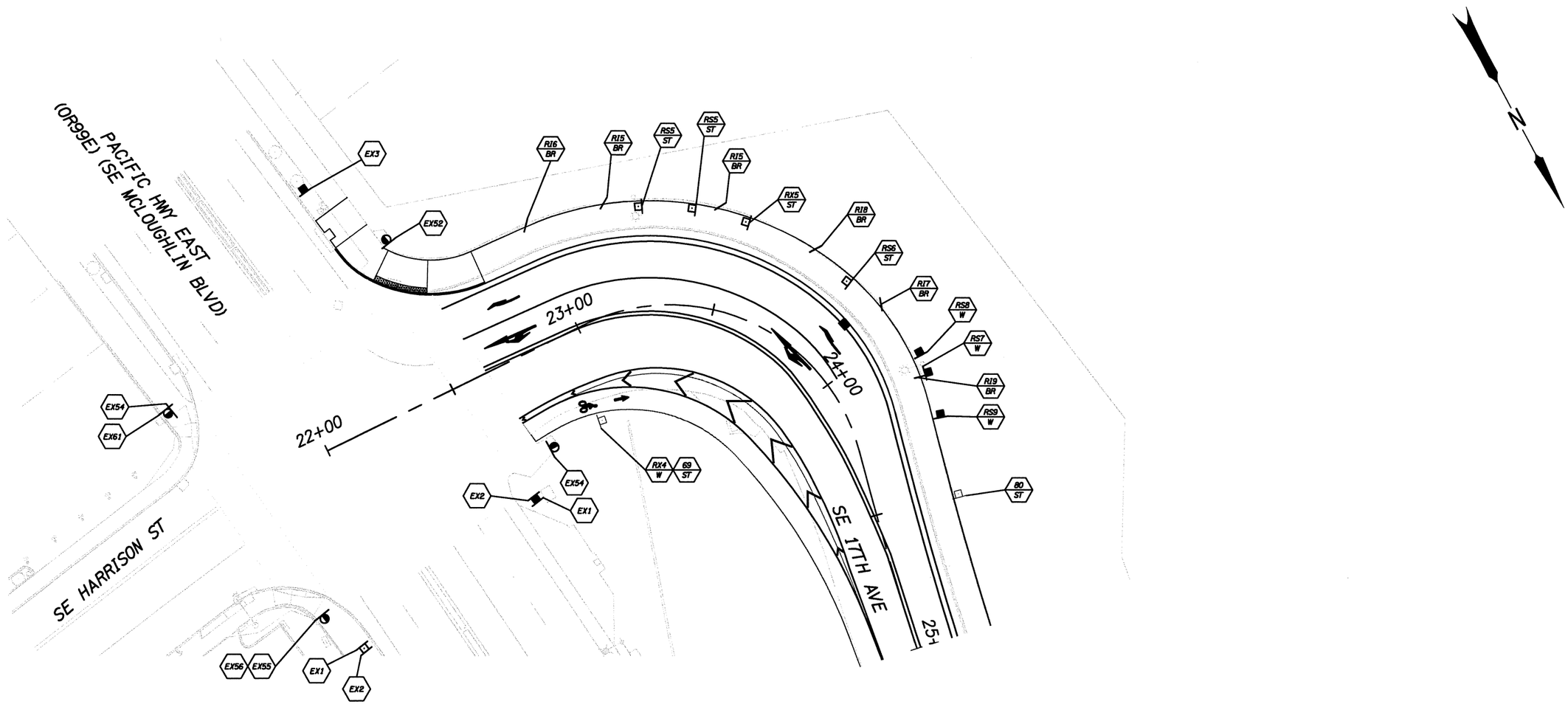

LEGEND

- EXN — Maintain and protect existing sign (N) and support.
- RSN/M — Remove and save existing sign (N) and remove (M) sign support.
- RIN/M — Reinstall existing sign (N) on new (M) sign support.
- N/M — Install new sign (N) on new (M) sign support.
- RXN/M — Remove existing sign (N) and (M) sign support.

N = Sign number
M = Material: BR = Bridge rail mount (See sheet S-00016 for detail)
ST = Perforated steel square tube sign support
W = Wood

General Notes:

1. This plan is accurate for signing only.
2. All materials and workmanship shall conform to the requirements of the Manual on Uniform Traffic Control Devices (MUTCD) 2009, the Oregon Standard Drawings, the Oregon Standard Specifications for Construction (2015), and the Special Provisions of this contract.
3. The locations of sign installations shown are approximate with exact locations to be determined in the field by the Engineer prior to installation.
4. Notify Trimet (503-661-8117) 3 working days in advance of any work adjacent to bus stops.

REGISTERED PROFESSIONAL ENGINEER 87558 OREGON DECEMBER 17, 2014 KRISTEN A. SVICAROVICH

EXPIRES: JUNE 30, 2016

OREGON DEPARTMENT OF TRANSPORTATION

DKS 720 SW Washington Street, Suite 500 Portland, Oregon 97205 (503) 243-3500 www.dksassociates.com

17TH AVE TRAIL: SE OCHOCO - SE MCLOUGHLIN
CITY OF MILWAUKIE
CLACKAMAS COUNTY

DESIGNED BY: K. Svicarovich
REVIEWED BY: P. Coffey
DRAWN BY: M. Zarkas
FC: N/A MP: N/A

PERMANENT SIGNING

ACCOMPANIED BY DWGS. TM200, TM201, TM212, TM223, TM230, TM233, TM450, TM602, TM635, TM650, TM675-TM678, TM680, TM681, TM687, TM688, and Dwgs S-00002 thru S-00019

CITY OF MILWAUKIE DWG. NO. S-00001

TSSU NO. T.R.S. DWG. NO.

SIGN INSTALLATION PLAN
STA. 25+00 TO 29+40

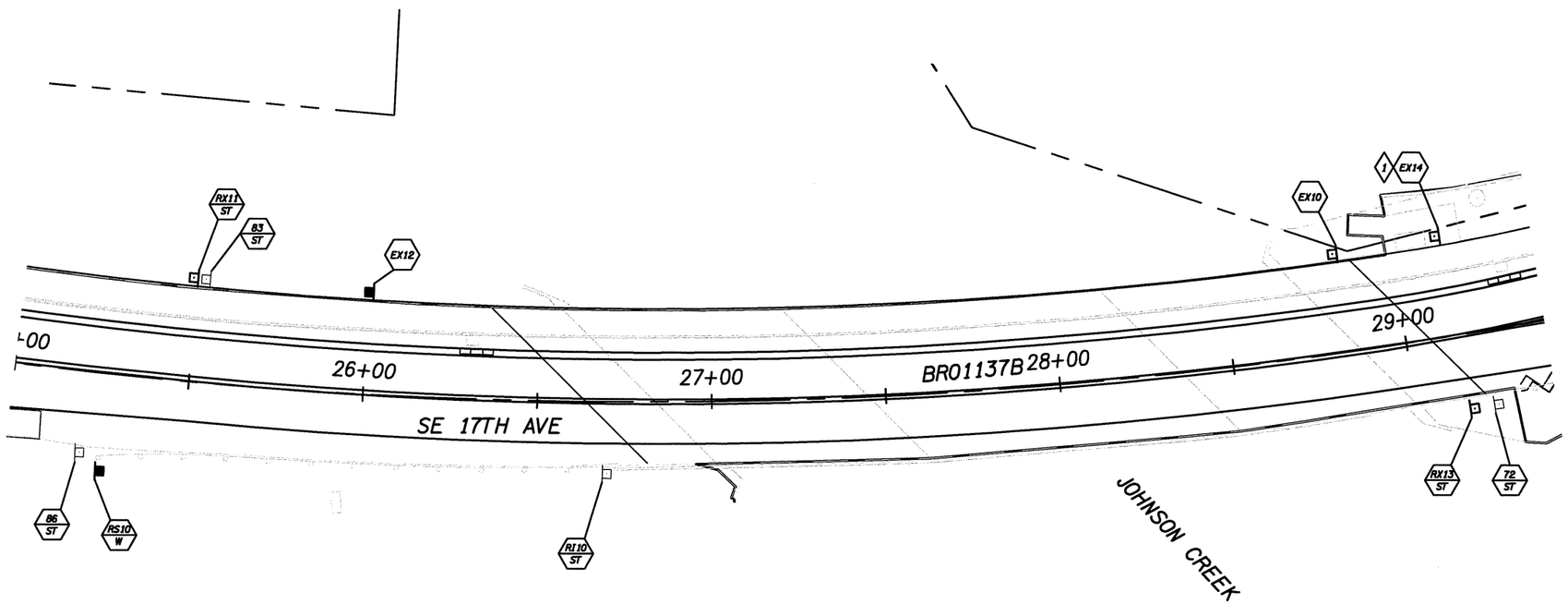

Construction Notes:

1. Contractor to coordinate with TriMet (503-661-8117) for relocation of sign.

L E G E N D

- EXN — Maintain and protect existing sign (N) and support.
- RXN M — Remove existing sign (N) and (M) sign support.
- RSN M — Remove and save existing sign (N) and remove (M) sign support.
- RIN M — Reinstall existing sign (N) on new (M) sign support.
- N M — Install new sign (N) on new (M) sign support.

N = Sign number
M = Material: ST = Perforated steel square tube sign support
W = Wood

General Notes:

1. This plan is accurate for signing only.
2. All materials and workmanship shall conform to the requirements of the Manual on Uniform Traffic Control Devices (MUTCD) 2009, the Oregon Standard Drawings, the Oregon Standard Specifications for Construction (2015), and the Special Provisions of this contract.
3. The locations of sign installations shown are approximate with exact locations to be determined in the field by the Engineer prior to installation.
4. Notify TriMet (503-661-8117) 3 working days in advance of any work adjacent to bus stops.

REGISTERED PROFESSIONAL ENGINEER 87558 OREGON DECEMBER 17, 2014 KRISTEN A. SVICAROVICH
EXPIRES: JUNE 30, 2016

OREGON DEPARTMENT OF TRANSPORTATION

DKS 720 SW Washington Street, Suite 500 Portland, Oregon 97205 (503) 243-3500 www.dksassociates.com

17TH AVE TRAIL: SE OCHOCO - SE MCLOUGHLIN
CITY OF MILWAUKIE
CLACKAMAS COUNTY

DESIGNED BY: K. Svicarovich
REVIEWED BY: P. Coffey
DRAWN BY: M. Zarkas
FC: N/A MP: N/A

PERMANENT SIGNING

CITY OF MILWAUKIE DWG. NO. S-00002
TSSU NO. _____ T.R.S. DWG. NO. _____

SIGN INSTALLATION PLAN
STA. 29+40 TO 34+40

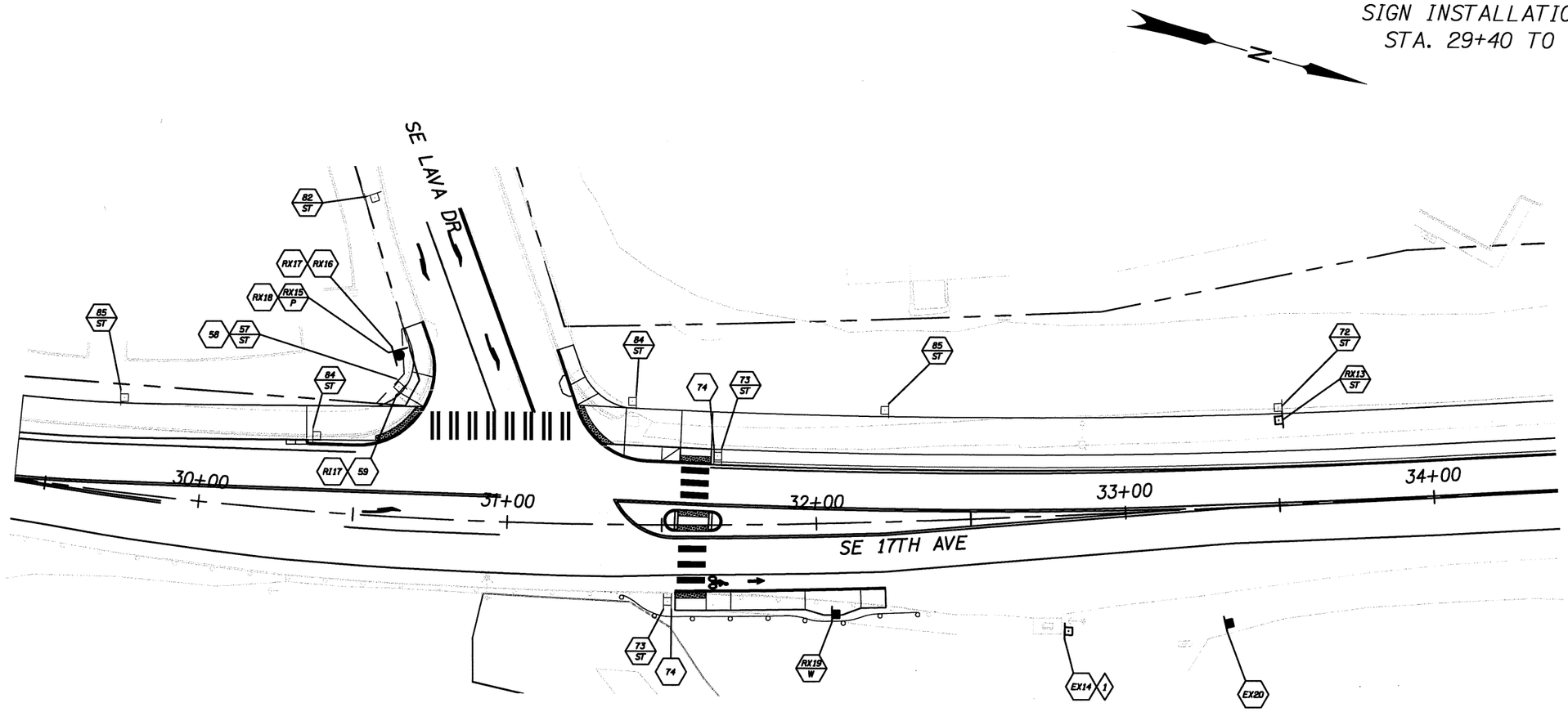

Construction Notes:

1. Contractor to coordinate with TriMet (503-661-8117) for relocation of sign.

L E G E N D

- EXN — Maintain and protect sign (N) and support.
- RXN/M — Remove existing sign (N) and (M) sign support.
- RXN — Remove existing sign (N).
- RIN — Reinstall existing sign (N).
- N/M — Install new sign (N) on new (M) sign support.
- N — Install new sign (N).

N = Sign number:
M = Material: P = Round pipe support
ST = Perforated steel square tube sign support
W = Wood

General Notes:

1. This plan is accurate for signing only.
2. All materials and workmanship shall conform to the requirements of the Manual on Uniform Traffic Control Devices (MUTCD) 2009, the Oregon Standard Drawings, the Oregon Standard Specifications for Construction (2015), and the Special Provisions of this contract.
3. The locations of sign installations shown are approximate with exact locations to be determined in the field by the Engineer prior to installation.
4. Notify Trimet (503-661-8117) 3 working days in advance of any work adjacent to bus stops.

REGISTERED PROFESSIONAL ENGINEER 87558 OREGON DECEMBER 17, 2014 KRISTEN A. SVICAROVICH

EXPIRES: JUNE 30, 2016

OREGON DEPARTMENT OF TRANSPORTATION

DKS 720 SW Washington Street, Suite 500 Portland, Oregon 97205 (503) 243-3500 www.dksassociates.com

17TH AVE TRAIL: SE OCHOCO - SE MCLOUGHLIN
CITY OF MILWAUKIE
CLACKAMAS COUNTY

DESIGNED BY: K. Svicarovich
REVIEWED BY: P. Coffey
DRAWN BY: M. Zarkas
FC: N/A MP: N/A

PERMANENT SIGNING

CITY OF MILWAUKIE DWG. NO. S-00003
TSSU NO. _____ T.R.S. DWG. NO. _____

X:\Projects\2014\P14081-000 (Milwaukie 17th Av Trail)\ACAD\ S-00003.dwg

SIGN INSTALLATION PLAN
STA. 34+40 TO 39+50

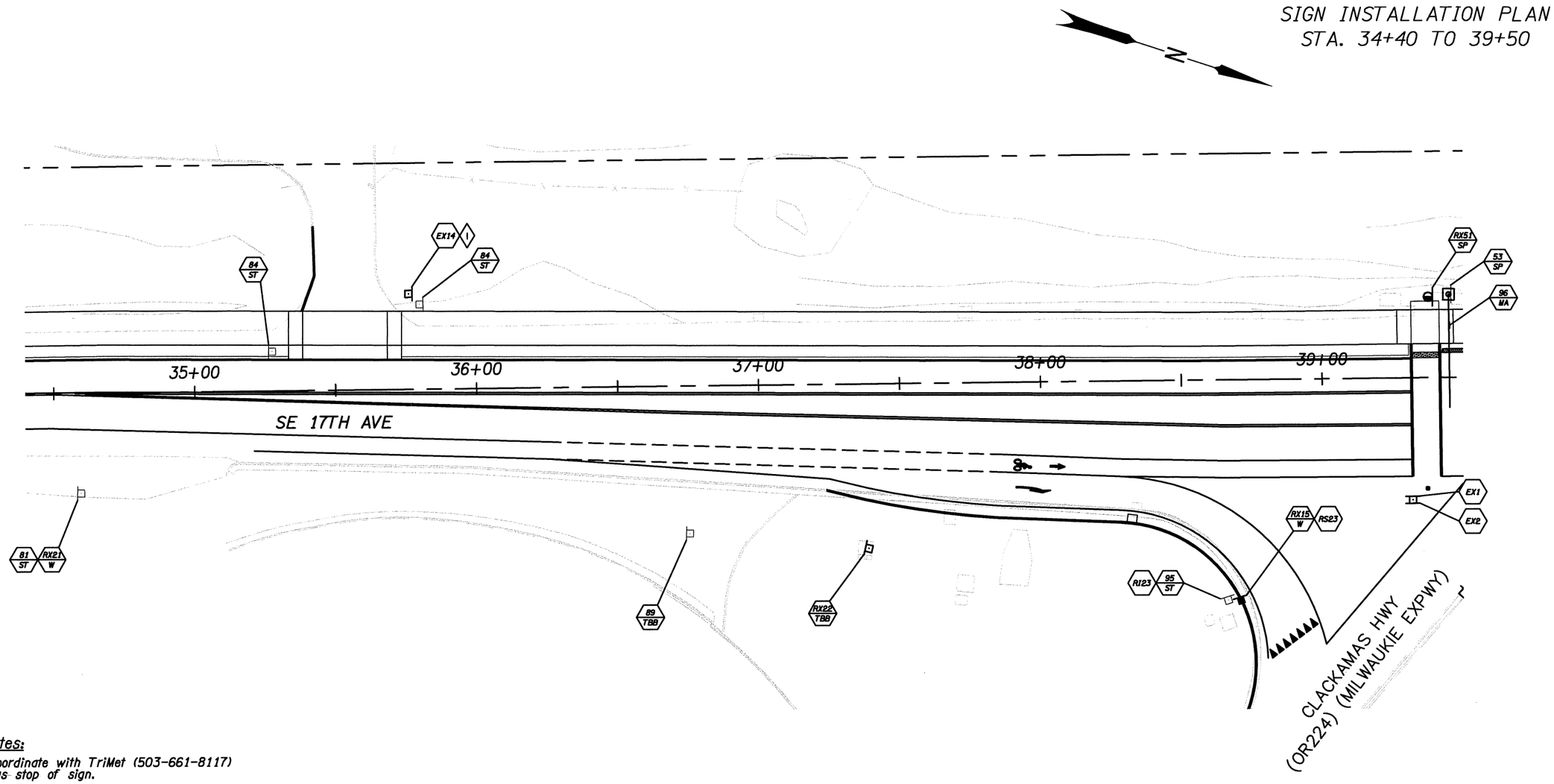

Construction Notes:

1. Contractor to coordinate with TriMet (503-661-8117) for removing bus stop of sign.

L E G E N D

- EXN — Maintain and protect sign (N) and support.
- N/M — Install new sign (N) on new (M) sign support.
- RXN/M — Remove existing sign (N) and (M) sign support.
- RSN/M — Remove and save existing sign (N) and remove (M) sign support.
- RSN — Remove and save existing sign (N).
- RIN/M — Reinstall existing sign (N) on new (M) sign support.
- RIN — Reinstall existing sign (N).

N = Sign number
M = Material:
- W = Wood
- SP = Signal pole mount
- ST = Perforated steel square tube sign support
- TBB = Trangular base breakaway
- MA = Mast arm street name sign mount

General Notes:

1. This plan is accurate for signing only.
2. All materials and workmanship shall conform to the requirements of the Manual on Uniform Traffic Control Devices (MUTCD) 2009, the Oregon Standard Drawings, the Oregon Standard Specifications for Construction (2015), and the Special Provisions of this contract.
3. The locations of sign installations shown are approximate with exact locations to be determined in the field by the Engineer prior to installation.
4. Notify Trimet (503-661-8117) 3 working days in advance of any work adjacent to bus stops.

REGISTERED PROFESSIONAL ENGINEER
87558
OREGON
DECEMBER 17, 2014
KRISTEN A. SVICAROVICH
EXPIRES: JUNE 30, 2016

OREGON DEPARTMENT OF TRANSPORTATION

DKS
720 SW Washington Street, Suite 500
Portland, Oregon 97205
(503) 243-3500
www.dksassociates.com

17TH AVE TRAIL: SE OCHOCO - SE MCLOUGHLIN
CITY OF MILWAUKIE
CLACKAMAS COUNTY

DESIGNED BY: K. Svicarovich
REVIEWED BY: P. Coffey
DRAWN BY: M. Zarkas
FC: N/A MP: N/A

PERMANENT SIGNING

CITY OF MILWAUKIE DWG. NO. S-00004
TSSU NO. _____ T.R.S. DWG. NO. S-15695

SIGN INSTALLATION PLAN
STA. 39+50 TO 44+40

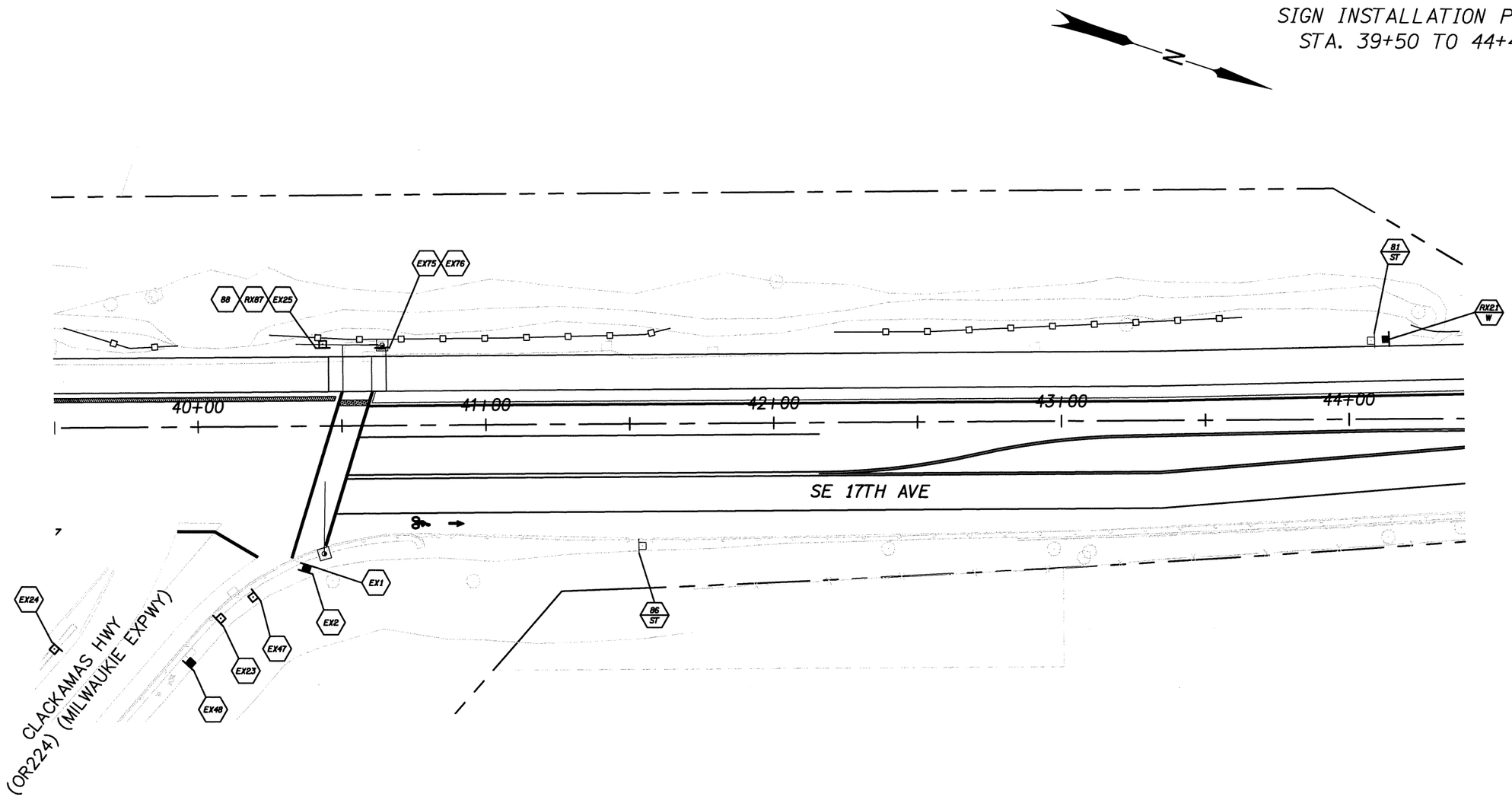

LEGEND

- EXN — Maintain and protect sign (N) and support.
- N — Install new sign (N).
- RXN — Remove existing sign (N).
- RXN / M — Remove existing sign (N) and (M) sign support.
- N / M — Install new sign (N) on new (M) sign support.

N = Sign number:
M = Material: W = Wood
ST = Perforated steel square tube sign support

General Notes:

1. This plan is accurate for signing only.
2. All materials and workmanship shall conform to the requirements of the Manual on Uniform Traffic Control Devices (MUTCD) 2009, the Oregon Standard Drawings, the Oregon Standard Specifications for Construction (2015), and the Special Provisions of this contract.
3. The locations of sign installations shown are approximate with exact locations to be determined in the field by the Engineer prior to installation.

REGISTERED PROFESSIONAL ENGINEER
87558
OREGON
DECEMBER 17, 2014
KRISTEN A. SVICAROVICH
EXPIRES: JUNE 30, 2016

OREGON DEPARTMENT OF TRANSPORTATION

DKS
720 SW Washington Street, Suite 500
Portland, Oregon 97205
(503) 243-3500
www.dksassociates.com

17TH AVE TRAIL: SE OCHOCO - SE MCLOUGHLIN
CITY OF MILWAUKIE
CLACKAMAS COUNTY

DESIGNED BY: K. Svicarovich
REVIEWED BY: P. Coffey
DRAWN BY: M. Zarkas
FC: N/A MP: N/A

PERMANENT SIGNING

CITY OF MILWAUKIE DWG. NO. S-00005
TSSU NO. _____ T.R.S. DWG. NO. S-15696

X:\Projects\2014\P14081-000 (Milwaukie 17th Av Trail)\ACAD\ S-00005.dwg

SIGN INSTALLATION PLAN
STA. 44+40 TO 49+40

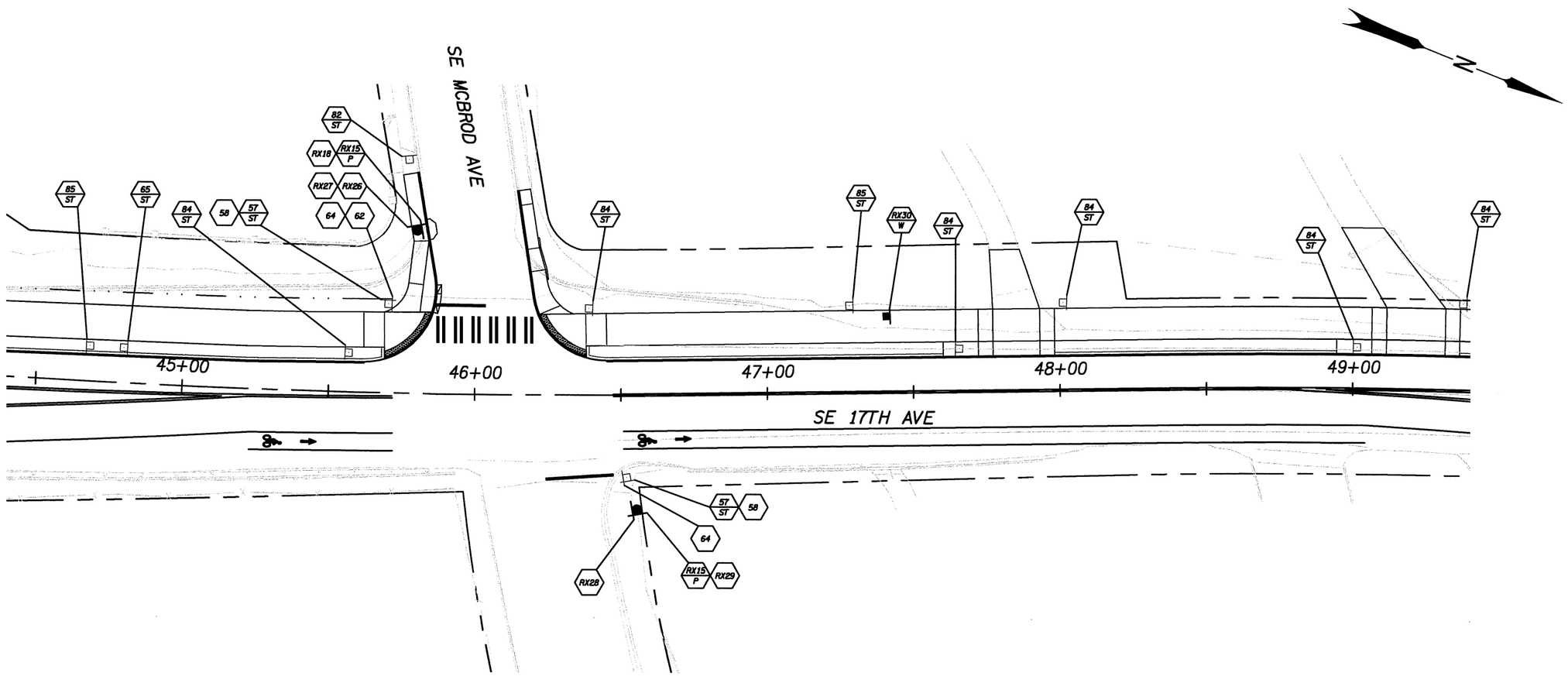

LEGEND

- N — Install new sign (N).
- RXN — Remove existing sign (N).
- RXN / M — Remove and sign (N) and (M) sign support.
- N / M — Install new sign (N) on new (M) sign support.

N = Sign number:
M = Material: W = Wood
ST = Perforated steel square tube sign support
P = Round pipe support

General Notes:

1. This plan is accurate for signing only.
2. All materials and workmanship shall conform to the requirements of the Manual on Uniform Traffic Control Devices (MUTCD) 2009, the Oregon Standard Drawings, the Oregon Standard Specifications for Construction (2015), and the Special Provisions of this contract.
3. The locations of sign installations shown are approximate with exact locations to be determined in the field by the Engineer prior to installation.

REGISTERED PROFESSIONAL ENGINEER 87558 OREGON DECEMBER 17, 2014 KRISTEN A. SVICAROVICH

EXPIRES: JUNE 30, 2016

OREGON DEPARTMENT OF TRANSPORTATION

DKS 720 SW Washington Street, Suite 500 Portland, Oregon 97205 (503) 243-3500 www.dksassociates.com

17TH AVE TRAIL: SE OCHOCO - SE MCLOUGHLIN

CITY OF MILWAUKIE

CLACKAMAS COUNTY

DESIGNED BY: K. Svicarovich
REVIEWED BY: P. Coffey
DRAWN BY: M. Zarkas
FC: N/A MP: N/A

PERMANENT SIGNING

CITY OF MILWAUKIE DWG. NO. S-00006

TSSU NO. _____ T.R.S. DWG. NO. _____

X:\Projects\2014\P14081-000 (Milwaukie 17th Av Trail)\ACAD\ S-00006.dwg

SIGN INSTALLATION PLAN
STA. 49+40 TO 54+40

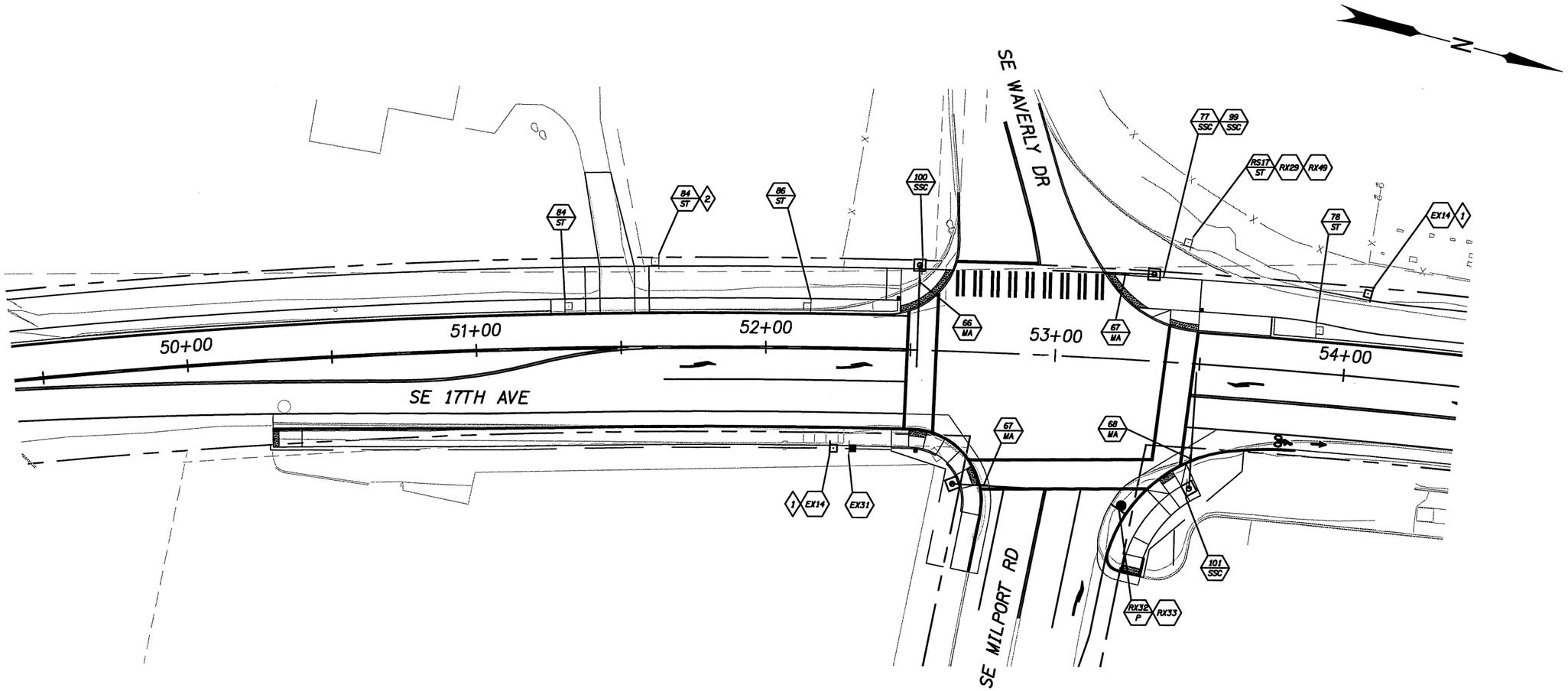

Construction Notes:

1. Contractor to coordinate with TriMet (503-661-8117) for relocation of sign.
2. Due to limited horizontal clearance along the shared-use path, the sign will be flag mounted adjacent to the path.

L E G E N D

- EXN — Maintain and protect sign (N) and support.
- RXN — Remove existing sign (N).
- RXN M — Remove existing sign (N) and (M) sign support.
- RSN M — Remove and save existing sign (N) and remove (M) sign support.
- N M — Install new sign (N) on new (M) sign support.

N = Sign number:
M = Material:
- P = Round pipe support
- ST = Perforated steel square tube sign support
- SSC = Stainless steel clamp
- MA = Mast arm street name sign mount

General Notes:

1. This plan is accurate for signing only.
2. All materials and workmanship shall conform to the requirements of the Manual on Uniform Traffic Control Devices (MUTCD) 2009, the Oregon Standard Drawings, the Oregon Standard Specifications for Construction (2015), and the Special Provisions of this contract.
3. The locations of sign installations shown are approximate with exact locations to be determined in the field by the Engineer prior to installation.
4. Notify Trimet (503-661-8117) 3 working days in advance of any work adjacent to bus stops.

REGISTERED PROFESSIONAL ENGINEER 87558 OREGON DECEMBER 17, 2014 KRISTEN A. SVICAROVICH

EXPIRES: JUNE 30, 2016

OREGON DEPARTMENT OF TRANSPORTATION

DKS 720 SW Washington Street, Suite 500 Portland, Oregon 97205 (503) 243-3500 www.dksassociates.com

17TH AVE TRAIL: SE OCHOCO - SE MCLOUGHLIN

CITY OF MILWAUKIE

CLACKAMAS COUNTY

DESIGNED BY: K. Svicarovich
REVIEWED BY: P. Coffey
DRAWN BY: M. Zarkas
FC: N/A MP: N/A

PERMANENT SIGNING

CITY OF MILWAUKIE DWG. NO. S-00007

TSSU NO. _____ T.R.S. DWG. NO. _____

X:\Projects\2014\P14081-000 (Milwaukie 17th Av Trail)\ACAD\ S-00007.dwg

SIGN INSTALLATION PLAN
STA. 54+40 TO 59+40

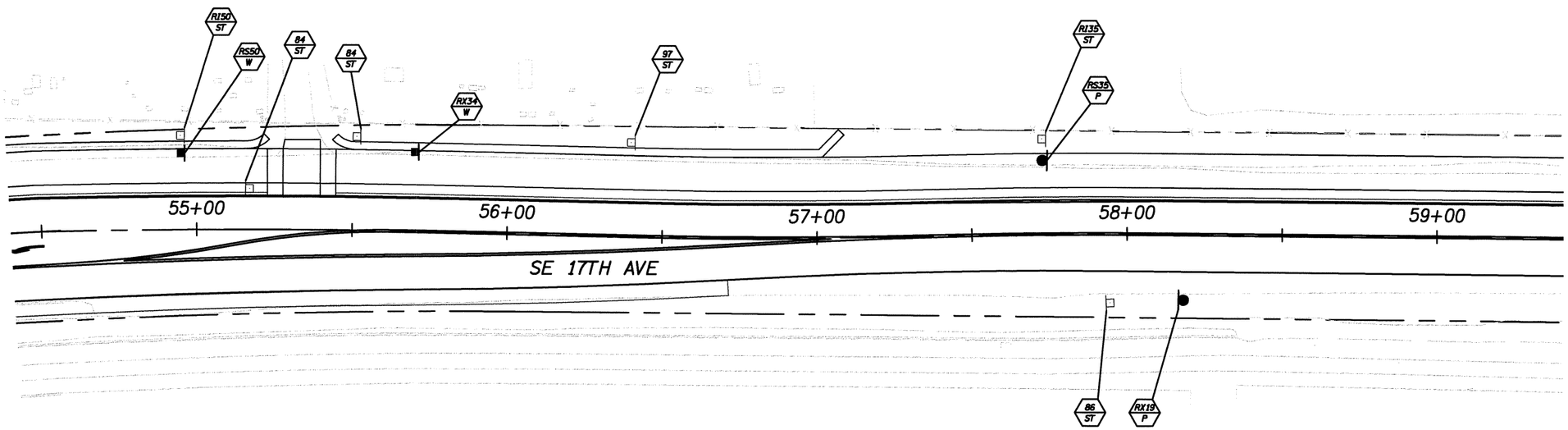

LEGEND

- RSN/M — Remove and save existing sign (N) and remove (M) sign support.
- RXN/M — Remove and sign (N) and (M) sign support.
- RIN/M — Reinstall existing sign (N) on new (M) sign support.
- N/M — Install new sign (N) on new (M) sign support.

N = Sign number;
M = Material: W = Wood; ST = Perforated steel square tube sign support; P = Pipe post

General Notes:

1. This plan is accurate for signing only.
2. All materials and workmanship shall conform to the requirements of the Manual on Uniform Traffic Control Devices (MUTCD) 2009, the Oregon Standard Drawings, the Oregon Standard Specifications for Construction (2015), and the Special Provisions of this contract.
3. The locations of sign installations shown are approximate with exact locations to be determined in the field by the Engineer prior to installation.

REGISTERED PROFESSIONAL ENGINEER 87558 OREGON DECEMBER 17, 2014 KRISTEN A. SVICAROVICH

EXPIRES: JUNE 30, 2016

OREGON DEPARTMENT OF TRANSPORTATION

DKS 720 SW Washington Street, Suite 500 Portland, Oregon 97205 (503) 243-3500 www.dksassociates.com

17TH AVE TRAIL: SE OCHOCO - SE MCLOUGHLIN

CITY OF MILWAUKIE
CLACKAMAS COUNTY

DESIGNED BY: K. Svicarovich
REVIEWED BY: P. Coffey
DRAWN BY: M. Zarkos
FC: N/A MP: N/A

PERMANENT SIGNING

CITY OF MILWAUKIE DWG. NO. S-00008
TSSU NO. _____ T.R.S. DWG. NO. _____

X:\Projects\2014\P14081-000 (Milwaukie 17th Av Trail)\ACAD\ S-00008.dwg

SIGN INSTALLATION PLAN
STA. 59+40 TO 64+40

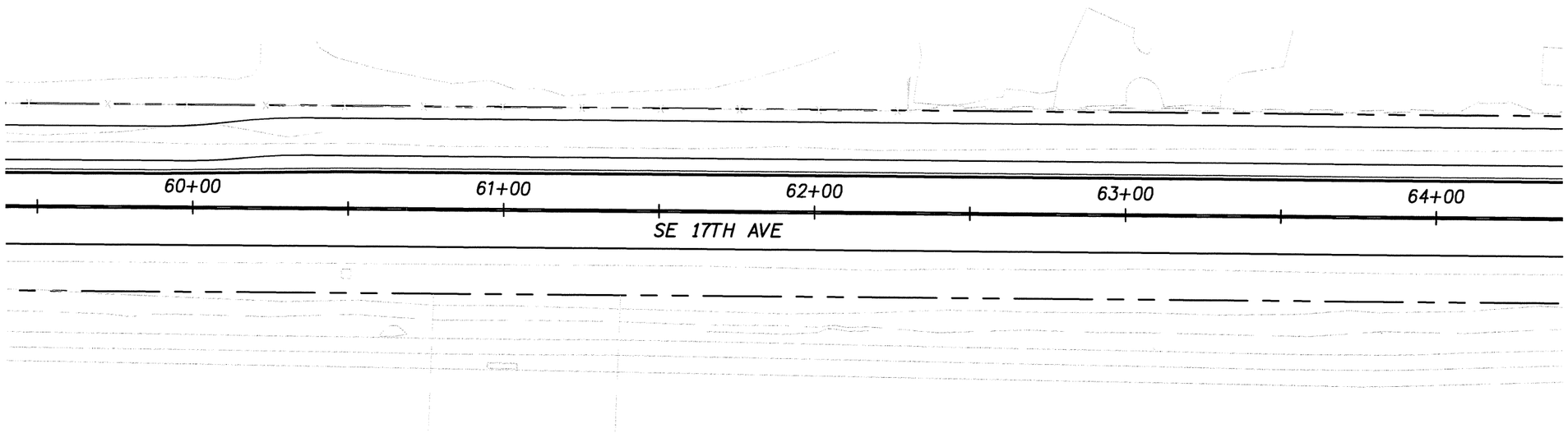

General Notes:

1. This plan is accurate for signing only.
2. All materials and workmanship shall conform to the requirements of the Manual on Uniform Traffic Control Devices (MUTCD) 2009, the Oregon Standard Drawings, the Oregon Standard Specifications for Construction (2015), and the Special Provisions of this contract.
3. The locations of sign installations shown are approximate with exact locations to be determined in the field by the Engineer prior to installation.

REGISTERED PROFESSIONAL ENGINEER
87558
OREGON
DECEMBER 17, 2014
KRISTEN A. SVICAROVICH

EXPIRES: JUNE 30, 2016

OREGON DEPARTMENT OF TRANSPORTATION

DKS
720 SW Washington Street, Suite 500
Portland, Oregon 97205
(503) 243-3500
www.dksassociates.com

17TH AVE TRAIL: SE OCHOCO - SE MCLOUGHLIN

CITY OF MILWAUKIE
CLACKAMAS COUNTY

DESIGNED BY: K. Svicarovich
REVIEWED BY: P. Coffey
DRAWN BY: M. Zarkas
FC: N/A MP: N/A

PERMANENT SIGNING

CITY OF MILWAUKIE DWG. NO. S-00009

TSSU NO. _____ T.R.S. DWG. NO. _____

X:\Projects\2014\P14081-000 (Milwaukie 17th Av Trail)\ACAD\ S-00009.dwg

SIGN INSTALLATION PLAN
STA. 64+40 TO 69+40

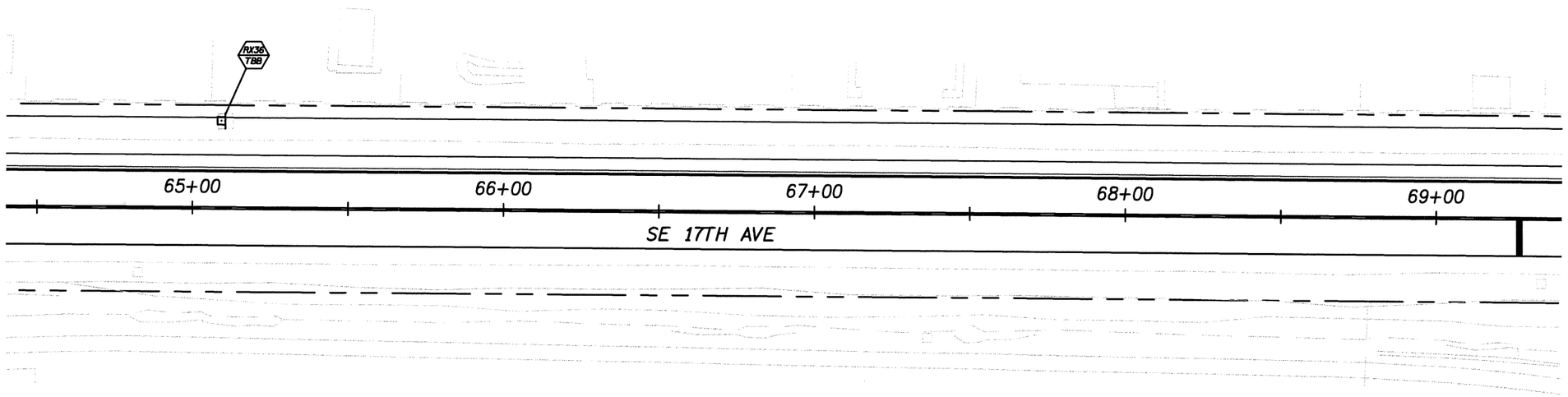

General Notes:

1. This plan is accurate for signing only.
2. All materials and workmanship shall conform to the requirements of the Manual on Uniform Traffic Control Devices (MUTCD) 2009, the Oregon Standard Drawings, the Oregon Standard Specifications for Construction (2015), and the Special Provisions of this contract.
3. The locations of sign installations shown are approximate with exact locations to be determined in the field by the Engineer prior to installation.

L E G E N D

RXN M — Remove existing sign (N) and (M) sign support.

N = Sign number:
M = Material: TBB = Triangular base breakaway

REGISTERED PROFESSIONAL ENGINEER 87558 OREGON DECEMBER 17, 2014 KRISTEN A. SVICAROVICH

EXPIRES: JUNE 30, 2016

OREGON DEPARTMENT OF TRANSPORTATION

DKS 720 SW Washington Street, Suite 500 Portland, Oregon 97205 (503) 243-3500 www.dksassociates.com

17TH AVE TRAIL: SE OCHOCO - SE MCLOUGHLIN
CITY OF MILWAUKIE
CLACKAMAS COUNTY

DESIGNED BY: K. Svicarovich
REVIEWED BY: P. Coffey
DRAWN BY: M. Zarkas
FC: N/A MP: N/A

PERMANENT SIGNING

CITY OF MILWAUKIE DWG. NO. S-00010

TSSU NO. _____ T.R.S. DWG. NO. _____

X:\Projects\2014\P14081-000 (Milwaukie 17th Av Trail)\ACAD\ S-00010.dwg

SIGN INSTALLATION PLAN
STA. 69+40 TO 74+30

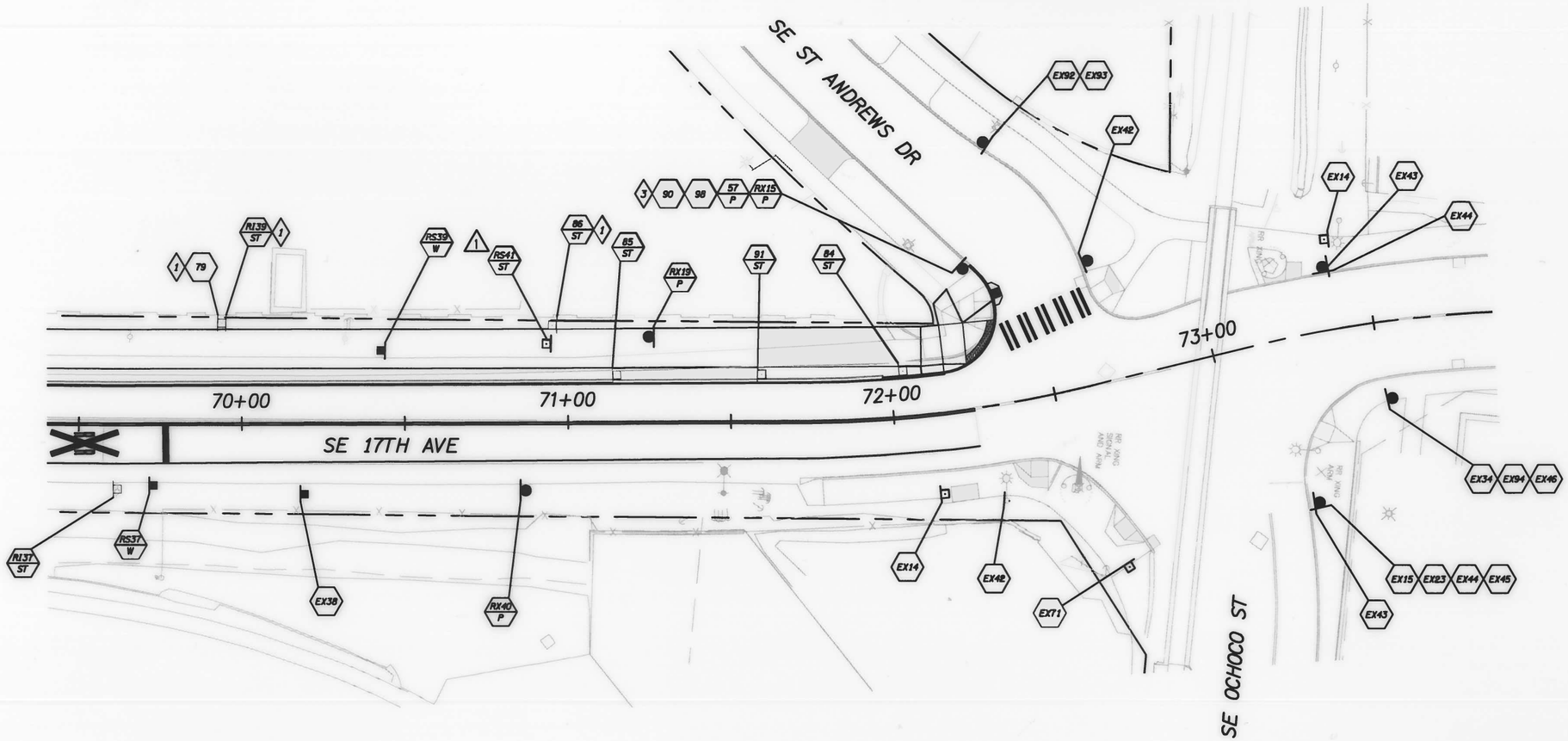

LEGEND

- EXN — Maintain and protect sign (N) and support.
- RXN/M — Remove and sign (N) and (M) sign support.
- RSN/M — Remove and save existing sign (N) and remove (M) sign support.
- RIN/M — Reinstall existing sign (N) on new (M) sign support.
- N/M — Install new sign (N) on new (M) sign support.
- N — Install new sign (N).

N = Sign number:
M = Material: W = Wood
ST = Perforated steel square tube sign support
P = Round pipe support

Construction Notes:

1. Due to limited horizontal clearance along the shared-use path, the sign will be flag mounted adjacent to the path.
2.
3. Sign support and signs to be designed to City of Portland Standards. See Sign and Post Data Table.

General Notes:

1. This plan is accurate for signing only.
2. All materials and workmanship shall conform to the requirements of the Manual on Uniform Traffic Control Devices (MUTCD) 2009, the Oregon Standard Drawings, the Oregon Standard Specifications for Construction (2015), and the Special Provisions of this contract.
3. The locations of sign installations shown are approximate with exact locations to be determined in the field by the Engineer prior to installation.
4. Notify Trimet (503-661-8117) 3 working days in advance of any work adjacent to bus stops.

Rev. No.	Description	Date	Engineer
1	Removed construction note	2/5/16	KAS

REGISTERED PROFESSIONAL ENGINEER 87558 OREGON DECEMBER 17, 2014 KRISTEN A. SVICAROVICH

EXPIRES: JUNE 30, 2016

OREGON DEPARTMENT OF TRANSPORTATION

DKS 720 SW Washington Street, Suite 500 Portland, Oregon 97205 (503) 243-3500 www.dksassociates.com

17TH AVE TRAIL: SE OCHOCO - SE MCLOUGHLIN

CITY OF MILWAUKIE

CLACKAMAS COUNTY

DESIGNED BY: K. Svicarovich
REVIEWED BY: P. Coffey
DRAWN BY: M. Zarkos
FC: N/A MP: N/A

PERMANENT SIGNING

CITY OF MILWAUKIE DWG. NO. S-00011

TSSU NO. _____ T.R.S. DWG. NO. _____

X:\Projects\2014\P14081-000 (Milwaukie 17th Av Trail)\ACAD\ S-00011.dwg

SIGN DETAILS

SIGN NO. 1

SIGN NO. 2

SIGN NO. 3

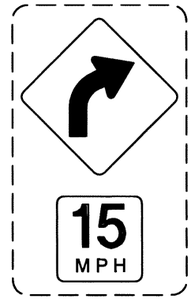

SIGN NO. 4

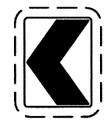

SIGN NO. 5

SIGN NO. 6

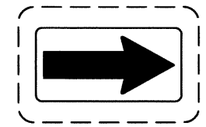

SIGN NO. 7

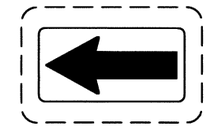

SIGN NO. 8

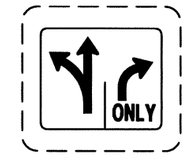

SIGN NO. 9

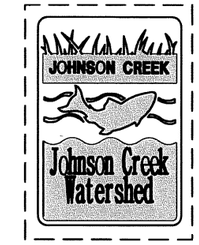

SIGN NO. 10

SIGN NO. 11

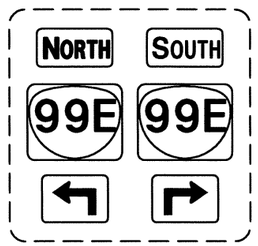

SIGN NO. 12

SIGN NO. 13

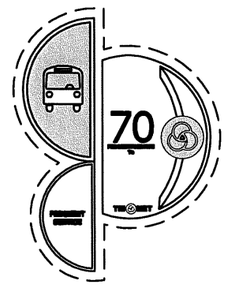

SIGN NO. 14

SIGN NO. 15

SIGN NO. 16

SIGN NO. 17*

SIGN NO. 18

SIGN NO. 19

SIGN NO. 20

SIGN NO. 21

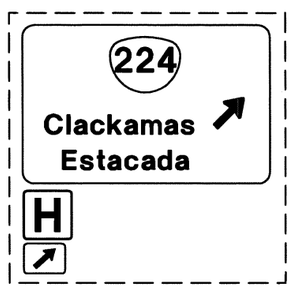

SIGN NO. 22

SIGN NO. 23

SIGN NO. 24

SIGN NO. 25

SIGN NO. 26

SIGN NO. 27

SIGN NO. 28

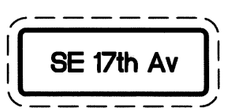

SIGN NO. 29

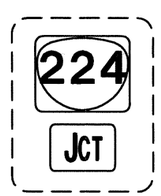

SIGN NO. 30

*Double sided sign

NOTE:
Signs shown with broken borders are existing signs.

REGISTERED PROFESSIONAL ENGINEER
87558
OREGON
DECEMBER 17, 2014
KRISTEN A. SVICAROVICH
EXPIRES: JUNE 30, 2016

OREGON DEPARTMENT OF TRANSPORTATION

DKS
720 SW Washington Street, Suite 500
Portland, Oregon 97205
(503) 243-3500
www.dksassociates.com

17TH AVE TRAIL: SE OCHOCO - SE MCLOUGHLIN
CITY OF MILWAUKIE
CLACKAMAS COUNTY

DESIGNED BY: K. Svicarovich
REVIEWED BY: P. Caffey
DRAWN BY: M. Zarkas
FC: N/A MP: N/A

PERMANENT SIGNING

CITY OF MILWAUKIE DWG. NO. S-00012
TSSU NO. _____ T.R.S. DWG. NO. _____

X:\Projects\2014\P14081-000 (Milwaukie 17th Av Trail)\ACAD\ S-00012.dwg

SIGN DETAILS

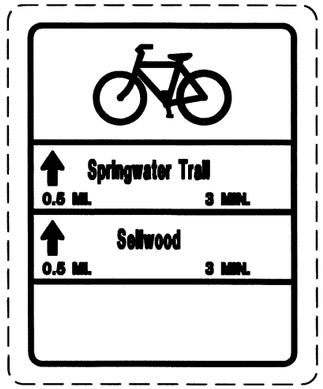

SIGN NO. 31

SIGN NO. 32

SIGN NO. 33

SIGN NO. 34

SIGN NO. 35

SIGN NO. 36

SIGN NO. 37

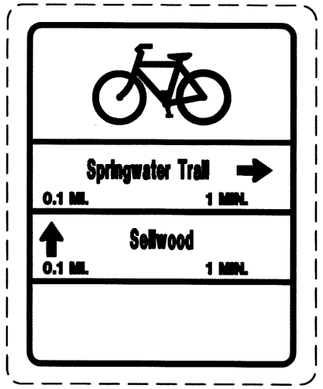

SIGN NO. 38

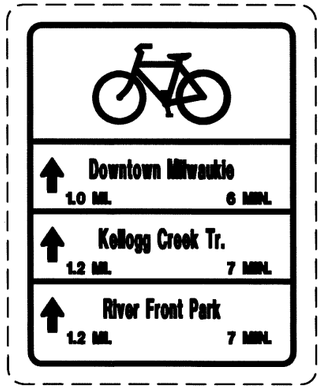

SIGN NO. 39

SIGN NO. 40

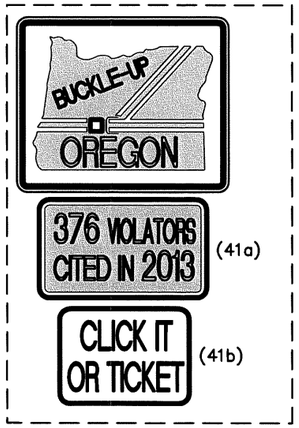

SIGN NO. 41

SIGN NO. 42

SIGN NO. 43

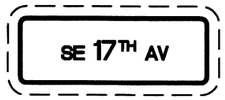

SIGN NO. 44

SIGN NO. 45

SIGN NO. 46

SIGN NO. 47

SIGN NO. 48

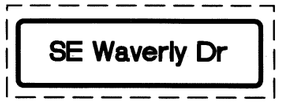

SIGN NO. 49

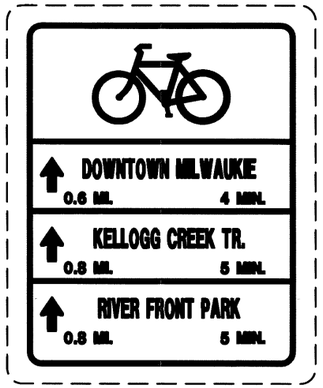

SIGN NO. 50

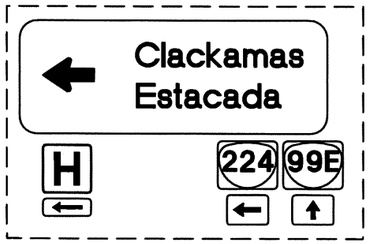

SIGN NO. 51

NOTE:
Signs shown with broken borders are existing signs.

REGISTERED PROFESSIONAL ENGINEER
87558
OREGON
DECEMBER 17, 2014
KRISTEN A. SVICAROVICH
EXPIRES: JUNE 30, 2016

OREGON DEPARTMENT OF TRANSPORTATION

DKS
720 SW Washington Street, Suite 500
Portland, Oregon 97205
(503) 243-3500
www.dksassociates.com

17TH AVE TRAIL: SE OCHOCO - SE MCLOUGHLIN
CITY OF MILWAUKIE
CLACKAMAS COUNTY

DESIGNED BY: K. Svicarovich
REVIEWED BY: P. Coffey
DRAWN BY: M. Zarkas
FC: N/A MP: N/A

PERMANENT SIGNING

CITY OF MILWAUKIE DWG. NO. S-00013
TSSU NO. _____ T.R.S. DWG. NO. _____

X:\Projects\2014\P14081-000 (Milwaukie 17th Av Trail)\ACAD\ S-00013.dwg

SIGN DETAILS

SIGN NO. 52

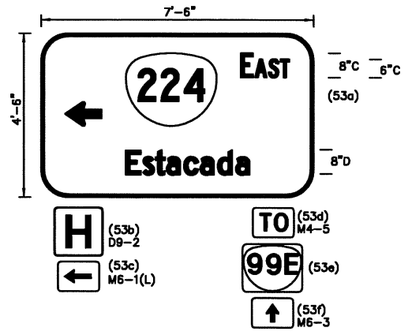

SIGN NO. 53

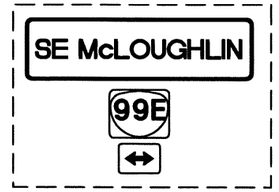

SIGN NO. 54

SIGN NO. 55

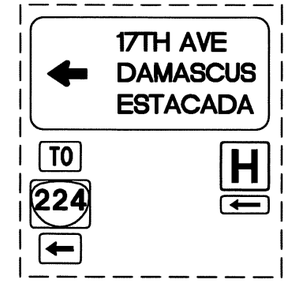

SIGN NO. 56

SIGN NO. 57

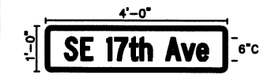

SIGN NO. 58 *

SIGN NO. 59 *

NOT USED

SIGN NO. 60

SIGN NO. 61

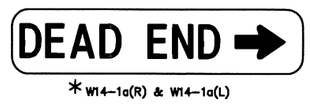

* W14-1a(R) & W14-1a(L)

SIGN NO. 62

NOT USED

SIGN NO. 63

SIGN NO. 64 *

SIGN NO. 65

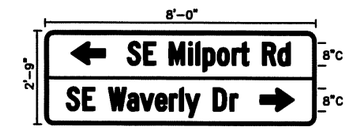

SIGN NO. 66

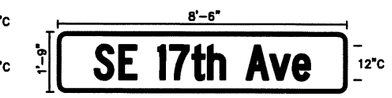

SIGN NO. 67

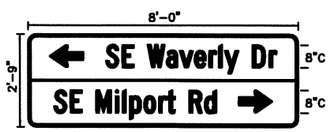

SIGN NO. 68

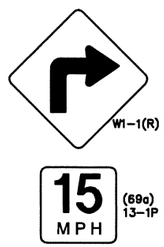

SIGN NO. 69

NOT USED

SIGN NO. 70

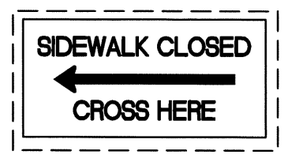

SIGN NO. 71

SIGN NO. 72

SIGN NO. 73

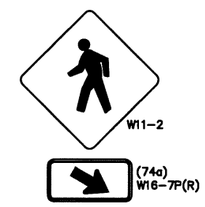

SIGN NO. 74

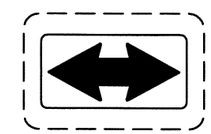

SIGN NO. 75

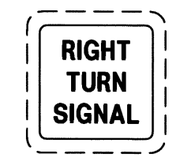

SIGN NO. 76

SIGN NO. 77

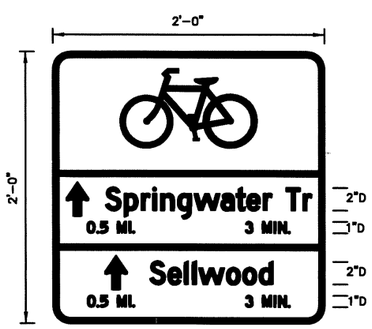

OBD1-2C
2"x3" ARROWS

SIGN NO. 78

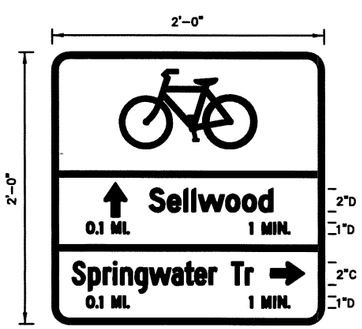

OBD1-2C
2"x3" ARROWS

SIGN NO. 79

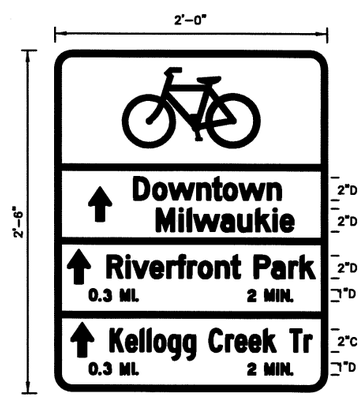

OBD1-3C
2"x3" ARROWS

SIGN NO. 80

W8-14

SIGN NO. 81

** Double sided sign*

NOTE:

Signs shown with broken borders are existing signs.

REGISTERED PROFESSIONAL ENGINEER 87558 OREGON DECEMBER 17, 2014 KRISTEN A. SVICAROVICH

EXPIRES: JUNE 30, 2016

OREGON DEPARTMENT OF TRANSPORTATION

DKS 720 SW Washington Street, Suite 500 Portland, Oregon 97205 (503) 243-3500 www.dksassociates.com

17TH AVE TRAIL: SE OCHOCO - SE MCLOUGHLIN

CITY OF MILWAUKIE

CLACKAMAS COUNTY

DESIGNED BY: K. Svicarovich
REVIEWED BY: P. Coffey
DRAWN BY: M. Zarkae
FC: N/A MP: N/A

PERMANENT SIGNING

CITY OF MILWAUKIE DWG. NO. S-00014

TSSU NO. _____ T.R.S. DWG. NO. S-15697

X:\Projects\2014\P14081-000 (Milwaukie 17th Av Trail)\ACAD\ S-00014.dwg

SIGN DETAILS

SIGN NO. 82

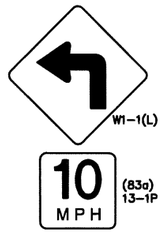

SIGN NO. 83

SIGN NO. 84

SIGN NO. 85

SIGN NO. 86

SIGN NO. 87

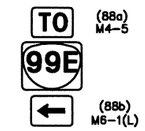

SIGN NO. 88

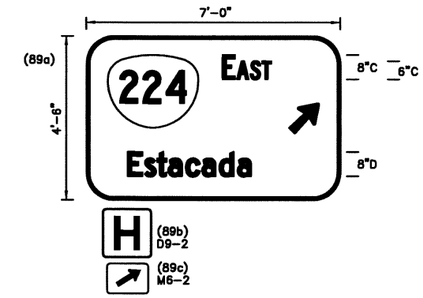

SIGN NO. 89

SIGN NO. 90*

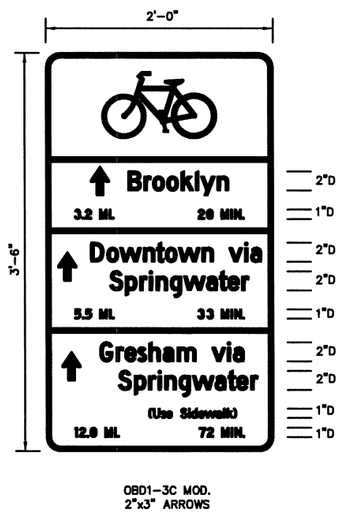

SIGN NO. 91

SIGN NO. 92

SIGN NO. 93

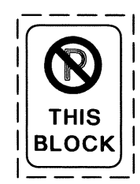

SIGN NO. 94

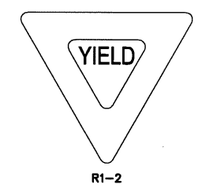

SIGN NO. 95

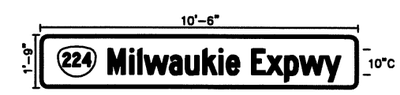

SIGN NO. 96

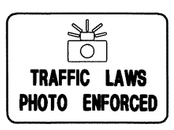

SIGN NO. 97

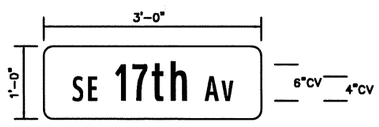

SIGN NO. 98*

SIGN NO. 99

SIGN NO. 100

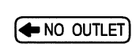

SIGN NO. 101

* Double sided sign

NOTE:

Signs shown with broken borders are existing signs.

REGISTERED PROFESSIONAL ENGINEER 87558 OREGON DECEMBER 17, 2014 KRISTEN A. SVICAROVICH

EXPIRES: JUNE 30, 2016

OREGON DEPARTMENT OF TRANSPORTATION

DKS 720 SW Washington Street, Suite 500 Portland, Oregon 97205 (503) 243-3500 www.dksassociates.com

17TH AVE TRAIL: SE OCHOCO - SE MCLOUGHLIN

CITY OF MILWAUKIE

CLACKAMAS COUNTY

DESIGNED BY: K. Svicarovich
REVIEWED BY: P. Coffey
DRAWN BY: M. Zarkas
FC: N/A MP: N/A

PERMANENT SIGNING

CITY OF MILWAUKIE DWG. NO. S-00015

TSSU NO. _____ T.R.S. DWG. NO. S-15698

X:\Projects\2014\P14081-000 (Milwaukie 17th Av Trail)\ACAD\ S-00015.dwg

SIGN AND POST DATA TABLE

SIGN NO.	SIGN LOCATION 4/	SIGN DIMENSIONS WIDTH	SIGN DIMENSIONS HEIGHT	BORDER WIDTH 1/2"	BORDER WIDTH 1"	BORDER WIDTH 2"	RADIUS 1 1/2"	RADIUS 3"	RADIUS 6"	RADIUS 9"	RADIUS 12"	ARROW SIZE (IN.)	SIGN TYPE (PER SEC. 02910 STD. SPECIFICATIONS & SPECIAL PROVISIONS)	SUB-STRATE PLYWOOD	SUB-STRATE SHEET ALUMINUM	SUB-STRATE EXTRUDED ALUMINUM	COLOR 1/ BACK-GROUND ASTM TYPE III OR TYPE IV	COLOR 1/ BACK-GROUND ASTM TYPE IX	COLOR 1/ LEGEND ASTM TYPE III OR TYPE IV	COLOR 1/ LEGEND ASTM TYPE IX	COLOR 1/ LEGEND NON-REFLECTIVE	LEGEND TYPE PERMANENT	LEGEND TYPE DEMOUNTABLE	SIGN NO. 2/	TYPE OF SUPPORT WOOD POST	PERF. STEEL SQUARE TUBE	TRIANGULAR BASE BREAKAWAY	MULTI-POST BREAKAWAY	STAINLESS STEEL CLAMP (SSC)	SIGNAL POLE MOUNT	BRIDGE RAIL MOUNT	STRUCTURE MOUNT	CANTILEVER	SIGN BRIDGE	EXIT NUMBER SIGN MOUNT	"H" FRAME	ROUTE MARKER FRAME	MILEPOST MARKER POST	ADJUSTABLE SIGN MOUNT	MAST ARM ST. NAME SIGN MNT	SECONDARY SIGN SUPPORT C 4 X 5.4	SECONDARY SIGN SUPPORT C 4 X 7.25	SECONDARY SIGN SUPPORT LENGTH (FT.)	POST SIZE (BASED ON ESTIMATED LENGTH)	POST LENGTH (MUST BE FIELD VERIFIED)	FOOTING LOCATION 3/	FOOTING 671.	REFER TO OREGON STANDARD DRAWING TM200, TM201, TM635	TM212	TM223 & TM230 & TM233	TM602	TM675	TM676	TM677	TM678	TM680, TM650, TM450	TM671, TM681, TM687, TM686	REMARKS
5	23 + 19 Lt	(18")	(24")										Exist.											5						✓											2-1/2x2-1/2, 12ga.	9'-6"			✓										See Sheet S-00020 for Bridge Rail Mount Detail.
	23 + 46 Lt	(18")	(24")										Exist.																	✓											2-1/2x2-1/2, 12ga.	9'-6"			✓										See Sheet S-00020 for Bridge Rail Mount Detail.
6	23 + 00 Lt	(30")	(30")										Exist.											6						✓											2-1/2x2-1/2, 12ga.	10'-0"			✓										See Sheet S-00020 for Bridge Rail Mount Detail.
7	23 + 92 Lt	(48")	(24")										Exist.											7						✓											2-1/2x2-1/2, 12ga.	9'-6"			✓										See Sheet S-00020 for Bridge Rail Mount Detail.
8	23 + 71 Lt	(48")	(24")										Exist.											8						✓											2-1/2x2-1/2, 12ga.	9'-6"			✓										See Sheet S-00020 for Bridge Rail Mount Detail.
9	24 + 12 Lt	(30")	(30")										Exist.											9						✓											2-1/2x2-1/2, 12ga.	10'-0"			✓										See Sheet S-00020 for Bridge Rail Mount Detail.
10	26 + 70 Rt	(24")	(30")										Exst.											10		✓															2x2, 12ga.	12'-0"	2'-0"	3'-0"	✓				✓			✓		3/Distance from guardrail.
17	30 + 63 Lt	(36")	(8")										Exst.											17																					✓				✓				Install above Sign 59.
23	38 + 66 Rt	(30")	(36")										Exist.											23		✓															2-1/4x2-1/2, 12ga.	15'-0"	6'-0"	3'-0"	✓				✓			✓		
35	57 + 72 Lt	(42")	(48")										Exist.											35		✓															2-1/2x2-1/2, 10ga.	13'-0"	4'-0"	3'-0"	✓				✓			✓		3/Distnace from edge of path.
37	69+71 Rt	(36" dia.)											Exist.											37		✓															2-1/2x2-1/2, 12ga.	12'-0"	3'-0"	3'-0"	✓				✓			✓		3/Distance from edge of pavement.
39	69 + 93 Lt	(24")	(30")										Exist.											39		✓															2x2, 12ga.	11'-4"	2'-0"	3'-0"	✓				✓			✓		3/Distnace from edge of path.
50	54 + 95 Lt	(24")	(30")										Exist.											50		✓															2x2, 12ga.	11'-6"	1'-6"	3'-0"	✓				✓			✓		3/Distance from retaining wall.
53	39 + 38 Lt	7'-6"	4'-6"		✓				✓			8" x 12"	G1			✓	G			W			✓	53						✓															✓	✓		✓			✓		
53b		24"	24"										B		✓		B		SW			✓		53b															✓	5'-9"				✓					✓		
53c		21"	15"										B		✓		B		SW			✓		53c																				✓					✓		
53d		24"	12"										W1		✓		SW				BK	✓		53d																✓	6'-11"				✓					✓		
53e		30"	24"										W1		✓		SW				BK	✓		53e																					✓					✓		
53f		21"	15"										W1		✓		SW				BK	✓		53f																					✓					✓		

1/ BK=BLACK
BL=BLUE
BR=BROWN
G=GREEN
O=ORANGE
R=RED
RB=RED-BLUE
SW=SILVER-WHITE
Y=YELLOW
YG=YELLOW-GREEN
W=WHITE
RG=RED-GREEN

2/ NOTE: L,C,R ARE LOCATIONS OF POSTS FACING THE SIGN.
L=LEFT POST
C=CENTER POST
R=RIGHT POST

3/ DISTANCE FROM FACE OF CURB TO THE CENTERLINE OF THE NEAREST FOOTING.

4/ NOTE: THE LOCATIONS SHOWN ARE APPROXIMATE EXCEPT FOR SPEED ZONES, SCHOOL ZONES AND MILEPOST MARKERS. EXACT LOCATIONS ARE TO BE DETERMINED BY THE ENGINEER.

5/ MINIMUM DEPTH OF FOOTING FOR TRIANGULAR BASE BREAKAWAY AND MULTI-POST BREAKAWAY INSTALLATIONS IS FOR A 2' DIAMETER FOOTING. FOR ADDITIONAL INFORMATION SEE STANDARD DRAWINGS TM601 AND TM602.

REGISTERED PROFESSIONAL ENGINEER 87558 OREGON DECEMBER 17, 2014 KRISTEN A. SVICAROVICH

EXPIRES: JUNE 30, 2016

OREGON DEPARTMENT OF TRANSPORTATION

DKS 720 SW Washington Street, Suite 500 Portland, Oregon 97205 (503) 243-3500 www.dksassociates.com

17TH AVE TRAIL: SE OCHOCO - SE MCLOUGHLIN

CITY OF MILWAUKIE

CLACKAMAS COUNTY

DESIGNED BY: K. Svicarovich
REVIEWED BY: P. Coffey
DRAWN BY: M. Zarkas
FC: N/A MP: N/A

PERMANENT SIGNING

CITY OF MILWAUKIE DWG. NO. S-00016

TSSU NO. _____ T.R.S. DWG. NO. S-15699

SIGN AND POST DATA TABLE

SIGN NO.	SIGN LOCATION 4/	SIGN DIMENSIONS WIDTH	SIGN DIMENSIONS HEIGHT	BORDER WIDTH 1/2"	BORDER WIDTH 1"	BORDER WIDTH 2"	RADIUS 1 1/2"	RADIUS 3"	RADIUS 6"	RADIUS 9"	RADIUS 12"	ARROW SIZE (IN.)	SIGN TYPE (PER SEC. 02910 STD. SPECIFICATIONS & SPECIAL PROVISIONS)	SUB-STRATE PLYWOOD	SUB-STRATE SHEET ALUMINUM	SUB-STRATE EXTRUDED ALUMINUM	COLOR 1/ BACK-GROUND ASTM TYPE III OR TYPE IV	COLOR 1/ BACK-GROUND ASTM TYPE IX	COLOR 1/ LEGEND ASTM TYPE III OR TYPE IV	COLOR 1/ LEGEND ASTM TYPE IX	COLOR 1/ LEGEND NON-REFLECTIVE	LEGEND TYPE PERMANENT	LEGEND TYPE DEMOUNTABLE	SIGN NO. 2/	TYPE OF SUPPORT WOOD POST	PERF. STEEL SQUARE TUBE	TRIANGULAR BASE BREAKAWAY	MULTI-POST BREAKAWAY	STAINLESS STEEL CLAMP (SSC)	SIGNAL POLE MOUNT	BRIDGE RAIL MOUNT	STRUCTURE MOUNT	CANTILEVER	SIGN BRIDGE	EXIT NUMBER SIGN MOUNT	"H" FRAME	ROUTE MARKER FRAME	MILEPOST MARKER POST	ADJUSTABLE SIGN MOUNT	MAST ARM ST. NAME SIGN MNT	2" PIPE POST (CITY OF PORTLAND)	2" Sch 40 STEEL PIPE POST	DOUBLE SNG CROSS PIECE (12")	SECONDARY SIGN SUPPORT C 4 X 5.4	SECONDARY SIGN SUPPORT C 4 X 7.25	SECONDARY SIGN SUPPORT LENGTH (FT.)	POST SIZE (BASED ON ESTIMATED LENGTH)	POST LENGTH (MUST BE FIELD VERIFIED)	FOOTING LOCATION 3/	FOOTING MIN. DEPTH 5/	BREAKAWAY ANCHOR ASSEMBLY	REFER TO OREGON STANDARD DRAWING TM200, TM201, TM635	TM212	TM223 & TM230 & TM233	TM602	TM675	TM676	TM677	TM678	TM680, TM650, TM450	TM671, TM681, TM697, TM686	REFER TO CITY OF PORTLAND STANDARD DRAWINGS P-400, P-405 & P-410	P-412, P420	REMARKS
57	30 + 63 Lt	30"	30"										R		✓		R		SW			✓		57		✓															✓																					3/Distance from back of curb
	45 + 67 Lt	30"	30"										R		✓		R		SW			✓				✓															✓			2-1/4x2-1/2, 12ga.	12'-0"	1'-0"	3'-0"		✓				✓				✓					3/Distance from back of curb
	46 + 51 Rt	30"	30"										R		✓		R		SW			✓				✓															✓			2-1/4x2-1/2, 12ga.	14'-0"	3'-0"	3'-0"		✓				✓				✓					3/Distance from back of curb
																																									✓			2-1/4x2-1/2, 12ga.	11'-6"	6'-0"	3'-0"		✓				✓				✓					3/Distance from edge of pavement
	72 +28 Lt	30"	30"										R		✓		R		SW			✓																	✓		✓		2"	13'-0"	6'-0"		✓											✓	✓	3/Distance from face of curb. Sign assembly to follow City of Portland Design Standards.
58	30 + 63 Lt	4'-0"	1'-0"		✓		✓						G		✓		G		SW			✓		58																												✓				✓								Install above Sign 57, Sign to be double sided.
	45 + 67 Lt	4'-0"	1'-0"		✓		✓						G		✓		G		SW			✓																													✓				✓								Install above Sign 57, Sign to be double sided.
	46 + 51 Rt	4'-0"	1'-0"		✓		✓						G		✓		G		SW			✓																													✓				✓								Install above Sign 57, Sign to be double sided.
59	30 + 63 Lt	3'-9"	1'-0"		✓		✓						G		✓		G		SW			✓		59																												✓				✓								Install above Sign 58, Sign to be double sided.
62	45 + 78 Lt	36"	8"										Y1		✓		Y				BK	✓		62																												✓				✓								Install above Sign 64. Sign to be double sided.
64	45 + 67 Lt	4'-9"	1'-0"		✓		✓						G		✓		G		SW			✓		64																												✓				✓								Install above Sign 58, Sign to be double sided.
	46 + 51 Rt	4'-9"	1'-0"		✓		✓						G		✓		G		SW			✓																													✓				✓								Install above Sign 58, Sign to be double sided.
65	44 + 80 Lt	30"	24"										W1		✓		SW				BK	✓		65	✓																						2x2, 12ga.	11'-0"	2'-0"	3'-0"		✓	✓			✓				✓					3/Distance from edge of pavement.
65a		21"	15"										W1		✓		SW				BK	✓		65a																												✓				✓								
66	52 + 55 Lt	8'-0"	2'-9"		✓			✓					G2		✓		G			W		✓		66															✓																			✓						
67	53 + 33 Lt	8'-6"	1'-9"		✓			✓					G2		✓		G			W		✓		67															✓																			✓						
	52 + 67 Rt	8'-6"	1'-9"		✓			✓					G2		✓		G			W		✓																	✓																			✓						
68	53 + 68 Rt	8'-0"	2'-9"		✓			✓					G2		✓		G			W		✓		68															✓																			✓						
69	22 + 94 Rt	30"	30"										Y1		✓		Y				BK	✓		69	✓																						2-1/2x2-1/2, 12ga.	15'-0"	6'-0"	3'-0"		✓				✓					✓				3/Distance from edge of pavement.
69a		18"	18"										Y1		✓		Y				BK	✓		69a																																								

1/ BK=BLACK
BL=BLUE
BR=BROWN
G=GREEN
O=ORANGE
R=RED
RB=RED-BLUE
SW=SILVER-WHITE
Y=YELLOW
YG=YELLOW-GREEN
W=WHITE
RG=RED-GREEN

2/ NOTE: L,C,R ARE LOCATIONS OF POSTS FACING THE SIGN.
L=LEFT POST
C=CENTER POST
R=RIGHT POST

3/ DISTANCE FROM FACE OF CURB TO THE CENTERLINE OF THE NEAREST FOOTING.

4/ NOTE: THE LOCATIONS SHOWN ARE APPROXIMATE EXCEPT FOR SPEED ZONES, SCHOOL ZONES AND MILEPOST MARKERS. EXACT LOCATIONS ARE TO BE DETERMINED BY THE ENGINEER.

5/ MINIMUM DEPTH OF FOOTING FOR TRIANGULAR BASE BREAKAWAY AND MULTI-POST BREAKAWAY INSTALLATIONS IS FOR A 2' DIAMETER FOOTING. FOR ADDITIONAL INFORMATION SEE STANDARD DRAWINGS TM601 AND TM602.

REGISTERED PROFESSIONAL ENGINEER
87558
OREGON
DECEMBER 17, 2014
KRISTEN A. SVICAROVICH
EXPIRES: JUNE 30, 2016

OREGON DEPARTMENT OF TRANSPORTATION

DKS 720 SW Washington Street, Suite 500 Portland, Oregon 97205 (503) 243-3500 www.dksassociates.com

17TH AVE TRAIL: SE OCHOCO - SE MCLOUGHLIN

CITY OF MILWAUKIE
CLACKAMAS COUNTY

DESIGNED BY: K. Svicarovich
REVIEWED BY: P. Coffey
DRAWN BY: M. Zarkas
FC: N/A MP: N/A

PERMANENT SIGNING

CITY OF MILWAUKIE DWG. NO. S-00017
TSSU NO. _____ T.R.S. DWG. NO. S-15700

SIGN AND POST DATA TABLE

SIGN NO.	SIGN LOCATION 4/	SIGN DIMENSIONS WIDTH	SIGN DIMENSIONS HEIGHT	BORDER WIDTH 1/2"	BORDER WIDTH 1"	BORDER WIDTH 2"	RADIUS 1 1/2"	RADIUS 3"	RADIUS 6"	RADIUS 9"	RADIUS 12"	ARROW SIZE (IN.)	SIGN TYPE (PER SEC. 02910 STD. SPECIFICATIONS & SPECIAL PROVISIONS)	SUB-STRATE PLYWOOD	SUB-STRATE SHEET ALUMINUM	SUB-STRATE EXTRUDED ALUMINUM	COLOR 1/ BACK-GROUND ASTM TYPE III OR TYPE IV	COLOR 1/ BACK-GROUND ASTM TYPE IX	COLOR 1/ LEGEND ASTM TYPE III OR TYPE IV	COLOR 1/ LEGEND ASTM TYPE IX	COLOR 1/ LEGEND NON-REFLECTIVE	LEGEND TYPE PERMANENT	LEGEND TYPE DEMOUNTABLE	SIGN NO. 2/	TYPE OF SUPPORT WOOD POST	PERF. STEEL SQUARE TUBE	TRIANGULAR BASE BREAKAWAY	MULTI-POST BREAKAWAY	STAINLESS STEEL CLAMP (SSC)	SIGNAL POLE MOUNT	BRIDGE RAIL MOUNT	STRUCTURE MOUNT	CANTILEVER	SIGN BRIDGE	EXIT NUMBER SIGN MOUNT	"H" FRAME	ROUTE MARKER FRAME	MILEPOST MARKER POST	ADJUSTABLE SIGN MOUNT	MAST ARM ST. NAME SIGN MNT	SECONDARY SIGN SUPPORT C 4 X 5.4	SECONDARY SIGN SUPPORT C 4 X 7.25	SECONDARY SIGN SUPPORT LENGTH (FT.)	POST SIZE (BASED ON ESTIMATED LENGTH)	POST LENGTH (MUST BE FIELD VERIFIED)	FOOTING LOCATION 3/	FOOTING MIN. DEPTH 5/	REFER TO OREGON STANDARD DRAWING TM200, TM201, TM635	TM212	TM223 & TM230 & TM233	TM602	TM675	TM676	TM677	TM678	TM680, TM850, TM450	TM671, TM681, TM687, TM688	REMARKS
72	29 + 35 Rt	30"	30"										Y1		✓		Y				BK	✓		72		✓																2-1/2x2-1/2, 12ga.	14'-0"	4'-0"	3'-0"	✓					✓				✓	3/Distance from edge of pavement.
72a		24"	12"										Y1		✓		Y				BK	✓		72a																					✓								
72	33 + 50 Lt	30"	30"										Y1		✓		Y				BK	✓		72		✓																2-1/2x2-1/2, 12ga.	14'-0"	4'-0"	3'-0"	✓					✓				✓	3/Distance from edge of path.
72a		24"	12"										Y1		✓		Y				BK	✓		72a																					✓								
73	31 + 52 Rt	30"	30"										Y1		✓		Y				BK	✓		73		✓																2-1/2x2-1/2, 12ga.	14'-0"	4'-0"	3'-0"	✓					✓				✓	3/Distance from edge of pavement.
73a		24"	12"										Y1		✓		Y				BK	✓		73a																					✓								
73	31 + 68 Lt	30"	30"										Y1		✓		Y				BK	✓		73		✓																2-1/2x2-1/2, 12ga.	14'-0"	3'-0"	3'-0"	✓					✓				✓	
73a		24"	12"										Y1		✓		Y				BK	✓		73a																					✓								
74	31 + 52 Rt	30"	30"										Y1		✓		Y				BK	✓		74																					✓					✓				Install opposite Sign 73.
74a		24"	12"										Y1		✓		Y				BK	✓		74a																					✓					✓				
74	31 + 68 Lt	30"	30"										Y1		✓		Y				BK	✓		74																					✓					✓				Install opposite Sign 73.
74a		24"	12"										Y1		✓		Y				BK	✓		74a																					✓					✓				
77	53 + 33 Lt	30"	24"										W1		✓		SW				BK	✓		77					✓																✓	✓					✓			Install below Sign 67.
77a		24"	12"										W2		✓		SW				BK	✓		77a					✓																✓						✓			
77b		21"	15"										W1		✓		SW				BK	✓		77b					✓																✓						✓			
78	53 + 91 Lt	24"	24"	✓			✓					2" x 3"	G		✓		G		SW			✓		78		✓																2x2, 12ga.	11'-0"	2'-0"	3'-0"	✓					✓				✓	3/Distance from edge of path.
79	69 + 93 Lt	24"	24"	✓			✓					2" x 3"	G		✓		G		SW			✓		79																					✓					✓				Install opposite Sign 39.
80	24 + 50 Lt	24"	30"	✓			✓					2" x 3"	G		✓		G		SW			✓		80		✓																2x2, 12ga.	11'-4"	2'-6"	3'-0"	✓					✓				✓	3/Distance from edge of path.
81	34 + 60 Rt	30"	30"										Y1		✓		Y				BK	✓		81		✓																2x2, 12ga.	12'-6"	13'-0"	3'-0"	✓					✓				✓	3/Distance from edge of pavement.
	44 + 07 Lt	30"	30"										Y1		✓		Y				BK	✓				✓																2x2, 12ga.	12'-6"	3'-0"	3'-0"	✓					✓				✓	3/Distance from edge of path.
82	30 + 50 Lt	30"	30"										Y1		✓		Y				BK	✓		82		✓																2x2, 12ga.	14'-0"	5'-0"	3'-0"	✓					✓				✓	3/Distance from face of curb
82a		24"	12"										Y1		✓		Y				BK	✓		82a																					✓					✓				
82	45 + 78 Lt	30"	30"										Y1		✓		Y				BK	✓		82		✓																2x2, 12ga.	14'-0"	5'-0"	3'-0"	✓					✓				✓	3/Distance from face of curb
82a		24"	12"										Y1		✓		Y				BK	✓		82a																					✓					✓				
83	25 + 53 Lt	30"	30"										Y1		✓		Y				BK	✓		83		✓																2-1/2x2-1/2, 12 ga.	15'-0"	2'-0"	3'-0"	✓					✓				✓	3/Distance from edge of path.
83a		18"	18"										Y1		✓		Y				BK	✓		83a																																
84	30 + 37 Lt	24"	24"										W11		✓		SW		R		BK	✓		84		✓																2x2, 12ga.	10'-10"	2'-0"	3'-0"	✓					✓				✓	3/Distance from face of curb.
	31 + 40 Lt	24"	24"										W11		✓		SW		R		BK	✓				✓																2x2, 12ga.	10'-10"	3'-0"	3'-0"	✓					✓				✓	3/Distance from edge of path.
	35 + 27 Lt	24"	24"										W11		✓		SW		R		BK	✓				✓																2x2, 12ga.	12'-10"	2'-0"	3'-0"	✓					✓				✓	3/Distance from edge of pavement.
	35 + 82 Lt	24"	24"										W11		✓		SW		R		BK	✓				✓																2x2, 12ga.	10'-10"	4'-0"	3'-0"	✓					✓				✓	3/Distance from edge of path.
	45 + 57 Lt	24"	24"										W11		✓		SW		R		BK	✓				✓																2x2, 12ga.	12'-10"	2'-0"	3'-0"	✓					✓				✓	3/Distance from edge of pavement.
	46 + 37 Lt	24"	24"										W11		✓		SW		R		BK	✓				✓																2x2, 12ga.	10'-10"	3'-0"	3'-0"	✓					✓				✓	3/Distance from edge of path.

1/ BK=BLACK
BL=BLUE
BR=BROWN
G=GREEN
O=ORANGE
R=RED
RB=RED-BLUE
SW=SILVER-WHITE
Y=YELLOW
YG=YELLOW-GREEN
W=WHITE
RG=RED-GREEN

2/ NOTE: L,C,R ARE LOCATIONS OF POSTS FACING THE SIGN.
L=LEFT POST
C=CENTER POST
R=RIGHT POST

3/ DISTANCE FROM FACE OF CURB TO THE CENTERLINE OF THE NEAREST FOOTING.

4/ NOTE: THE LOCATIONS SHOWN ARE APPROXIMATE EXCEPT FOR SPEED ZONES, SCHOOL ZONES AND MILEPOST MARKERS. EXACT LOCATIONS ARE TO BE DETERMINED BY THE ENGINEER.

5/ MINIMUM DEPTH OF FOOTING FOR TRIANGULAR BASE BREAKAWAY AND MULTI-POST BREAKAWAY INSTALLATIONS IS FOR A 2' DIAMETER FOOTING. FOR ADDITIONAL INFORMATION SEE STANDARD DRAWINGS TM601 AND TM602.

REGISTERED PROFESSIONAL ENGINEER
87588
OREGON
DECEMBER 17, 2014
KRISTEN A. SVICAROVICH
EXPIRES: JUNE 30, 2016

OREGON DEPARTMENT OF TRANSPORTATION

DKS 720 SW Washington Street, Suite 500 Portland, Oregon 97205 (503) 243-3500 www.dksassociates.com

17TH AVE TRAIL: SE OCHOCO - SE MCLOUGHLIN
CITY OF MILWAUKIE
CLACKAMAS COUNTY

DESIGNED BY: K. Svicarovich
REVIEWED BY: P. Coffey
DRAWN BY: M. Zarkas
FC: N/A MP: N/A

PERMANENT SIGNING

CITY OF MILWAUKIE DWG. NO. S-00018
TSSU NO. _____ T.R.S. DWG. NO. S-15701

SIGN AND POST DATA TABLE

SIGN NO.	SIGN LOCATION 4/	SIGN DIMENSIONS WIDTH	SIGN DIMENSIONS HEIGHT	BORDER WIDTH 1/2"	BORDER WIDTH 1"	BORDER WIDTH 2"	RADIUS 1 1/2"	RADIUS 3"	RADIUS 6"	RADIUS 9"	RADIUS 12"	ARROW SIZE (IN.)	SIGN TYPE (PER SEC. 02910 STD. SPECIFICATIONS & SPECIAL PROVISIONS)	SUB-STRATE PLYWOOD	SUB-STRATE SHEET ALUMINUM	SUB-STRATE EXTRUDED ALUMINUM	COLOR 1/ BACK-GROUND ASTM TYPE III OR TYPE IV	COLOR 1/ BACK-GROUND ASTM TYPE IX	COLOR 1/ LEGEND ASTM TYPE III OR TYPE IV	COLOR 1/ LEGEND ASTM TYPE IX	COLOR 1/ LEGEND NON-REFLECTIVE	LEGEND TYPE PERMANENT	LEGEND TYPE DEMOUNTABLE	SIGN NO. 2/	TYPE OF SUPPORT WOOD POST	TYPE OF SUPPORT PERF. STEEL SQUARE TUBE	TYPE OF SUPPORT TRIANGULAR BASE BREAKAWAY	TYPE OF SUPPORT MULTI-POST BREAKAWAY	TYPE OF SUPPORT STAINLESS STEEL CLAMP (SSC)	TYPE OF SUPPORT SIGNAL POLE MOUNT	TYPE OF SUPPORT BRIDGE RAIL MOUNT	TYPE OF SUPPORT STRUCTURE MOUNT	TYPE OF SUPPORT CANTILEVER	TYPE OF SUPPORT SIGN BRIDGE	TYPE OF SUPPORT EXIT NUMBER SIGN MOUNT	TYPE OF SUPPORT "H" FRAME	TYPE OF SUPPORT ROUTE MARKER FRAME	TYPE OF SUPPORT MILEPOST MARKER POST	TYPE OF SUPPORT ADJUSTABLE SIGN MOUNT	TYPE OF SUPPORT MAST ARM ST, NAME SIGN MNT	SECONDARY SIGN SUPPORT C 4 X 5.4	SECONDARY SIGN SUPPORT C 4 X 7.25	SECONDARY SIGN SUPPORT LENGTH (FT.)	POST SIZE (BASED ON ESTIMATED LENGTH)	POST LENGTH (MUST BE FIELD VERIFIED)	FOOTING LOCATION 3/	FOOTING MIN. DEPTH 5/	REFER TO OREGON STANDARD DRAWING TM200, TM201, TM635	TM212	TM223 & TM230 & TM233	TM602	TM675	TM676	TM677	TM678	TM680, TM650, TM450	TM671, TM681, TM687, TM688	REFER TO CITY OF PORTLAND STANDARD DRAWINGS P-400, P-405 & P-410	P-412, P-420	REMARKS
84	49 + 02 Lt	24"	24"										W11		✓		SW		R		BK	✓				✓																	2x2, 12ga.	12'-10"	2'-0"	3'-0"	✓					✓			✓			3/Distance from edge of pavement.
	49 + 37 Lt	24"	24"										W11		✓		SW		R		BK	✓				✓																	2x2, 12ga.	12'-10"	2'-0"	3'-0"	✓					✓			✓			3/Distance from edge of path.
	47 + 65 Lt	24"	24"										W11		✓		SW		R		BK	✓				✓																	2x2, 12ga.	12'-10"	2'-0"	3'-0"	✓					✓			✓			3/Distance from edge of pavement.
	48 + 04 Lt	24"	24"										W11		✓		SW		R		BK	✓				✓																	2x2, 12ga.	10'-10"	4'-0"	3'-0"	✓					✓			✓			3/Distance from edge of path.
	51 + 30 Lt	24"	24"										W11		✓		SW		R		BK	✓				✓																	2x2, 12ga.	12'-10"	2'-0"	3'-0"	✓					✓			✓			3/Distance from edge of pavement.
	51 + 65 Lt	24"	24"										W11		✓		SW		R		BK	✓				✓																	2x2, 12ga.	10'-10"	2'-0"	3'-0"	✓					✓			✓			3/Distance from edge of path.
	55 + 15 Lt	24"	24"										W11		✓		SW		R		BK	✓				✓																	2x2, 12ga.	12'-10"	2'-0"	3'-0"	✓					✓			✓			3/Distance from edge of pavement.
	55 + 55 Lt	24"	24"										W11		✓		SW		R		BK	✓				✓																	2x2, 12ga.	10'-10"	1'-0"	3'-0"	✓					✓			✓			3/Distance from back of retaining wall.
	72 + 04 Lt	24"	24"										W11		✓		SW		R		BK	✓				✓																	2x2, 12ga.	12'-10"	2'-0"	3'-0"	✓					✓			✓			3/Distance from face of curb.
85	29 + 62 Lt	18"	18"										Y1		✓		Y				BK	✓		85		✓																	2x2, 12ga.	11'-0"	3'-0"	3'-0"	✓					✓			✓			3/Distance from edge of path.
	32 + 22 Lt	18"	18"										Y1		✓		Y				BK	✓				✓																	2x2, 12ga.	11'-0"	3'-0"	3'-0"	✓					✓			✓			3/Distance from edge of path.
	47 + 29 Lt	18"	18"										Y1		✓		Y				BK	✓				✓																	2x2, 12ga.	11'-0"	3'-0"	3'-0"	✓					✓			✓			3/Distance from edge of path.
	44 + 80 Lt	18"	18"										Y1		✓		Y				BK	✓				✓																	2x2, 12ga.	13'-0"	2'-0"	3'-0"	✓					✓			✓			3/Distance from edge of pavement.
	71 + 15 Lt	18"	18"										Y1		✓		Y				BK	✓				✓																	2x2, 12ga.	13'-0"	2'-0"	3'-0"	✓					✓			✓			3/Distance from edge of pavement.
86	25 + 20 Rt	24"	30"										W11		✓		SW				BK	✓		86		✓																	2x2, 12ga.	12'-0"	2'-0"	3'-0"	✓					✓			✓			3/Distance from edge of pavement.
	41 + 54 Rt	24"	30"										W11		✓		SW				BK	✓				✓																	2x2, 12ga.	12'-0"	2'-0"	3'-0"	✓					✓			✓			3/Distance from guardrail
	52 + 14 Lt	24"	30"										W11		✓		SW				BK	✓				✓																	2x2, 12ga.	14'-0"	2'-0"	3'-0"	✓					✓			✓			3/Distance from edge of pavement.
	57 + 94 Rt	24"	30"										W11		✓		SW				BK	✓				✓																	2x2, 12ga.	12'-0"	4'-0"	3'-0"	✓					✓			✓			3/Distance from edge of pavement.
	70 + 95 Lt	24"	30"										W11		✓		SW				BK	✓				✓																	2x2, 12ga.	12'-0"	1'-6"	3'-0"	✓					✓			✓			3/Distance from edge of path.
88	40 + 43 Lt	30"	24"										W1		✓		SW				BK	✓		88																✓	6'-11"					✓					✓					
88a		24"	12"										W1		✓		SW				BK	✓		88a																						✓					✓					
88b		24"	24"										W1		✓		SW				BK	✓		88b																						✓					✓					
89	36 +75 Rt	84"	54"		✓			✓				8" x 12.6"	G1			✓	G			W			✓	89			✓															TS5x5x3/16	14'-5"	9'-6"	4'-6"	✓		✓	✓	✓								
89b		24"	24"										B		✓		B	SW				✓		89b																✓	5'-9"					✓					✓					
89c		24"	12"										B		✓		B	SW				✓		89c																						✓					✓					
90	72 + 28 Lt	66"	12"		✓		✓						G		✓		G	SW				✓		90																															✓	✓	Install above Sign No. 57, Sign to be double sided.
91	71 + 60 Lt	24"	42"	✓			✓					2" x 3"	G		✓		G	SW				✓		91	✓																	2x2, 12ga.	12'-6"	2'-0"	3'-0"	✓				✓				✓			3/Distance from edge of pavement.
95	38 + 66 Rt	36"	36"										R		✓		R	SW				✓		95																						✓				✓						Install above sign No. 23.

1/ BK=BLACK
BL=BLUE
BR=BROWN
G=GREEN
O=ORANGE
R=RED
RB=RED-BLUE
SW=SILVER-WHITE
Y=YELLOW
YG=YELLOW-GREEN
W=WHITE
RG=RED-GREEN

2/ NOTE: L,C,R ARE LOCATIONS OF POSTS FACING THE SIGN.
L=LEFT POST
C=CENTER POST
R=RIGHT POST

3/ DISTANCE FROM FACE OF CURB TO THE CENTERLINE OF THE NEAREST FOOTING.

4/ NOTE: THE LOCATIONS SHOWN ARE APPROXIMATE EXCEPT FOR SPEED ZONES, SCHOOL ZONES AND MILEPOST MARKERS. EXACT LOCATIONS ARE TO BE DETERMINED BY THE ENGINEER.

5/ MINIMUM DEPTH OF FOOTING FOR TRIANGULAR BASE BREAKAWAY AND MULTI-POST BREAKAWAY INSTALLATIONS IS FOR A 2' DIAMETER FOOTING. FOR ADDITIONAL INFORMATION SEE STANDARD DRAWINGS TM601 AND TM602.

REGISTERED PROFESSIONAL ENGINEER 87558 OREGON DECEMBER 17, 2014 KRISTEN A. SVICAROVICH

EXPIRES: JUNE 30, 2016

OREGON DEPARTMENT OF TRANSPORTATION

DKS 720 SW Washington Street, Suite 500 Portland, Oregon 97205 (503) 243-3500 www.dksassociates.com

17TH AVE TRAIL: SE OCHOCO - SE MCLOUGHLIN
CITY OF MILWAUKIE
CLACKAMAS COUNTY

DESIGNED BY: K. Svicarovich
REVIEWED BY: P. Coffey
DRAWN BY: M. Zarkas
FC: N/A MP: N/A

PERMANENT SIGNING

CITY OF MILWAUKIE DWG. NO. S-00019
TSSU NO. _____ T.R.S. DWG. NO. S-15702

SIGN AND POST DATA TABLE

SIGN NO.	SIGN LOCATION 4/	SIGN DIMENSIONS WIDTH	SIGN DIMENSIONS HEIGHT	BORDER WIDTH 1/2"	BORDER WIDTH 1"	BORDER WIDTH 2"	RADIUS 1 1/2"	RADIUS 3"	RADIUS 6"	RADIUS 9"	RADIUS 12"	ARROW SIZE (IN.)	SIGN TYPE (PER SEC. 02910 STD. SPECIFICATIONS & SPECIAL PROVISIONS)	SUB-STRATE PLYWOOD	SUB-STRATE SHEET ALUMINUM	SUB-STRATE EXTRUDED ALUMINUM
96	39 + 45 Lt	126"	21"		✓			✓					G1			✓
97	56 + 40 Lt	36"	24"										W1		✓	
98	72 + 28 Lt	36"	12"				✓						G		✓	
99	53 + 33 Lt	30"	30"										Y1		✓	
100	52 + 55 Lt	36"	8"										Y1		✓	
101	53 + 68 Rt	36"	8"										Y1		✓	

SIGN NO.	COLOR 1/ BACK-GROUND ASTM TYPE III OR TYPE IV	COLOR 1/ BACK-GROUND ASTM TYPE IX	COLOR 1/ LEGEND ASTM TYPE III OR TYPE IV	COLOR 1/ LEGEND ASTM TYPE IX	COLOR 1/ LEGEND NON-REFLECTIVE	LEGEND TYPE PERMANENT	LEGEND TYPE DEMOUNTABLE	SIGN NO. 2/	WOOD POST	PERF. STEEL SQUARE TUBE	TRIANGULAR BASE BREAKAWAY	MULTI-POST BREAKAWAY	STAINLESS STEEL CLAMP (SSC)	SIGNAL POLE MOUNT	BRIDGE RAIL MOUNT	STRUCTURE MOUNT	CANTILEVER	SIGN BRIDGE	EXIT NUMBER SIGN MOUNT	"H" FRAME	ROUTE MARKER FRAME	MILEPOST MARKER POST	ADJUSTABLE SIGN MOUNT	MAST ARM ST. NAME SIGN MNT	SECONDARY SIGN SUPPORT C 4 X 5.4	SECONDARY SIGN SUPPORT C 4 X 7.25	SECONDARY SIGN SUPPORT LENGTH (FT.)
96	G		SW			✓		96																✓			
97	SW				BK	✓		97		✓																	
98																											
99	Y				BK	✓		99					✓														
100	Y				BK	✓		100					✓														
101	Y				BK	✓		101					✓														

SIGN NO.	POST SIZE (BASED ON ESTIMATED LENGTH)	POST LENGTH (MUST BE FIELD VERIFIED)	FOOTING LOCATION 3/	FOOTING MIN. DEPTH 5/	TM200, TM201, TM635	TM212	TM223 & TM230 & TM233	TM602	TM675	TM676	TM677	TM678	TM680, TM650, TM450	TM671, TM681, TM687, TM688	P-400, P-405 & P-410	P-412, P420	REMARKS
96							✓										
97	2x2, 12ga.	12'-0"	1'-6"	3'-0"	✓					✓				✓			3/Distance from back of retaining wall.
98															✓	✓	Install above Sign No. 90, Sign to be double sided.
99					✓						✓						Install below Sign No. 77
100					✓						✓						Install below Sign No. 66
101					✓						✓						Install below Sign No. 68

(Column headers: REFER TO OREGON STANDARD DRAWING — TM200 through TM688 columns; REFER TO CITY OF PORTLAND STANDARD DRAWINGS — P-400 through P420 columns.)

1/ BK=BLACK
BL=BLUE
BR=BROWN
G=GREEN
O=ORANGE
R=RED
RB=RED-BLUE
SW=SILVER-WHITE
Y=YELLOW
YG=YELLOW-GREEN
W=WHITE
RG=RED-GREEN

2/ NOTE: L,C,R ARE LOCATIONS OF POSTS FACING THE SIGN.
L=LEFT POST
C=CENTER POST
R=RIGHT POST

3/ DISTANCE FROM FACE OF CURB TO THE CENTERLINE OF THE NEAREST FOOTING.

4/ NOTE: THE LOCATIONS SHOWN ARE APPROXIMATE EXCEPT FOR SPEED ZONES, SCHOOL ZONES AND MILEPOST MARKERS. EXACT LOCATIONS ARE TO BE DETERMINED BY THE ENGINEER.

5/ MINIMUM DEPTH OF FOOTING FOR TRIANGULAR BASE BREAKAWAY AND MULTI-POST BREAKAWAY INSTALLATIONS IS FOR A 2' DIAMETER FOOTING. FOR ADDITIONAL INFORMATION SEE STANDARD DRAWINGS TM601 AND TM602.

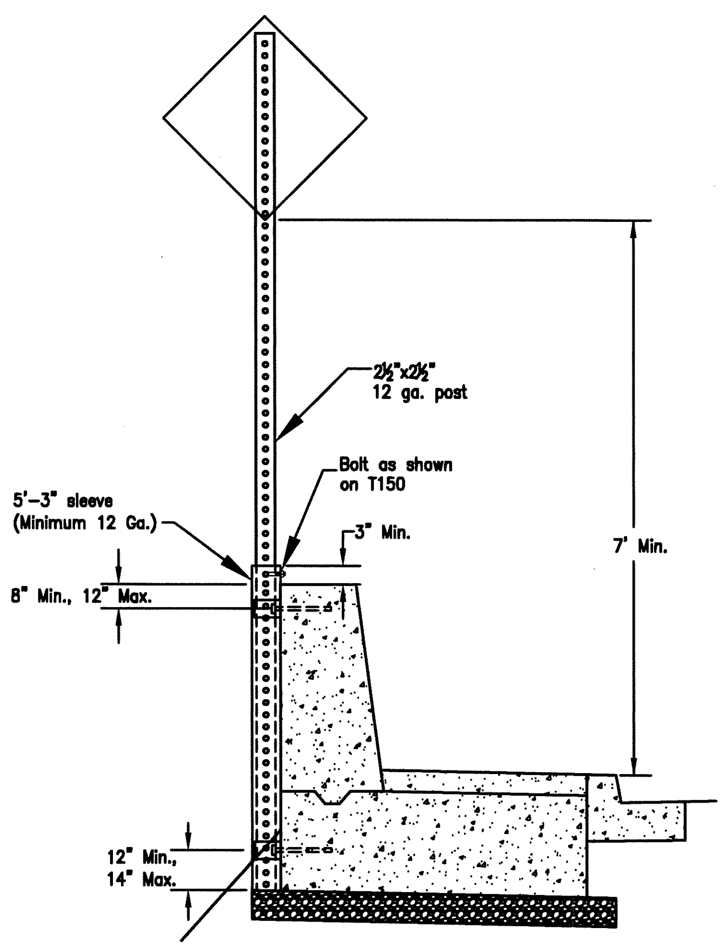

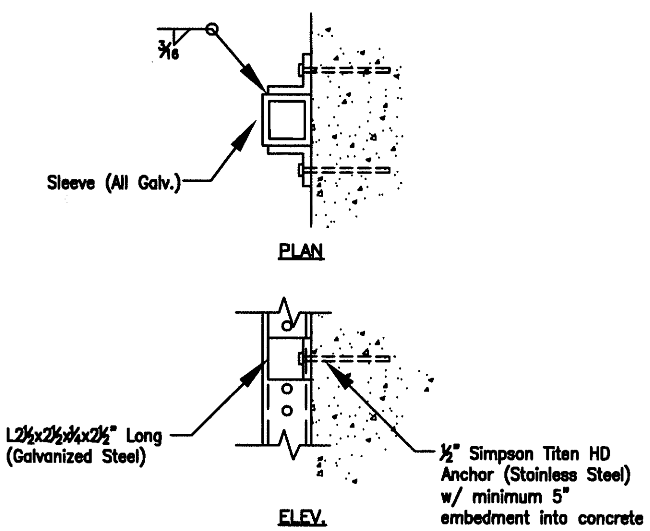

BRIDGE RAIL MOUNT
N.T.S.

REGISTERED PROFESSIONAL ENGINEER
87558
OREGON
DECEMBER 17, 2014
KRISTEN A. SVICAROVICH
EXPIRES: JUNE 30, 2016

OREGON DEPARTMENT OF TRANSPORTATION

DKS 720 SW Washington Street, Suite 500 Portland, Oregon 97205 (503) 243-3500 www.dksassociates.com

17TH AVE TRAIL: SE OCHOCO - SE MCLOUGHLIN
CITY OF MILWAUKIE
CLACKAMAS COUNTY

DESIGNED BY: K. Svicarovich
REVIEWED BY: P. Coffey
DRAWN BY: M. Zarkos
FC: N/A MP: N/A

PERMANENT SIGNING

CITY OF MILWAUKIE DWG. NO. S-00020
TSSU NO. ________ T.R.S. DWG. NO. ________

X:\Projects\2014\P14081-000 (Milwaukie 17th Av Trail)\ACAD\ S-00020.dwg

SIGNAL LEGEND

SE 17TH AVE AT PACIFIC HWY EAST (OR99E) (SE MCLOUGHLIN BLVD)
OR99E AT M.P. 5.72

SE 17TH AVE AT CLACKAMAS HWY (OR224) (MILWAUKIE EXPWY)
OR224 AT M.P. 0.00

SE 17TH AVE AT SE WAVERLY DR/SE MILPORT RD

LEGEND

CONTROLLERS

- EX/C — Retain and protect existing controller and cabinet.
- C/2070 — Install model 2070 controller in model 332S cabinet.
- C — Controller cabinet (See Signal Plan).
- 332S — Install model 332S cabinet and control equipment with riser frame, orient louvered door as shown.
- RX/C — Remove existing controller cabinet and equipment.

CABINETS

- EX/TC — Retain and protect existing terminal cabinet.
- RTC — Install recessed terminal cabinet, see T.R.S. Dwg. No. 18635 and 18636.
- BMCL — Install base mounted service cabinet, 120/240 volt metered, for signal and signal pole mounted illumination systems.
- AW — Install Fouch base mounted flip top metered pedestal, part #0600-0074-00 (stainless steel) and mounting base on new foundation. See Dwg. No. 00017 for details. See Oregon Standard Drawing TM485 for foundation details.
- RX/TC — Remove existing terminal cabinet.
- RX/MS — Remove existing metered service.
- RX/SC — Remove existing service cabinet.

POLES

- EX/MP — Retain and protect existing traffic signal mast arm pole.
- EX/LA — Retain and protect existing luminaire arm.
- EX/WP — Retain and protect existing wood pole.
- EX/MA — Retain and protect existing mast arm.
- SM/T — Install (T-type) standard traffic signal mast arm pole (see "Pole Entrance Chart").
- STP/T — Install (T-type) standard traffic signal strain pole.
- PP — Install pedestrian signal pedestal with frangible base.
- MA/L — Install (L-length) foot traffic signal mast arm.
- LA/L — Install (L-length) foot luminaire arm.
- RX/MP — Remove existing traffic signal mast arm pole and terminal cabinet.
- RX/SP — Remove existing strain pole and terminal cabinet.
- RX/PP — Remove existing pedestrian signal pedestal.
- RX/LA — Remove existing luminaire arm.

SIGNALS

- EX/VPh — Retain and protect existing (Ph-phase) vehicle signal.
- EX/P/B — Retain and protect existing pedestrian signal, pushbutton, and instruction sign.
- V/Ph — Install phase (Ph-phase) vehicle signal.
- C/B/Ph — Install phase (Ph-phase) countdown pedestrian signal with clamshell mount and pushbutton with 'H' mount.
- FYB — Install 2" fluorescent yellow reflective sheeting border, ASTM type 9, to existing back plate.
- P/B/Ph — Install phase (Ph-phase) pedestrian signal with LED countdown timer, audible pedestrian signal (APS) pushbutton assembly, and instruction sign. Ped heads and pushbuttons to be field installed.
- RX/P/B — Remove existing pedestrian signal, push button, and instruction sign.
- RX/VPh — Remove existing phase (Ph-phase) vehicle signal.

SIGNS

- * — See signing plans for details on sign and attachment.
- EX/AL — Retain and protect existing aluminum sign.

LUMINAIRES

- EX/LUM — Retain and protect existing luminaire.
- PE/I — Install photo electronic control relay on pole as per Std. Dwg. No. TM465.
- LED — Install light emitting diode (LED) luminaire (see Special Provisions). Bond luminaire to pole grounding terminal.
- RI/LUM — Reinstall existing luminaire.
- RX/LUM — Remove existing luminaire.

JUNCTION BOXES

- EX/JB — Retain and protect existing junction box.
- EX/HH — Retain and protect existing fiber optic hand hole.
- EX/SPB — Retain and protect existing loop access point, sand pocket black-out with conduit to junction box.
- JB/I — Install 17"x10"x12" (min. dimension) precast concrete junction box.
- JB/IA — Install 17"x10"x12" (min. dimension) precast concrete junction box with concrete apron.
- JB/2A — Install 22"x12"x12" (min. dimension) precast concrete junction box with concrete apron.
- JB/3A — Install 30"x17"x12" (min. dimension) precast concrete junction box with concrete apron.
- JB/3/TA — Install tandem 30"x17"x12" (min. dimension) precast concrete junction boxes with concrete aprons. See TM472 for details.
- JB/SP — Junction box (See Signal Plan).
- JB/DP — Junction box (See Detector Plan).
- SP/S — Install 6" max. sand pocket block-out with (S-size) inch conduit to junction box.
- RX/JB — Remove existing junction box.
- AX/JB — Abandon existing junction box.
- AX/SPB — Abandon existing loop access point, sand pocket black-out with conduit to junction box.

WIRES & CABLES

- EX/W — Retain and protect existing wiring.
- EX/39 — Retain and protect existing messenger cable.
- EX/SPC — Retain and protect existing fiber optic splice closure.
- EXPL — Retain and protect existing pull line.
- EXLW — Retain and protect existing No. 16 AWG THWN (locate wire).
- 3S — Install galv. steel 3/8" messenger and 1/4" tether cables.
- VDP/T — Install video detection coaxial and power cable for camera (T-camera).
- X-N/G — Install (X-number of cables) control cables(s) with (N-number) (G-AWG wire size) AWG conductors.
- RCC/U — Install radar control cables for radar detector unit (U). Refer to manufacturer's specifications.
- N-C — Install (N) No. 8 type THWN (signal system common).
- N-G — Install (N) No. (G) stranded copper wire ground.
- N|G — Install (N-number) No. (G-AWG wire size) XHHW wires.
- PL — Install poly pull line.
- RILW — Reinstall one No. 16 AWG THWN (locate wire).
- RRLW — Remove and relocate existing No. 16 AWG THWN (locate wire).
- RX/W — Remove existing wiring.

WIRES & CABLES (CON'T)

- RX/39 — Remove existing messenger cable.
- AX/W — Abandon existing wiring.
- * — Use spare #14 AWG conductor for signal common.

FIRE PREEMPTION

- FD/Ph — Install phase (Ph-phase) fire preemption detector unit.
- FF/Ph — Install phase (Ph-phase) fire preemption detector feeder cable.

DETECTION

- EX/DPh — Retain and protect existing phase (Ph-phase) vehicle detector loop.
- EX/DBPh — Retain and protect existing phase (Ph-phase) bicycle detector loop.
- LD/Ph — Install phase (Ph-phase) 6' round vehicle detector loop.
- LB/Ph — Install phase (Ph-phase) 2' diamond bicycle detector loop.
- PhT/X — Install phase (Ph-Phase) detection zone on radar (T-radar) with voyage detector number (X-Number).
- LD/LC — Install count 6' round vehicle detector loop.
- LF/X-Ph — Install (x-number of cables) phase (Ph-phase) loop feeder cables.
- N/LW — Install (N-number) pair of loop wires.
- FIB/X-Ph — Install (X-number of cables) phase (Ph-phase) 18 AWG loop feeder cables.
- RAD/U — Install Wavetronix smart sensor matrix radar detector unit (U). Label radar detector unit with "M", radar detector ID, and approach direction. Label must be readable from the ground.
- RX/FPh — Remove existing phase (Ph-phase) loop feeder cable.
- AX/DPh — Abandon existing (Ph-phase) vehicle detector loop.
- AX/DBPh — Abandon existing (Ph-phase) bicycle detector loop.
- AX/LC — Abandon existing count detector loop.

CONDUITS

- EX/EC (S) — Retain and protect existing (S-size) inch electrical conduit.
- EX/DC (S) — Retain and protect existing (S-size) inch detector conduit.
- EX/IC (S) — Retain and protect existing (S-size) inch interconnect conduit.
- S — Install (S-size) inch conduit.
- EC — Electrical conduit (see Signal Plan).
- DC — Detector conduit (see Detector Plan).
- IC — Interconnect conduit (see Interconnect Plan).
- CS — Install 2" conduit stub (for future use, cap ends).
- CJ — Splice new electrical conduit to existing electrical conduit.
- W — Install 3" conduit and wire as required by power company.
- HDD — Install conduit by horizontal directional drilling, open trench not allowed.
- AX/EC — Abandon existing electrical conduit.
- AX/DC — Abandon existing detector conduit.
- AX/IC (S) — Abandon existing (S-size) inch interconnect conduit.

COMMUNICATIONS

- EX FO/N — Retain and protect existing (N-number) strand fiber optic cable.
- FCPP — Install fiber optic communications patch panel. Field verify cable length prior to ordering.
- (X)/INFO — Coil (X) feet of (N) fiber strands, fiber optic cable in fiber optic hand hole.
- SPC — Install fiber optic splice closure.
- FO/N — Install "N" strands, fiber optic cable.
- RR/DIN — Remove and relocate existing fiber optic communications bracket.
- RR/FCPP — Remove and relocate existing fiber optic communications patch panel.
- RR FO/N — Remove and relocate existing (N-number) strand fiber optic cable.
- RI/DIN — Reinstall existing fiber optic communications bracket.
- RI/FCPP — Reinstall existing fiber optic communications patch panel.
- RI FO/N — Reinstall (N-number) strand fiber optic cable.
- RX/FCPP — Remove existing fiber optic communications patch panel.
- RX FO/N — Remove existing (N-number) strand fiber optic cable.

HEADS & BRACKETS

2 - 12"R, 12"Y, 12"G
3L - 12"RLTA, 12"YLTA, 12"GLTA
5 - 12"R, 12"Y, 12"G, 12"YRTA, 12"GRTA
6L - 12"RLTA, 12"YLTA, 12"FYLTA, 12"GLTA
B - Adjustable signal bracket assembly w/ rain cap(s) (Install 1" galvanized chase nipple)
SH - Spanwire hanger (see Std. Dwg. TM463)
SM - 4" Side pole mounting bracket
VL - Video detection camera bracket, cable mount. 1-piece with 23" tube (Pelco part No. AS-0175 or approved equal). Mount camera on luminaire arm. Mount camera on flat part of luminaire arm or as directed by Engineer.

Note:
See City of Milwaukie Dwg. No. 00002 thru 00017 for Signal Plans.

Traffic Section Approval

REGISTERED PROFESSIONAL ENGINEER 18,503 OREGON JULY 10, 1996 BRIAN K. COPELAND

EXPIRES: DEC. 31, 2015

OREGON DEPARTMENT OF TRANSPORTATION

DKS — 720 SW Washington Street, Suite 500, Portland, Oregon 97205 — (503) 243-3500 — www.dksassociates.com

17TH AVE TRAIL: SE OCHOCO - SE MCLOUGHLIN
CITY OF MILWAUKIE
CLACKAMAS COUNTY

DESIGNED BY: K. Svicarovich
REVIEWED BY: B. Copeland
DRAWN BY: M. Zarkos
FC: Varies MP: Varies

SIGNAL LEGEND

ACCOMPANIED BY DWGS. TM450, TM452, TM457, TM458, TM460, TM462, TM463, TM465, TM467, TM470, TM472, TM475, TM480, TM482, TM485, TM650, TM651, TM652, TM653, TM660, TM661, TM679 and Dwg. No. 00002-00016
CITY OF MILWAUKIE DWG. NO. 00001
TSSU NO. _____ T.R.S. DWG. NO. 18626

X:\Projects\2014\P14081-000 (Milwaukie 17th Av Trail)\ACAD\ 00001.dwg

DETECTION MODIFICATION PLAN
SE 17TH AVE AT PACIFIC HWY EAST (OR99E) (SE MCLOUGHLIN BLVD)
OR99E AT M.P. 5.72
(MILWAUKIE)

	LOOP NUMBER	DISTANCE FEET		PHASE	SLOT
NO WORK	1	EX180		2	12U
	2	EX180		2	12L
	3	EX50	BIKE	2	13U
	4	EX75		5	J1U
	5	EX15			
	6	EX5		5	J9U
	7	EX75		4	16U
	8	EX15			
	9	EX5		4	16L
	10	EX75		4	17U
	11	EX15			
	12	EX5		4	17L
	13	50	BIKE	4	18U
	14	5	BIKE	4	J8U
NO WORK	15	EX180		6	J2U
	16	EX180		6	J2L
	17	EX50	BIKE	6	J3U
	18	EX75		1	11U
	19	EX15			
	20	EX5		1	19U
	21	75		(3)1	15U
	22	15			
	23	5		(3)1	19L
	24	75		8	J6U
	25	15			
	26	5		8	J6L

LOOP DETECTOR WIRING DIAGRAM

"Distance" is from stop line to center of loop in feet
EX-Existing

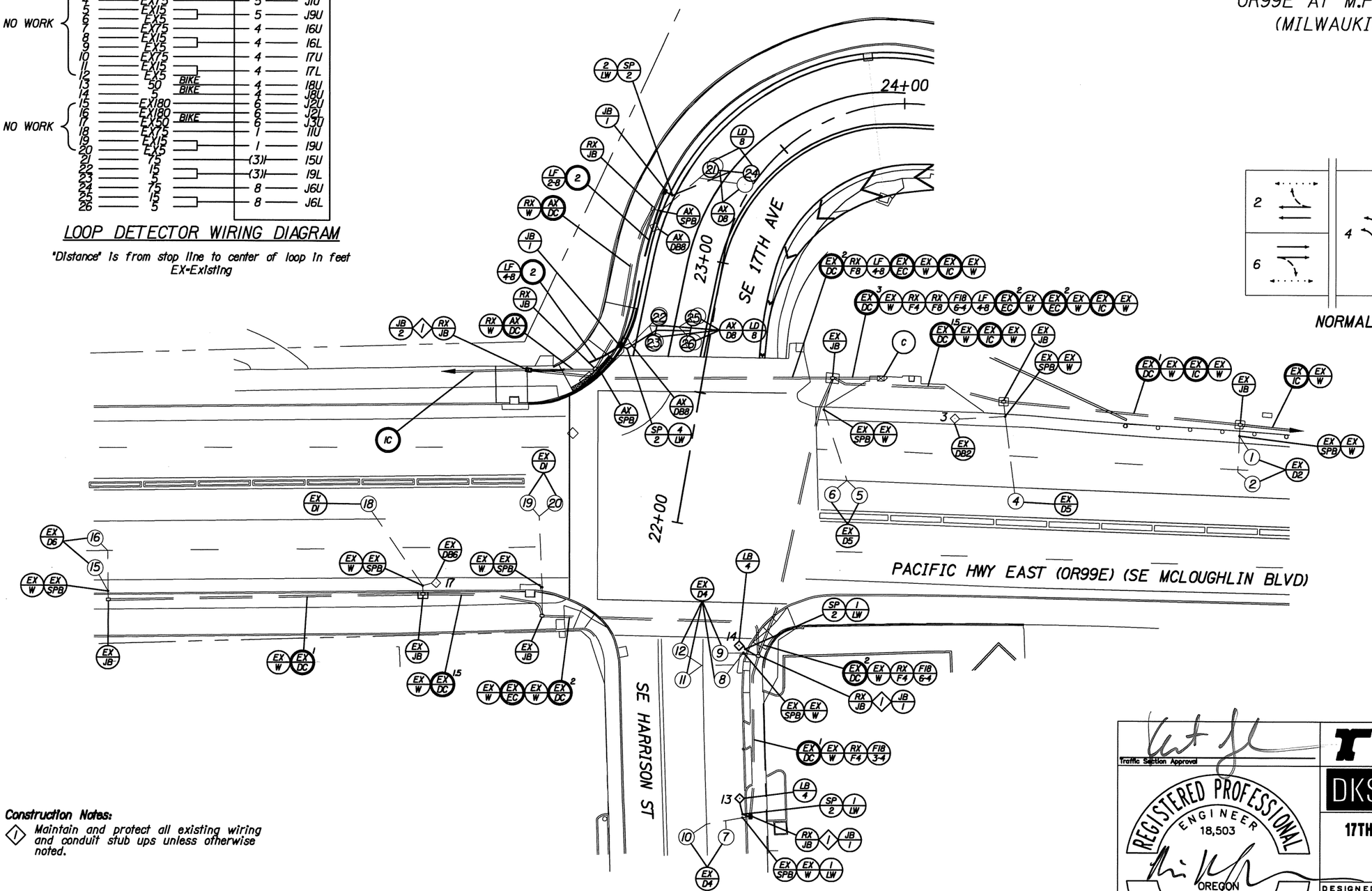

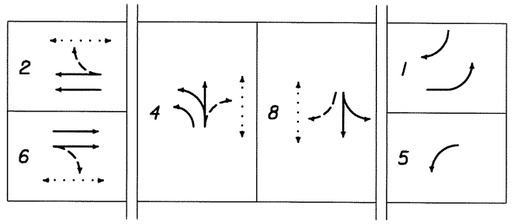

NORMAL PHASE ROTATION

Note:
See City of Milwaukie Dwg. No. 00001 (T.R.S. Dwg. No. 18626) for legend.

Construction Notes:

1. Maintain and protect all existing wiring and conduit stub ups unless otherwise noted.

Note:
Contractor is responsible for re-wiring and re-numbering of new and existing loop detectors and loop feeder cables, in junction boxes and cabinet to match diagrams.

Traffic Section Approval

REGISTERED PROFESSIONAL ENGINEER 18,503 OREGON JULY 10, 1996 BRIAN K. COPELAND

EXPIRES: DEC. 31, 2015

OREGON DEPARTMENT OF TRANSPORTATION

DKS 720 SW Washington Street, Suite 500 Portland, Oregon 97205 (503) 243-3500 www.dksassociates.com

17TH AVE TRAIL: SE OCHOCO - SE MCLOUGHLIN

CITY OF MILWAUKIE
CLACKAMAS COUNTY

DESIGNED BY: K. Svicarovich
REVIEWED BY: B. Copeland
DRAWN BY: M. Zarkas
FC: 081 MP: 5.72

DETECTION MODIFICATION PLAN

CITY OF MILWAUKIE DWG. NO. 00002
TSSU NO. 2B036 T.R.S. DWG. NO. 18627

X:\Projects\2014\P14081-000 (Milwaukie 17th Av Trail)\ACAD\ 00002.dwg

SIGNAL REMOVAL PLAN
SE 17TH AVE AT CLACKAMAS HWY (OR224) (MILWAUKIE EXPWY)
OR224 AT M.P. 0.00
(MILWAUKIE)

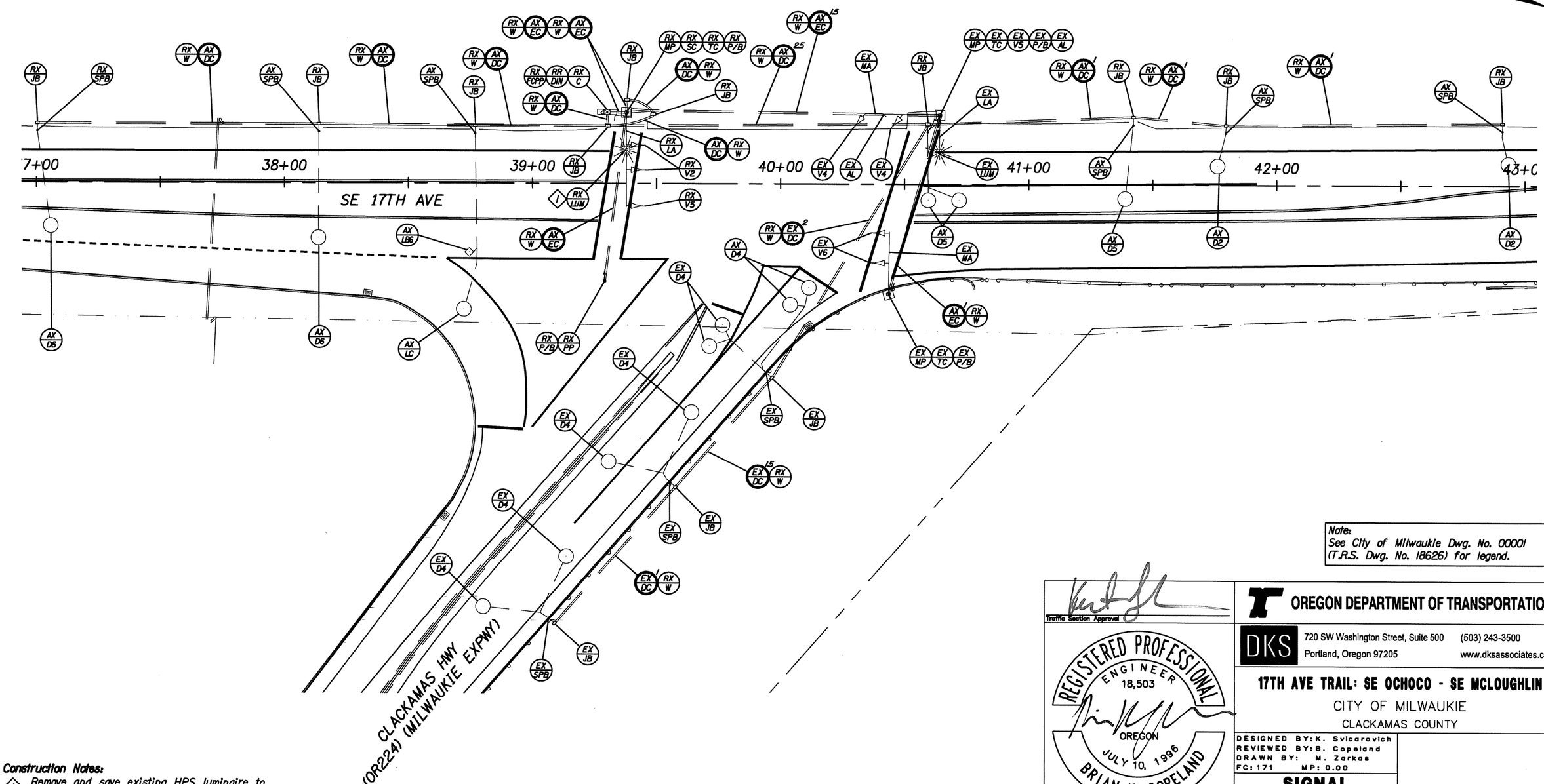

Note:
See City of Milwaukie Dwg. No. 00001
(T.R.S. Dwg. No. 18626) for legend.

Construction Notes:
1. Remove and save existing HPS luminaire to be reinstalled on new luminaire arm.

Traffic Section Approval

REGISTERED PROFESSIONAL ENGINEER 18,503 OREGON JULY 10, 1996 BRIAN K. COPELAND

EXPIRES: DEC. 31, 2015

OREGON DEPARTMENT OF TRANSPORTATION

DKS 720 SW Washington Street, Suite 500 Portland, Oregon 97205 (503) 243-3500 www.dksassociates.com

17TH AVE TRAIL: SE OCHOCO - SE MCLOUGHLIN
CITY OF MILWAUKIE
CLACKAMAS COUNTY

DESIGNED BY: K. Svicarovich
REVIEWED BY: B. Copeland
DRAWN BY: M. Zarkas
FC: 171 MP: 0.00

SIGNAL REMOVAL PLAN

CITY OF MILWAUKIE DWG. NO. 00003
TSSU NO. 2B048 T.R.S. DWG. NO. 18628

X:\Projects\2014\P14081-000 (Milwaukie 17th Av Trail)\ACAD\ 00003.dwg

SIGNAL MODIFICATION PLAN
SE 17TH AVE AT CLACKAMAS HWY (OR224) (MILWAUKIE EXPWY)
OR224 AT M.P. 0.00
(MILWAUKIE)

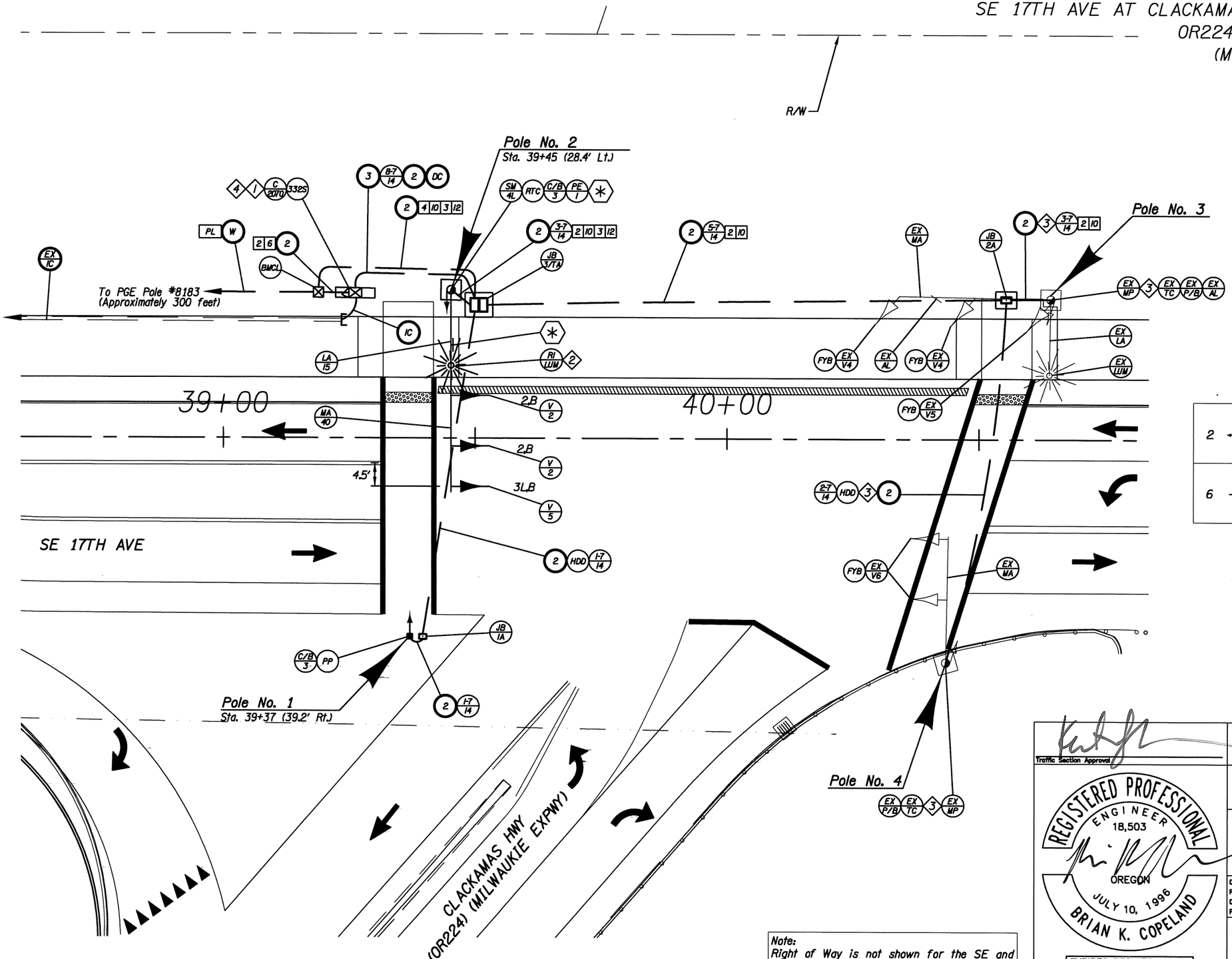

Construction Notes:

1. Install auxiliary output file in controller cabinet.
2. Reinstall existing luminaire on new luminaire arm.
3. Contractor to perform "chip-ins" on existing traffic signal pole foundation to insall larger conduit size denoted in plans.
4. See Interconnect Plan for communications equipment.

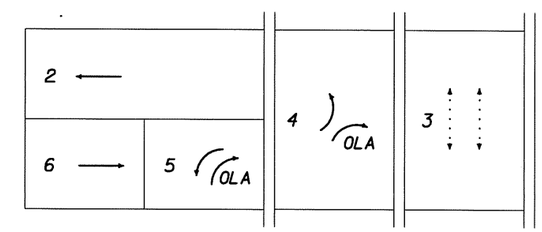

NORMAL PHASE ROTATION
OLA = Ph. 4 + Ph. 5

Note:
See City of Milwaukie Dwg. No. 00001 (T.R.S. Dwg. No. 18626) for legend.

Note:
Right of Way is not shown for the SE and NE quadrants (Outside of Work Area).

Traffic Section Approval

REGISTERED PROFESSIONAL ENGINEER 18,503 OREGON JULY 10, 1996 BRIAN K. COPELAND

EXPIRES: DEC. 31, 2015

OREGON DEPARTMENT OF TRANSPORTATION

DKS 720 SW Washington Street, Suite 500 Portland, Oregon 97205 (503) 243-3500 www.dksassociates.com

17TH AVE TRAIL: SE OCHOCO - SE MCLOUGHLIN

CITY OF MILWAUKIE
CLACKAMAS COUNTY

DESIGNED BY: K. Svicarovich
REVIEWED BY: B. Copeland
DRAWN BY: M. Zarkas
FC: 171 MP: 0.00

SIGNAL MODIFICATION PLAN

CITY OF MILWAUKIE DWG. NO. 00004
TSSU NO. 2B048 T.R.S. DWG. NO. 18629

X:\Projects\2014\P14081-000 (Milwaukie 17th Av Trail)\ACAD\ 00004.dwg

DETECTION MODIFICATION PLAN
SE 17TH AVE AT CLACKAMAS HWY (OR224) (MILWAUKIE EXPWY)
OR224 AT M.P. 0.00
(MILWAUKIE)

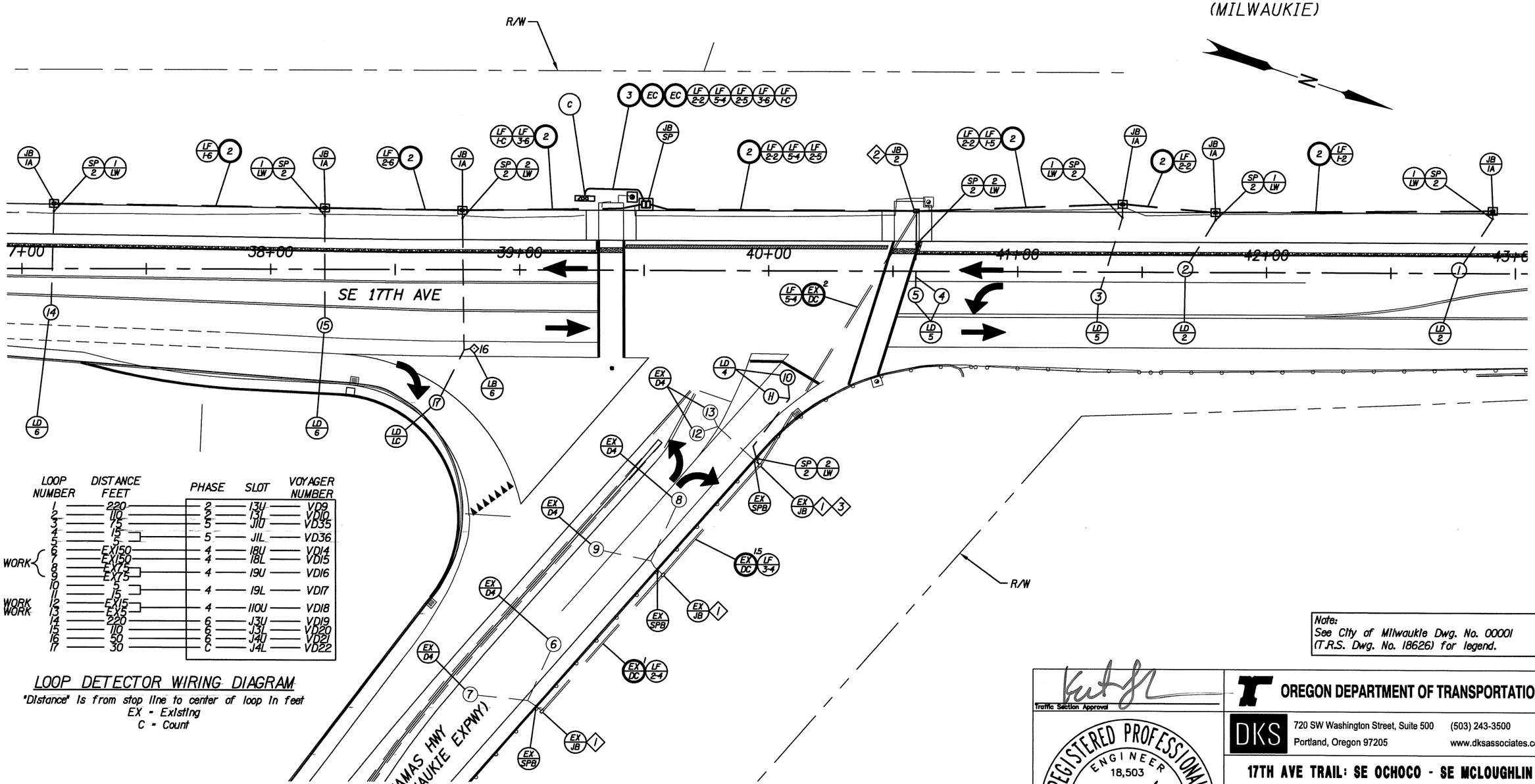

LOOP NUMBER	DISTANCE FEET	PHASE	SLOT	VOYAGER NUMBER
1	220	2	13U	VD9
2	110	2	13L	VD10
3	75	5	J1U	VD35
4	15	5	J1L	VD36
5	5			
6	EX150	4	18U	VD14
7	EX150	4	18L	VD15
8	EX75	4	19U	VD16
9	EX75			
10	5	4	19L	VD17
11	15			
12	EX15	4	110U	VD18
13	EX5			
14	220	6	J3U	VD19
15	110	6	J3L	VD20
16	50	6	J4U	VD21
17	30	C	J4L	VD22

NO WORK (loops 6–9)
NO WORK (loop 12)
NO WORK (loop 13)

LOOP DETECTOR WIRING DIAGRAM

"Distance" is from stop line to center of loop in feet
EX = Existing
C = Count

Note:
Contractor is responsible re-wiring and re-numbering of new and existing loop detectors and loop feeder cables, in junction boxes and cabinet to match existing diagrams.

Note:
Right of Way is not shown for the SE quadrant (Outside of Work Area).

Construction Notes:

1. Connect new loop feeder cables to existing loop wires in junction box.
2. Junction box to be placed outside of shared use path.
3. Install new sand pocket conduit into existing junction box. Maintain and protect all existing conduit in existing junction box.

Note:
See City of Milwaukie Dwg. No. 00001 (T.R.S. Dwg. No. 18626) for legend.

Traffic Section Approval

REGISTERED PROFESSIONAL ENGINEER 18,503 OREGON JULY 10, 1996 BRIAN K. COPELAND

EXPIRES: DEC. 31, 2015

OREGON DEPARTMENT OF TRANSPORTATION

DKS 720 SW Washington Street, Suite 500 Portland, Oregon 97205 (503) 243-3500 www.dksassociates.com

17TH AVE TRAIL: SE OCHOCO - SE MCLOUGHLIN

CITY OF MILWAUKIE
CLACKAMAS COUNTY

DESIGNED BY: K. Svicarovich
REVIEWED BY: B. Copeland
DRAWN BY: M. Zarkos
FC: 171 MP: 0.00

DETECTION MODIFICATION PLAN

CITY OF MILWAUKIE DWG. NO. 00005
TSSU NO. 2B048 T.R.S. DWG. NO. 18630

X:\Projects\2014\P14081-000 (Milwaukie 17th Av Trail)\ACAD\ 00005.dwg

POLE ENTRANCE CHART
SE 17TH AVE AT CLACKAMAS HWY (OR224) (MILWAUKIE EXPWY)
OR224 AT M.P. 0.00
(MILWAUKIE)

POLE ENTRANCE CHART

SEE ODOT STANDARD DRAWINGS TM650 THRU TM653			EQUIPMENT ON POLE						EQUIPMENT ON MAST ARM (Length in feet and equipment type)											FOUNDATION INFORMATION (See ODOT Standard Dwg. No. TM653)		LUMINAIRE				FIXTURES	
POLE NO.	DWG. NO.	TYPE	MAST ARM DEG.	PED. PUSHBUTTON DEG.	PED. SIGNAL DEG.	TERM. CABINET DEG.	SIGN DEG.	SIGNAL DEG.	ARM LENGTH	D1	D2	D3	D4	D5	D6	D7	D8	D9	D10	FOUNDATION NUMBER	REQUIRED FOUNDATION DEPTH*	ARM LENGTH	ARM DEGREE	MOUNTING HEIGHT	TYPE	TYPE	WATTAGE
1	18629	PP		250	170					—	—	—	—	—	—	—	—	—	—								
2	18629	SM4L	0	0	90	180	270		40	1.0 / V3L	9.0 / V2	19.0 / V2	29.0 / SNS	—	—	—	—	—	—	5	17'-0"	15	0	40	EX	EX	EX
3	18629	EXMP	EX	EX	EX	EX	EX	EX	EX	EX / EXV2	EX / EXSA	EX / EXV2	—	—	—	—	—	—	—	EX	EX	EX	EX	EX	EX	EX	EX
4	18629	EXMP	EX	EX	EX	EX			EX	EX / EXV2	EX / EXV2	—	—	—	—	—	—	—	—	EX	EX						

BRACKET MOUNT

V2 - Traffic Signal Type 2, Adjustable Bracket Mount (See Std. Dwg. TM462)
V3L - Traffic Signal Type 3L, Adjustable Bracket Mount (See Std. Dwg. TM462)
3R - Traffic Signal Type 3R, Adjustable Bracket Mount (See Std. Dwg. TM462)
SA - Sign 30"x36" Aluminum w/ Adjustable Bracket Mount (See Std. Dwg. TM465)

MISC. ITEMS

F - Fire Preemption (See Std. Dwg. TM465)
EX - Existing
EXMP - Existing Mast Arm Pole
EXPP - Existing Pedestrian Signal Pedestal
EXPS - Existing Pushbutton Post
PP - Pedestrian Signal Pedestal
PS - Pushbutton Post
III - Type 3 Light Distribution

**Required foundation depth based on structural calculation performed by Harper Hour Peterson Righellis Inc (June 11, 2015 Job Number: MWK-24), which was based on the geotechnical report (Report of Geotechnical Engineering Services by GeoDesign Inc. dated April 20, 2015. GeoDesign Project: ODT-141-01, ODOT Project No. 25490).*

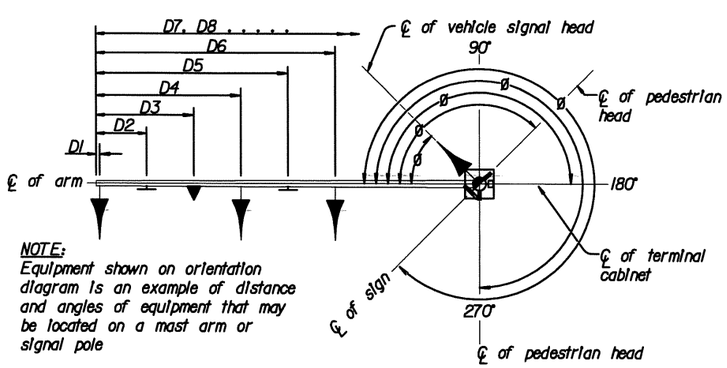

NOTE:
Equipment shown on orientation diagram is an example of distance and angles of equipment that may be located on a mast arm or signal pole

MAST ARM POLE ORIENTATION DIAGRAM

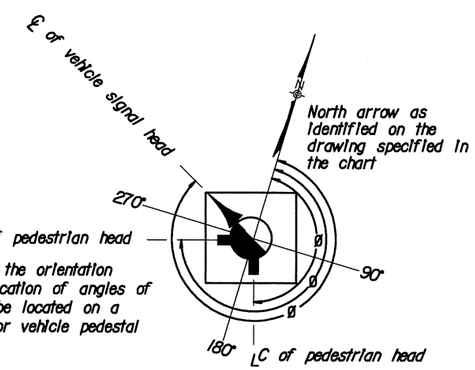

NOTE:
Equipment shown on the orientation diagram is a clarification of angles of equipment that may be located on a pedestrian pedestal or vehicle pedestal

PEDESTRIAN PEDESTAL/VEHICLE PEDESTAL ORIENTATION DIAGRAM

Traffic Section Approval

REGISTERED PROFESSIONAL ENGINEER 18,503 OREGON JULY 10, 1996 BRIAN K. COPELAND

EXPIRES: DEC. 31, 2015

OREGON DEPARTMENT OF TRANSPORTATION

DKS 720 SW Washington Street, Suite 500 Portland, Oregon 97205 (503) 243-3500 www.dksassociates.com

17TH AVE TRAIL: SE OCHOCO - SE MCLOUGHLIN
CITY OF MILWAUKIE
CLACKAMAS COUNTY

DESIGNED BY: K. Svicarovich
REVIEWED BY: B. Copeland
DRAWN BY: M. Zarkas
FC: 171 MP: 0.00

POLE ENTRANCE CHART

CITY OF MILWAUKIE DWG. NO. 00006
TSSU NO. 2B048 T.R.S. DWG. NO. 18631

EXISTING UTILITY PLAN
SE 17TH AVE AT CLACKAMAS HWY (OR224) (MILWAUKIE EXPWY)
OR224 AT M.P. 0.00
(MILWAUKIE)

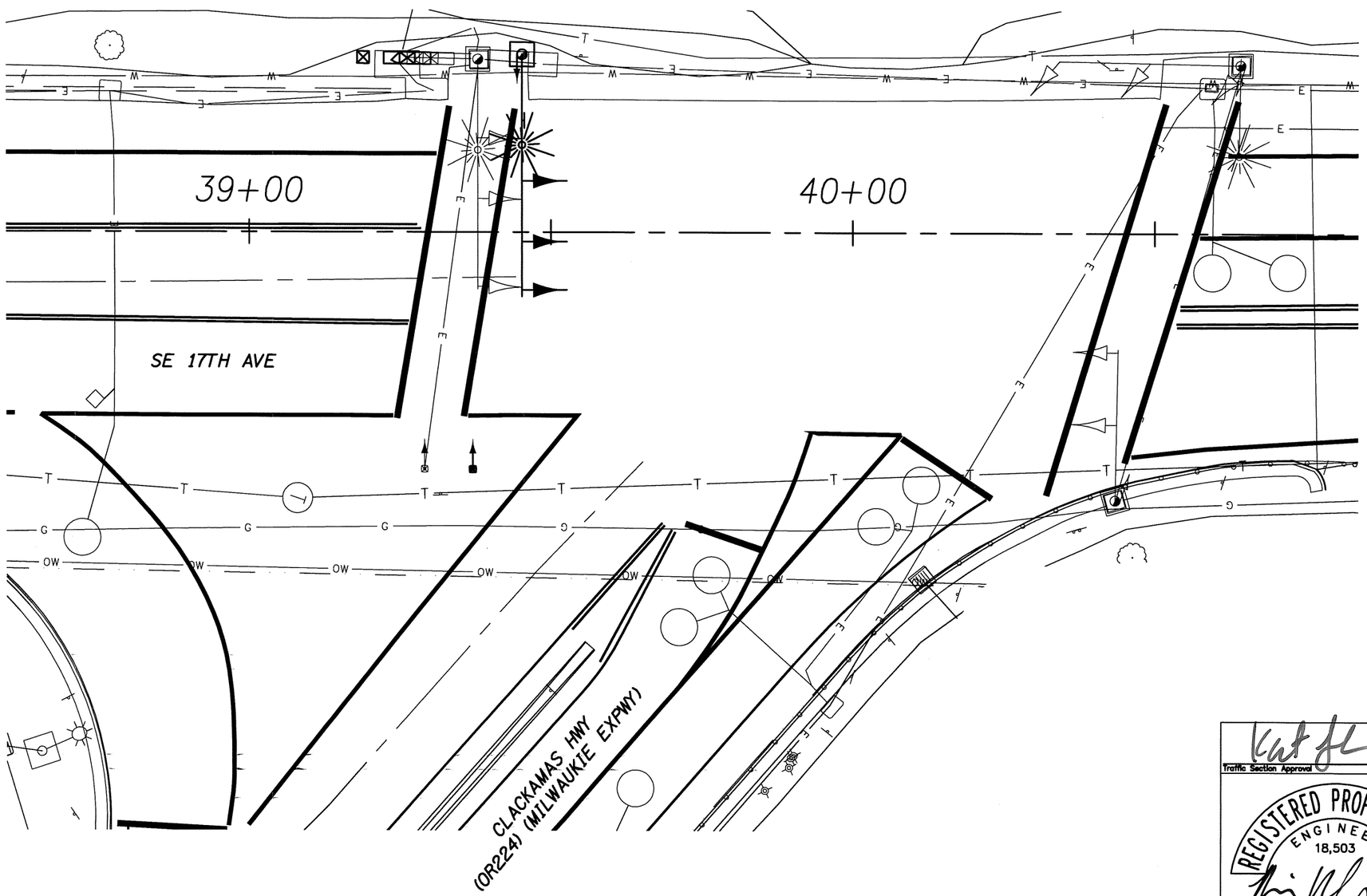

Note:
See City of Milwaukie Dwg. No. 00001
(T.R.S. Dwg. No. 18626) for legend.

Traffic Section Approval

REGISTERED PROFESSIONAL ENGINEER 18,503 OREGON JULY 10, 1996 BRIAN K. COPELAND

EXPIRES: DEC. 31, 2015

OREGON DEPARTMENT OF TRANSPORTATION

DKS 720 SW Washington Street, Suite 500 Portland, Oregon 97205 (503) 243-3500 www.dksassociates.com

17TH AVE TRAIL: SE OCHOCO - SE MCLOUGHLIN
CITY OF MILWAUKIE
CLACKAMAS COUNTY

DESIGNED BY: K. Svicarovich
REVIEWED BY: B. Copeland
DRAWN BY: M. Zarkas
FC: 171 MP: 0.00

EXISTING UTILITY PLAN

CITY OF MILWAUKIE DWG. NO. 00007
TSSU NO. 2B048 T.R.S. DWG. NO. 18632

X:\Projects\2014\P14081-000 (Milwaukie 17th Av Trail)\ACAD\ 00007.dwg

INTERCONNECT PLAN
SE 17TH AVE AT CLACKAMAS HWY (OR224) (MILWAUKIE EXPWY)
OR224 AT M.P. 0.00
(MILWAUKIE)

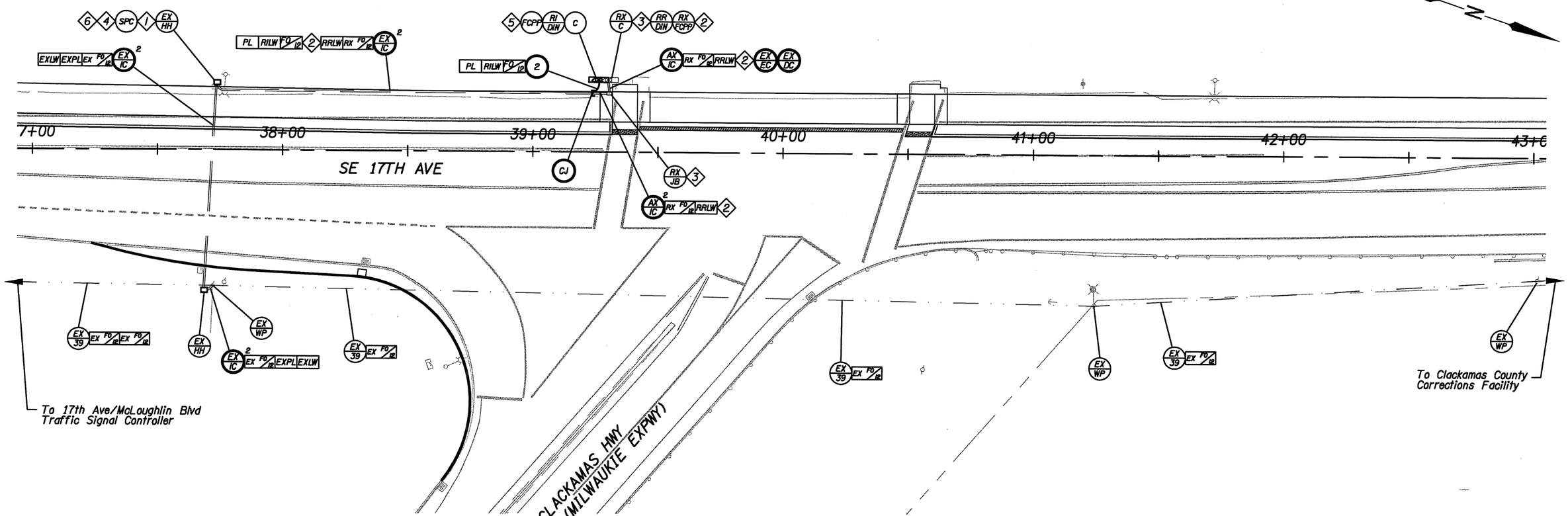

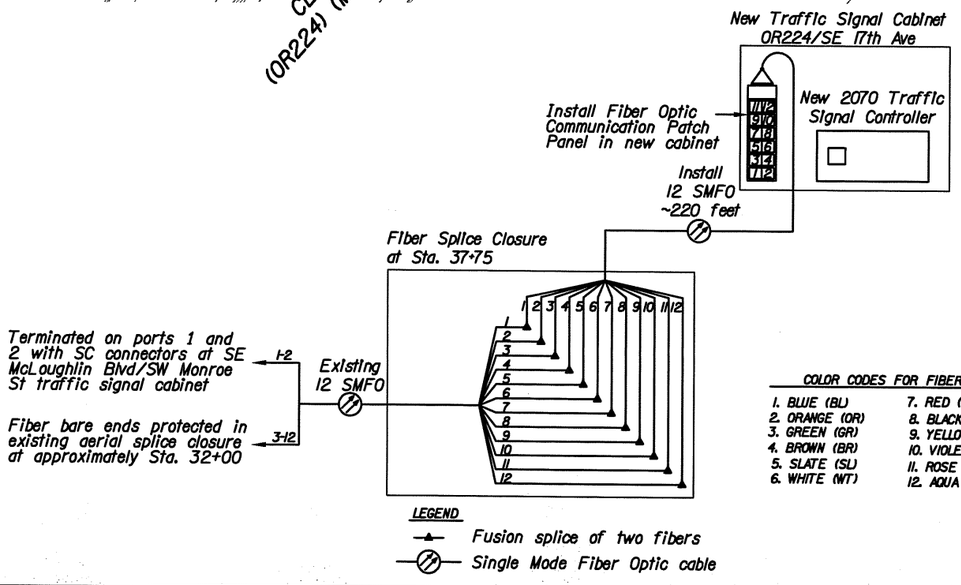

COLOR CODES FOR FIBERS:

1. BLUE (BL)	7. RED (RD)
2. ORANGE (OR)	8. BLACK (BK)
3. GREEN (GR)	9. YELLOW (YL)
4. BROWN (BR)	10. VIOLET (VL)
5. SLATE (SL)	11. ROSE (RS)
6. WHITE (WT)	12. AQUA (AQ)

Note:
See City of Milwaukie Dwg. No. 00001
(T.R.S. Dwg. No. 18626) for legend.

Construction Notes:

1. Sever existing single mode fiber optic cable at midpoint of existing coil. Existing coil is approximately 100 ft. Maintain and protect remaining 50 ft in hand hole.
2. Pull back existing 12 strand single mode fiber optic cable and locate wire from the existing hand hole at approximately Sta. 37+75.
3. See Traffic Signal Removal Plan.
4. Splice existing 12 strand fiber optic cable to reinstalled 12 strand fiber optic cable in hand hole.
5. Furnish and stow two SC-SC duplex single mode fiber optic patch cords in the traffic signal controller cabinet for installation by others.
6. Retain 50 foot coil of 12 strand single mode fiber optic cable on both sides of new splice closure.

Traffic/Section Approval

REGISTERED PROFESSIONAL ENGINEER 72,367 OREGON NOVEMBER 12, 2002 JAMES M. PETERS

EXPIRES: DEC. 31, 2016

OREGON DEPARTMENT OF TRANSPORTATION

DKS 720 SW Washington Street, Suite 500 (503) 243-3500
Portland, Oregon 97205 www.dksassociates.com

17TH AVE TRAIL: SE OCHOCO - SE MCLOUGHLIN

CITY OF MILWAUKIE

CLACKAMAS COUNTY

DESIGNED BY: J. Crain
REVIEWED BY: J. Peters
DRAWN BY: M. Zarkas
FC: 171 MP: 0.00

INTERCONNECT PLAN

O.M.O. DWG. NO. ITS-1879
CITY OF MILWAUKIE DWG. NO. 00008
TSSU NO. 2B048 T.R.S. DWG. NO. 18633

X:\Projects\2014\P14081-000 (Milwaukie 17th Av Trail)\ACAD\ 00008.dwg

INTERCONNECT DETAILS

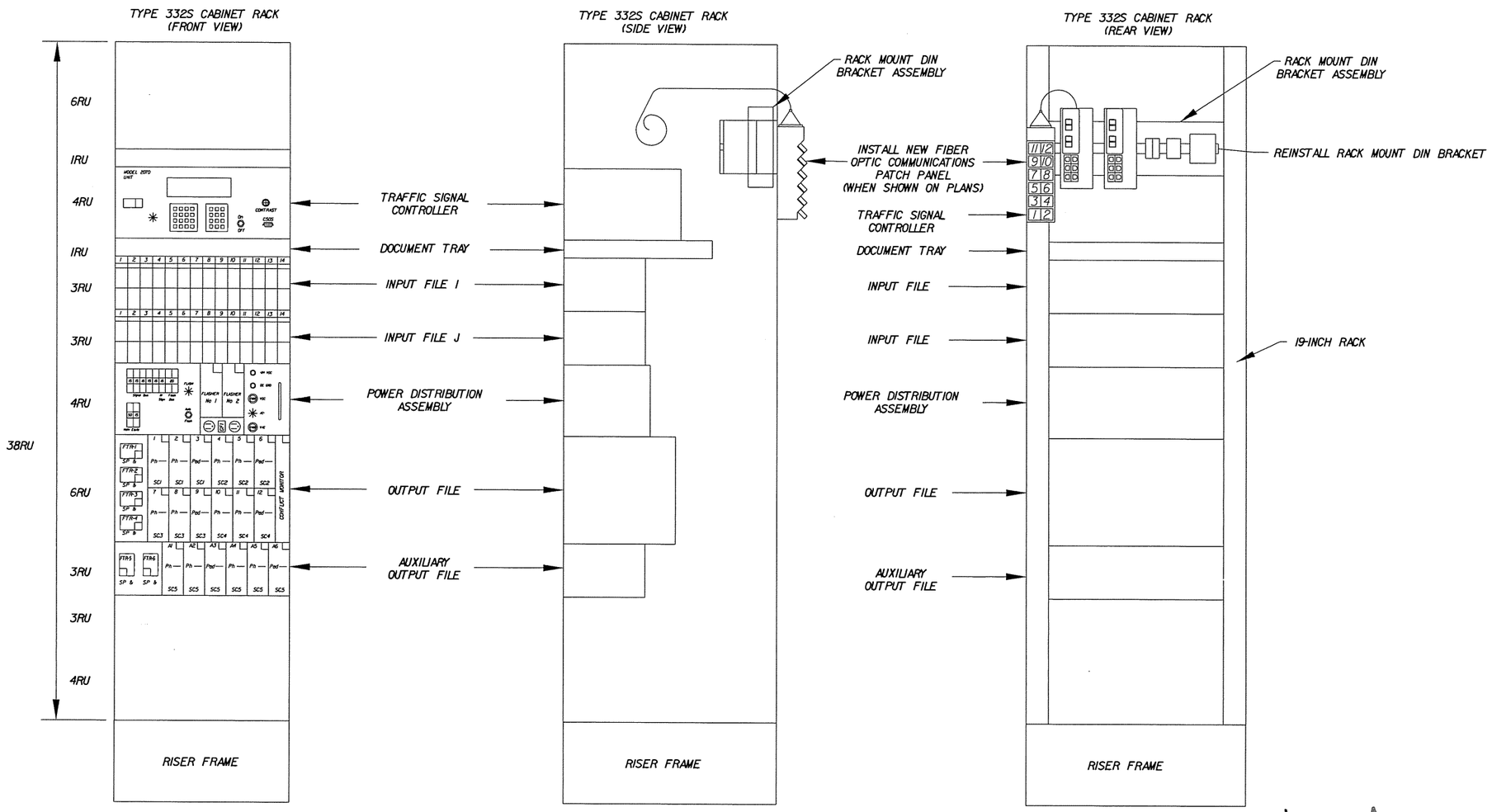

RU = Rack Unit = 1.75"

TYPICAL COMMUNICATIONS EQUIPMENT INSTALLATION IN SIGNAL CABINET LAYOUT

No Scale

Location Notes:

Fiber optic components and their configuration shown for illustration only. See T.R.S. Dwg. No. 18633 for actual equipment to be installed in cabinet.

Traffic Section Approval

REGISTERED PROFESSIONAL ENGINEER 72,367 OREGON NOVEMBER 12, 2002 JAMES M. PETERS

EXPIRES: DEC. 31, 2016

OREGON DEPARTMENT OF TRANSPORTATION

DKS 720 SW Washington Street, Suite 500 Portland, Oregon 97205 (503) 243-3500 www.dksassociates.com

17TH AVE TRAIL: SE OCHOCO - SE MCLOUGHLIN

CITY OF MILWAUKIE

CLACKAMAS COUNTY

DESIGNED BY: J. Crain
REVIEWED BY: J. Peters
DRAWN BY: M. Zarkas
FC: N/A MP: N/A

INTERCONNECT DETAILS

O.M.O. DWG. NO. ITS-1880
CITY OF MILWAUKIE DWG. NO. 00009
TSSU NO. _____ T.R.S. DWG. NO. 18634

X:\Projects\2014\P14081-000 (Milwaukie 17th Av Trail)\ACAD\ 00009.dwg

SIGNAL REMOVAL PLAN
SE 17TH AVE AT WAVERLY DR/SE MILPORT RD
(MILWAUKIE)

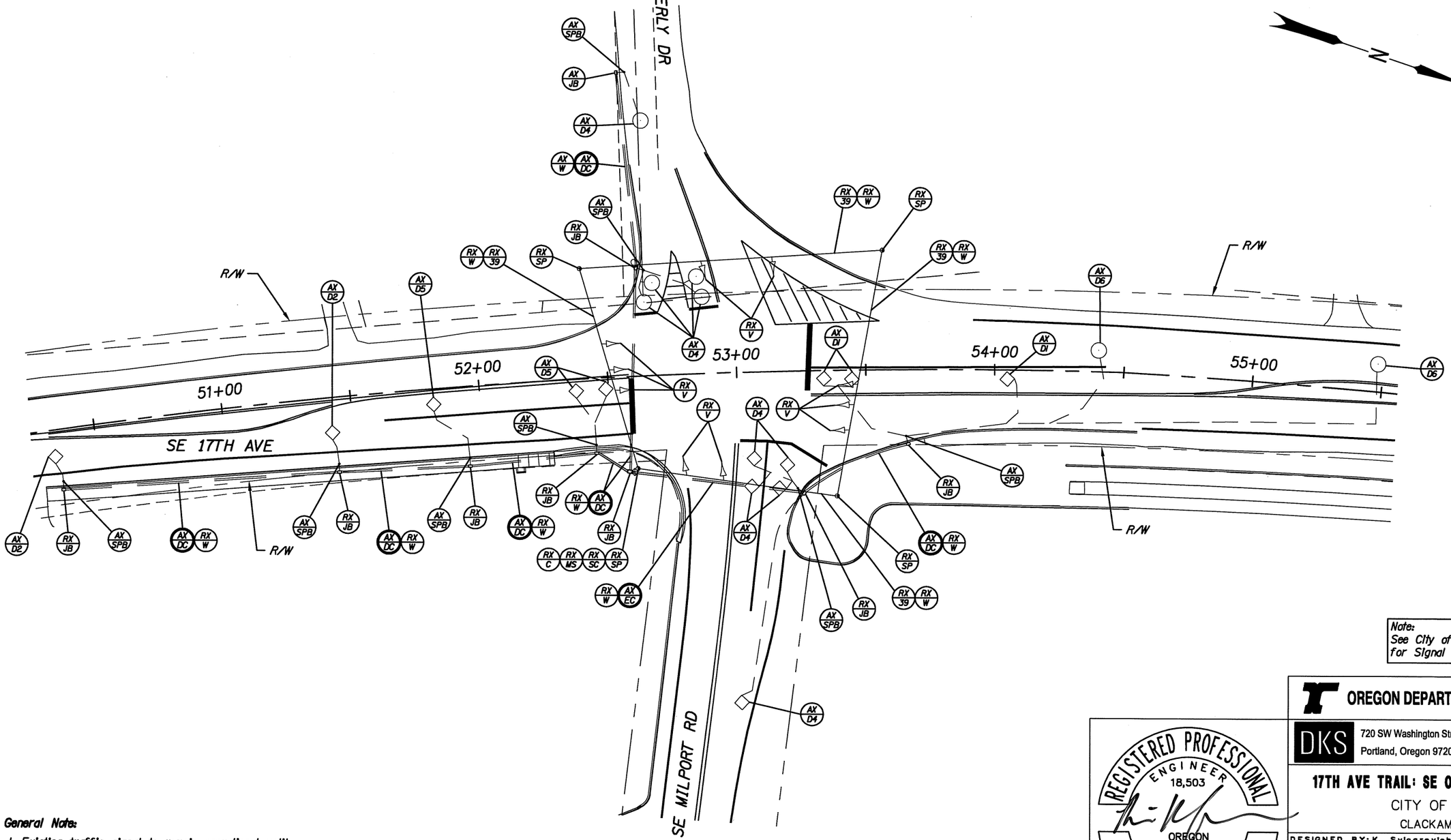

Note:
See City of Milwaukie Dwg. No. 00001 for Signal Plan Legend.

General Note:

1. Existing traffic signal to remain operational until new system is installed.

"UTILITIES NOT SHOWN"
See Utility Plan sheet

REGISTERED PROFESSIONAL ENGINEER 18,503 OREGON JULY 10, 1996 BRIAN K. COPELAND

EXPIRES: DEC. 31, 2015

OREGON DEPARTMENT OF TRANSPORTATION

DKS 720 SW Washington Street, Suite 500 Portland, Oregon 97205 (503) 243-3500 www.dksassociates.com

17TH AVE TRAIL: SE OCHOCO - SE MCLOUGHLIN

CITY OF MILWAUKIE
CLACKAMAS COUNTY

DESIGNED BY: K. Svicarovich
REVIEWED BY: B. Copeland
DRAWN BY: M. Zarkas
FC: 171 MP: 0.00

SIGNAL REMOVAL PLAN

CITY OF MILWAUKIE DWG. NO. 00010

TSSU NO. _____ T.R.S. DWG. NO. _____

X:\Projects\2014\P14081-000 (Milwaukie 17th Av Trail)\ACAD\ 00010.dwg

SIGNAL PLAN
SE 17TH AVE AT SE WAVERLY DR/SE MILPORT RD

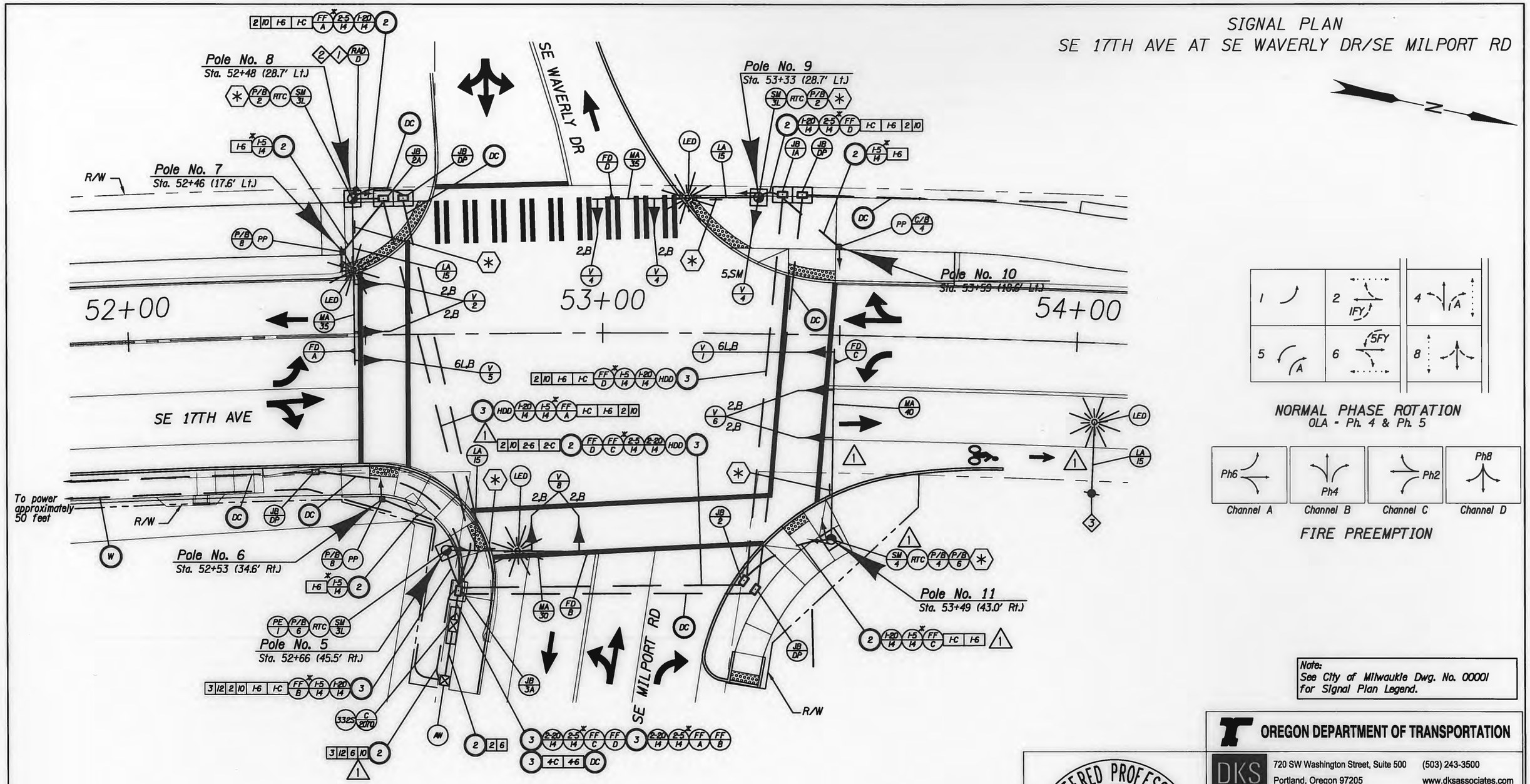

Note:
See City of Milwaukie Dwg. No. 00001 for Signal Plan Legend.

Construction Notes:

1. Radar detector shall be calibrated in the field by the Engineer and Wavetronix representative. See Dwg. No. 00012 for detector zones.
2. Location of radar attachment on pole shall be verified by Wavetronix representative prior to installation.
3. Remove existing luminaire arm and luminaire fixture. Install new 15 ft. luminaire arm and 105W cobra head fixture mounted at approximately 28 ft. on existing PGE utility pole No. 6729. Work to be completed by PGE. Contact Brent Baldwin, PGE (503-736-5470), and give three weeks notice to initiate work.

Rev. No.	Description	Date	Engineer
1	Remove luminare from Pole No. 11, Install new luminaire and arm on PGE utility pole No. 6729	2/18/16	B. Copeland

REGISTERED PROFESSIONAL ENGINEER 18,503 OREGON JULY 10, 1996 BRIAN K. COPELAND

EXPIRES: DEC. 31, 2017

OREGON DEPARTMENT OF TRANSPORTATION

DKS 720 SW Washington Street, Suite 500 Portland, Oregon 97205 (503) 243-3500 www.dksassociates.com

17TH AVE TRAIL: SE OCHOCO - SE MCLOUGHLIN

CITY OF MILWAUKIE

CLACKAMAS COUNTY

DESIGNED BY: K. Svicarovich
REVIEWED BY: B. Copeland
DRAWN BY: M. Zarkas
FC: N/A MP: N/A

SIGNAL PLAN

CITY OF MILWAUKIE DWG. NO. 00011

TSSU NO. _____ T.R.S. DWG. NO. _____

X:\Projects\2014\P14081-000 (Milwaukie 17th Av Trail)\ACAD\ 00011.dwg

DETECTOR PLAN
SE 17TH AVE AT SE WAVERLY DR/SE MILPORT RD

DETECTION LAYOUT DIAGRAM

1	2	3	4	5	6	7	8	9	10	
										"I" File Slot
										Device
										(D)
										Phase - T Voyage Detector
										Phase - T Voyage Detector
										(D)
1	2	3	4	5	6	7	8	9	10	"J" File Slot
							RADAR-D			Device
							75'			(D)
							ø8-D VD24			Phase - T Voyage Detector
							VD25 ø8-D			Phase - T Voyage Detector
							10'			(D)

T - Camera
(D) - Distance from stopbar to center of detection zone (Feet)

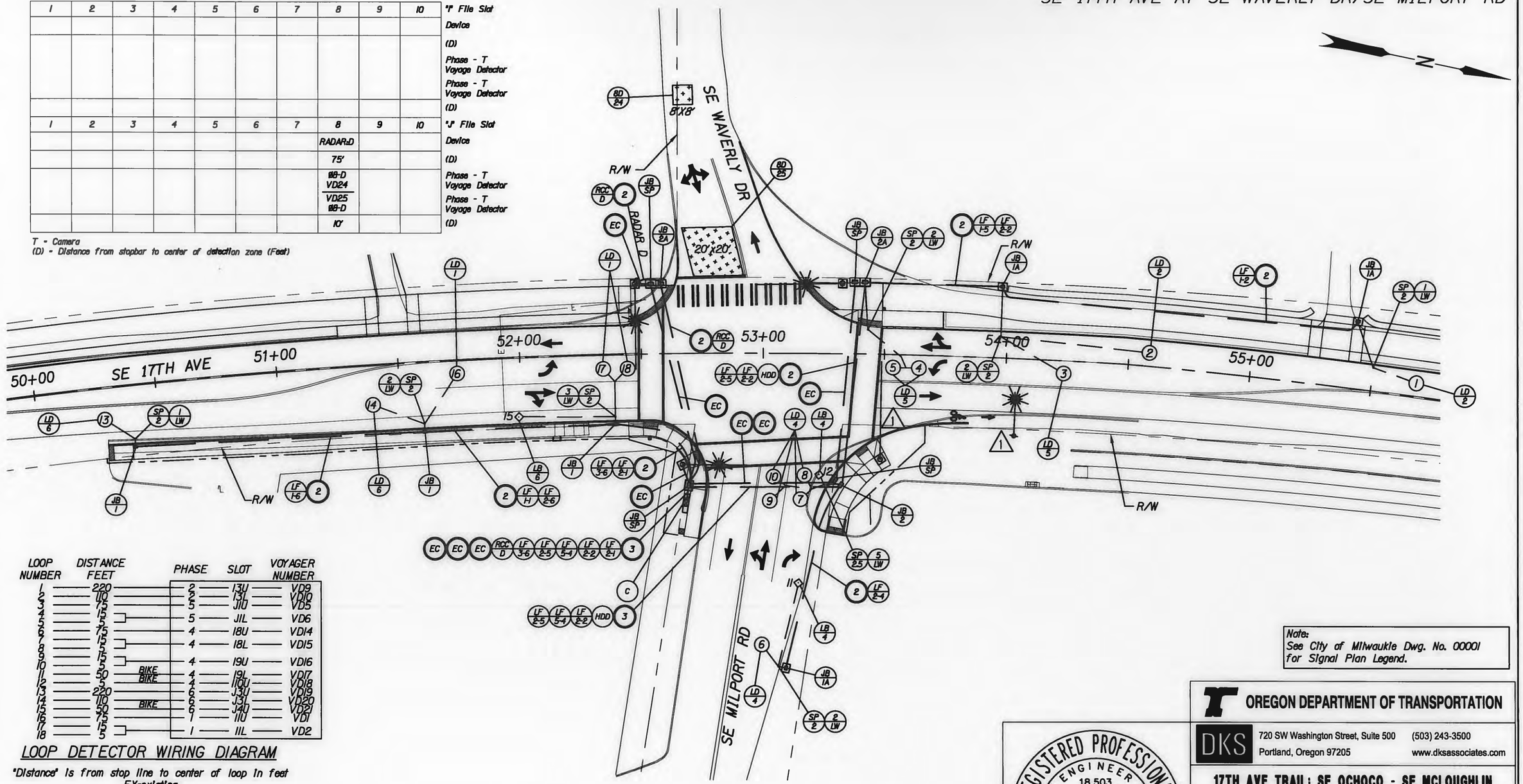

LOOP NUMBER	DISTANCE FEET		PHASE	SLOT	VOYAGER NUMBER
1	220		2	13U	VD9
2	110		2	13L	VD10
3	75		5	J1U	VD5
4	15		5	J1L	VD6
5	5				
6	75		4	18U	VD14
7	15		4	18L	VD15
8	5				
9	15		4	19U	VD16
10	5				
11	50	BIKE	4	19L	VD17
12	5	BIKE	4	110U	VD18
13	220		6	J3U	VD19
14	110	BIKE	6	J3L	VD20
15	50		6	J4U	VD21
16	75		1	11U	VD1
17	15				
18	5		1	11L	VD2

LOOP DETECTOR WIRING DIAGRAM

"Distance" is from stop line to center of loop in feet
EX-existing

Note:
See City of Milwaukie Dwg. No. 00001 for Signal Plan Legend.

Note:
Contractor is responsible re-wiring and re-numbering of new and existing loop detectors and loop feeder cables, in junction boxes and cabinet to match existing diagrams.

Rev. No.	Description	Date	Engineer
1	Remove luminare from Pole No. 11, Install new luminaire and arm on PGE utility pole No. 6729	2/18/16	B. Copeland

REGISTERED PROFESSIONAL ENGINEER 18,503 OREGON JULY 10, 1996 BRIAN K. COPELAND
EXPIRES: DEC. 31, 2017

OREGON DEPARTMENT OF TRANSPORTATION

DKS 720 SW Washington Street, Suite 500 Portland, Oregon 97205 (503) 243-3500 www.dksassociates.com

17TH AVE TRAIL: SE OCHOCO - SE MCLOUGHLIN
CITY OF MILWAUKIE
CLACKAMAS COUNTY

DESIGNED BY: K. Svicarovich
REVIEWED BY: B. Copeland
DRAWN BY: M. Zarkos
FC: N/A MP: N/A

DETECTOR PLAN

CITY OF MILWAUKIE DWG. NO. 00012
TSSU NO. _____ T.R.S. DWG. NO. _____

X:\Projects\2014\P14081-000 (Milwaukie 17th Av Trail)\ACAD\ 00012.dwg

POLE ENTRANCE CHART
SE 17TH AVE AT SE WAVERLY DR/SE MILPORT RD
(MILWAUKIE)

POLE ENTRANCE CHART

SEE ODOT STANDARD DRAWINGS TM650 THRU TM653			EQUIPMENT ON POLE									EQUIPMENT ON MAST ARM (Length in feet and equipment type)												FOUNDATION INFORMATION (See ODOT Standard Dwg. No. TM653)		LUMINAIRE				FIXTURES	
POLE NO.	DWG. NO.	TYPE	MAST ARM DEG.	PED. PUSHBUTTON DEG.	PED. SIGNAL DEG.	PUSHBUTTON ARROW	TERM. CABINET DEG.	SIGN DEG.	SIGNAL DEG.	RADAR DETECTOR	PHOTO ELECTRIC CELL	ARM LENGTH	D1	D2	D3	D4	D5	D6	D7	D8	D9	D10	FOUNDATION NUMBER	REQUIRED FOUNDATION DEPTH *	ARM LENGTH	ARM DEGREE	MOUNTING HEIGHT	TYPE	TYPE	** WATTAGE
5	00011	SM3L	0	270	270	LT	90				180	30	0.5 / F	2.0 / V2	12.0 / V2	21.0 / SNS	—	—	—	—	—	—	4 △1	14'-0"	15	0	30 △1	LED	II	105W
6	00011	PP		345	345	RT							—	—	—	—	—	—	—	—	—	—								
7	00011	PP		345	345	LT							—	—	—	—	—	—	—	—	—	—								
8	00011	SM3L	0	0	0	RT	0	270		200		35	1.0 / V6L	3.0 / F	7.0 / V2	17.0 / V2	29.0 / SNS	—	—	—	—	—	4 △1	14'-0"	15	0	35	LED	II	105W
9	00011	SM3L	0	270	270	LT	0	270	280			35	1.0 / V2	4.0 / F	13.0 / V2	26.0 / SNS	—	—	—	—	—	—	4 △1	14'-0"	15	0	35	LED	II	105W
10	00011	PP											—	—	—	—	—	—	—	—	—	—								
11	00011	SM4	0	0/270	0/270	RT/LT	180	270				40	0.5 / V6L	4.0 / F	8.0 / V2	18.0 / V2	29.0 / SNS	—	—	—	—	—	4 △1	14'-0"							△1

BRACKET MOUNT △1

V2 - Traffic Signal Type 2, Adjustable Bracket Mount (See Std. Dwg. TM462)
V6L - Traffic Signal Type 6L, Adjustable Bracket Mount (See Std. Dwg. TM462)

MISC. ITEMS

F - Fire preemption (See Std. Dwg. TM465)
PP - Pedestrian Signal Pedestal
II - Type 2 Light Distribution
SNS - Street Name Sign, See Signing Plans

*Required foundation depth based on structural calculation performed by Harper Hour Peterson Righellis Inc (June 11, 2015 Job Number: MWK-24), which was based on the geotechnical report (Report of Geotechnical Engineering Services by GeoDesign Inc. dated April 20, 2015. GeoDesign Project: ODT-141-01, ODOT Project No. 25490).

**LEOTEK Green Cobra LED, GCI-60F-MV-NW-2-GY-530-2L, or approved equal.

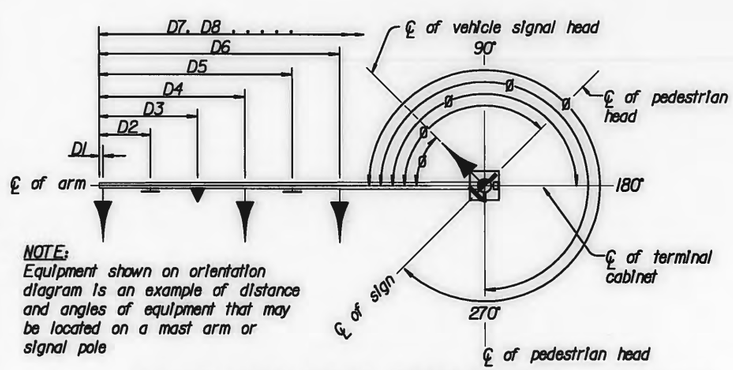

NOTE:
Equipment shown on orientation diagram is an example of distance and angles of equipment that may be located on a mast arm or signal pole

MAST ARM POLE ORIENTATION DIAGRAM

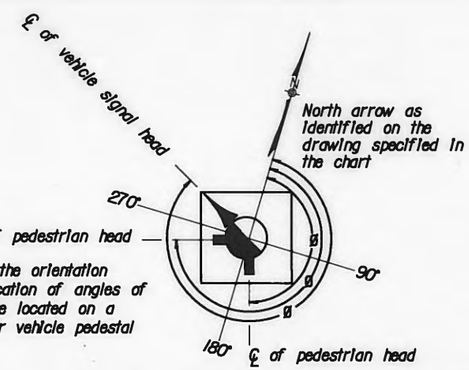

NOTE:
Equipment shown on the orientation diagram is a clarification of angles of equipment that may be located on a pedestrian pedestal or vehicle pedestal

PEDESTRIAN PEDESTAL/VEHICLE PEDESTAL ORIENTATION DIAGRAM

Rev. No.	Description	Date	Engineer
△1	Remove luminare from Pole No. 11, Install new luminaire and arm on PGE utility pole No. 6729. Update foundation numbers.	2/18/16	B. Copeland

REGISTERED PROFESSIONAL ENGINEER 18,503 OREGON JULY 10, 1996 BRIAN K. COPELAND
EXPIRES: DEC. 31, 2017

OREGON DEPARTMENT OF TRANSPORTATION

DKS 720 SW Washington Street, Suite 500 Portland, Oregon 97205 (503) 243-3500 www.dksassociates.com

17TH AVE TRAIL: SE OCHOCO - SE MCLOUGHLIN
CITY OF MILWAUKIE
CLACKAMAS COUNTY

DESIGNED BY: K. Svicarovich
REVIEWED BY: B. Copeland
DRAWN BY: M. Zarkos
FC: N/A MP: N/A

POLE ENTRANCE CHART

CITY OF MILWAUKIE DWG. NO. 00013
TSSU NO. _____ T.R.S. DWG. NO. _____

X:\Projects\2014\P14081-000 (Milwaukie 17th Av Trail)\ACAD\ 00013.dwg

EXISTING UTILITY PLAN
SE 17TH AVE AT SE WAVERLY DR/SE MILPORT RD

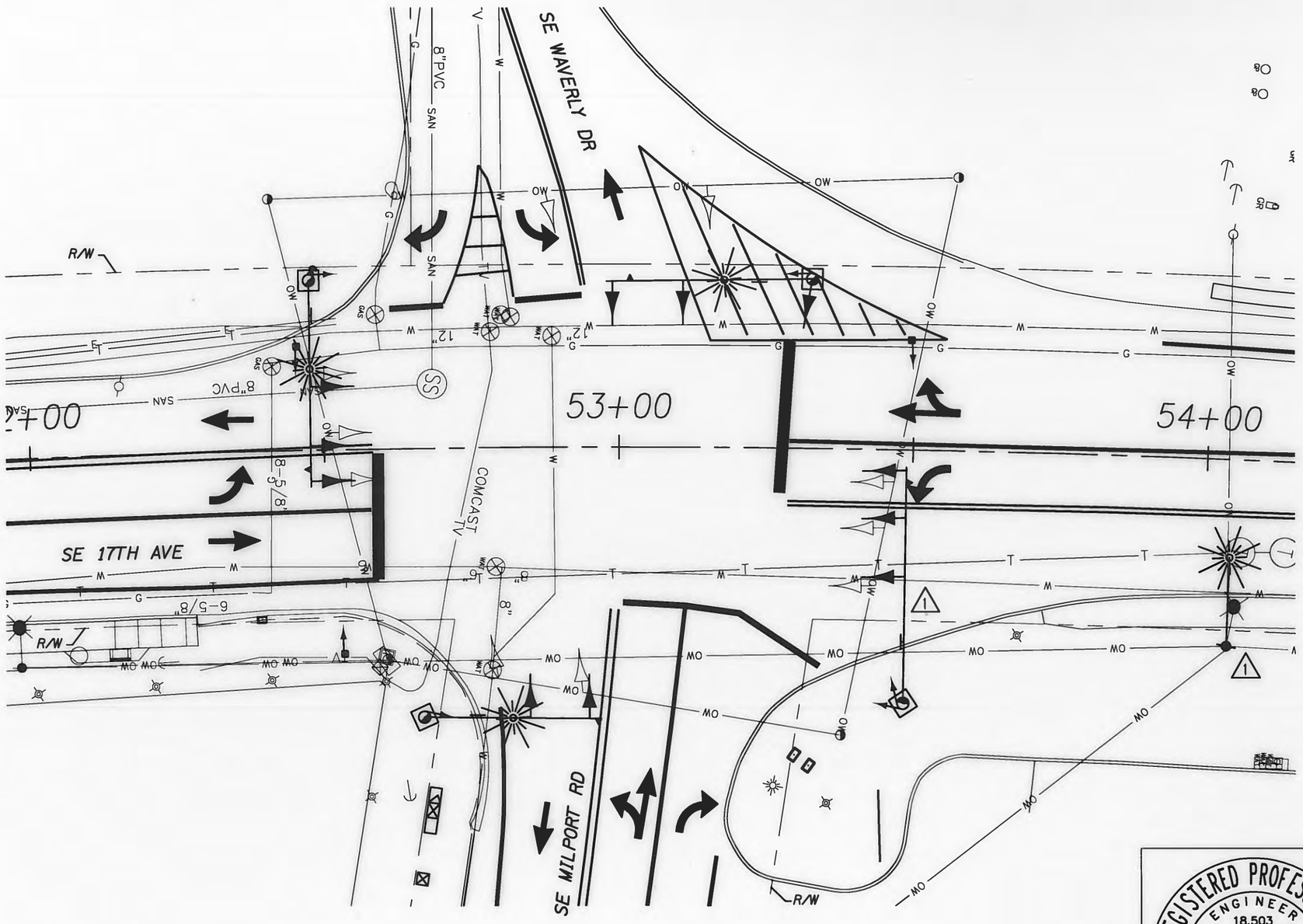

Note:
See City of Milwaukie Dwg. No. 00001 for Signal Plan Legend.

REGISTERED PROFESSIONAL ENGINEER 18,503 OREGON JULY 10, 1996 BRIAN K. COPELAND
EXPIRES: DEC. 31, 2017

OREGON DEPARTMENT OF TRANSPORTATION

DKS 720 SW Washington Street, Suite 500 Portland, Oregon 97205 (503) 243-3500 www.dksassociates.com

17TH AVE TRAIL: SE OCHOCO - SE MCLOUGHLIN
CITY OF MILWAUKIE
CLACKAMAS COUNTY

DESIGNED BY: K. Svicarovich
REVIEWED BY: B. Copeland
DRAWN BY: M. Zarkas
FC: N/A MP: N/A

EXISTING UTILITY PLAN

CITY OF MILWAUKIE DWG. NO. 00014
TSSU NO. _____ T.R.S. DWG. NO. _____

Rev. No.	Description	Date	Engineer
1	Remove luminare from Pole No. 11, Install new luminaire and arm on PGE utility pole No. 6729	2/18/16	B. Copeland

X:\Projects\2014\P14081-000 (Milwaukie 17th Av Trail)\ACAD\ 00014.dwg

SIGNAL DETAILS

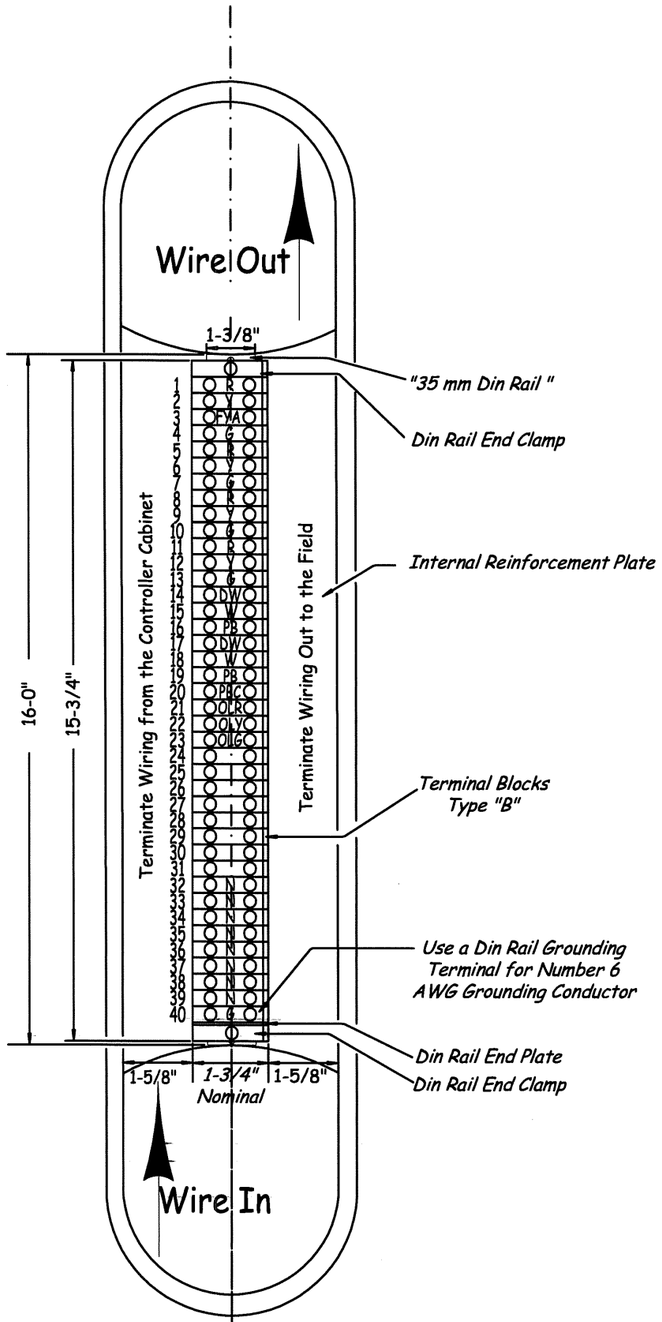

Front View

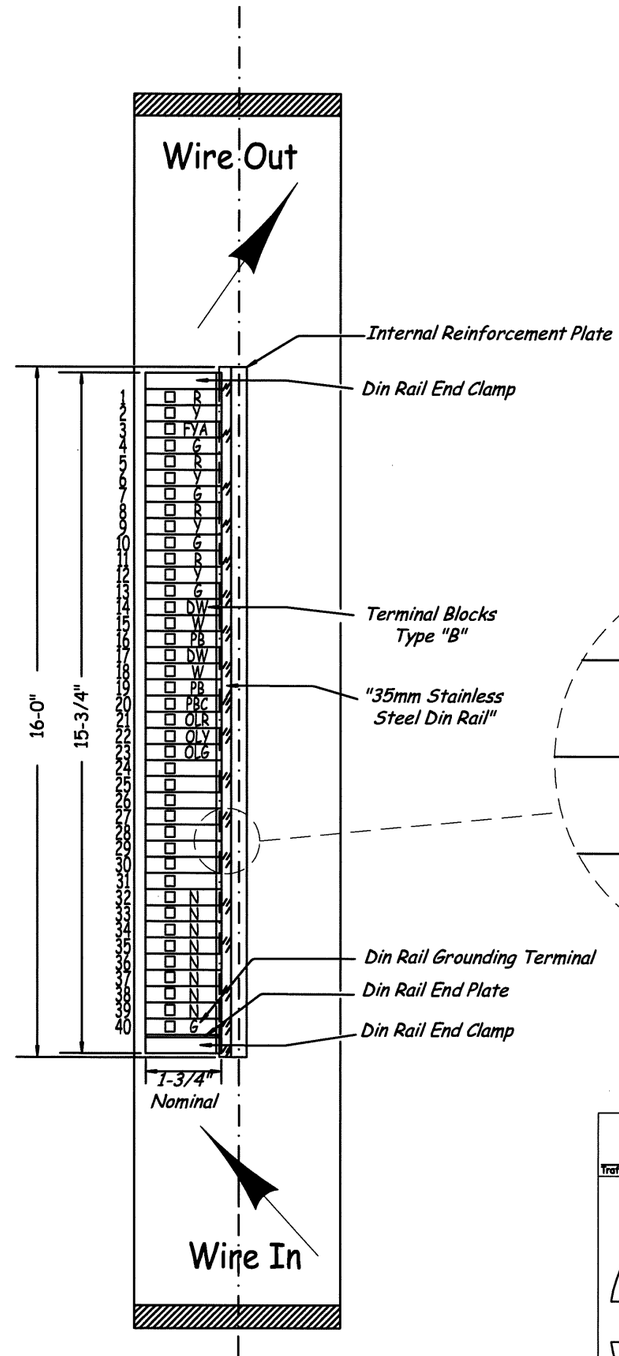

(Cross section)
Side View

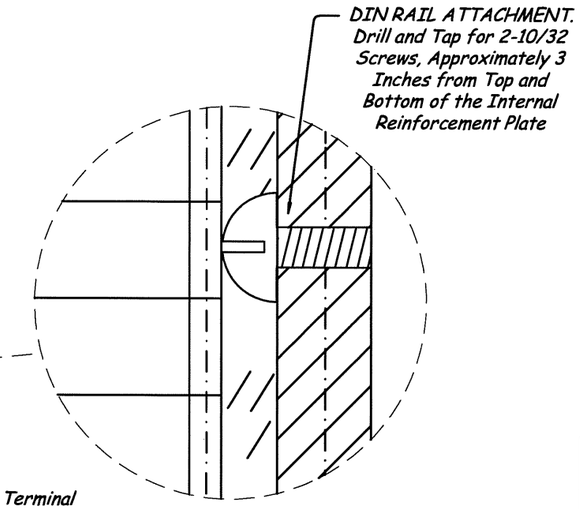

Din Rail Mounting Detail

NOTE:

See T.R.S. Dwg. No. 18636 for Integrated Terminal Cabinet Dimensions.

Traffic Section Approval

REGISTERED PROFESSIONAL ENGINEER 18,503 OREGON JULY 10, 1996 BRIAN K. COPELAND

EXPIRES: DEC. 31, 2015

OREGON DEPARTMENT OF TRANSPORTATION

DKS 720 SW Washington Street, Suite 500 Portland, Oregon 97205 (503) 243-3500 www.dksassociates.com

17TH AVE TRAIL: SE OCHOCO - SE MCLOUGHLIN

CITY OF MILWAUKIE

CLACKAMAS COUNTY

DESIGNED BY: K. Svicarovich
REVIEWED BY: B. Copeland
DRAWN BY: M. Zarkas
FC: Varies MP: Varies

SIGNAL DETAILS

CITY OF MILWAUKIE DWG. NO. 00015

TSSU NO. _____ T.R.S. DWG. NO. 18635

X:\Projects\2014\P14081-000 (Milwaukie 17th Av Trail)\ACAD\ 00015.dwg

SIGNAL DETAILS

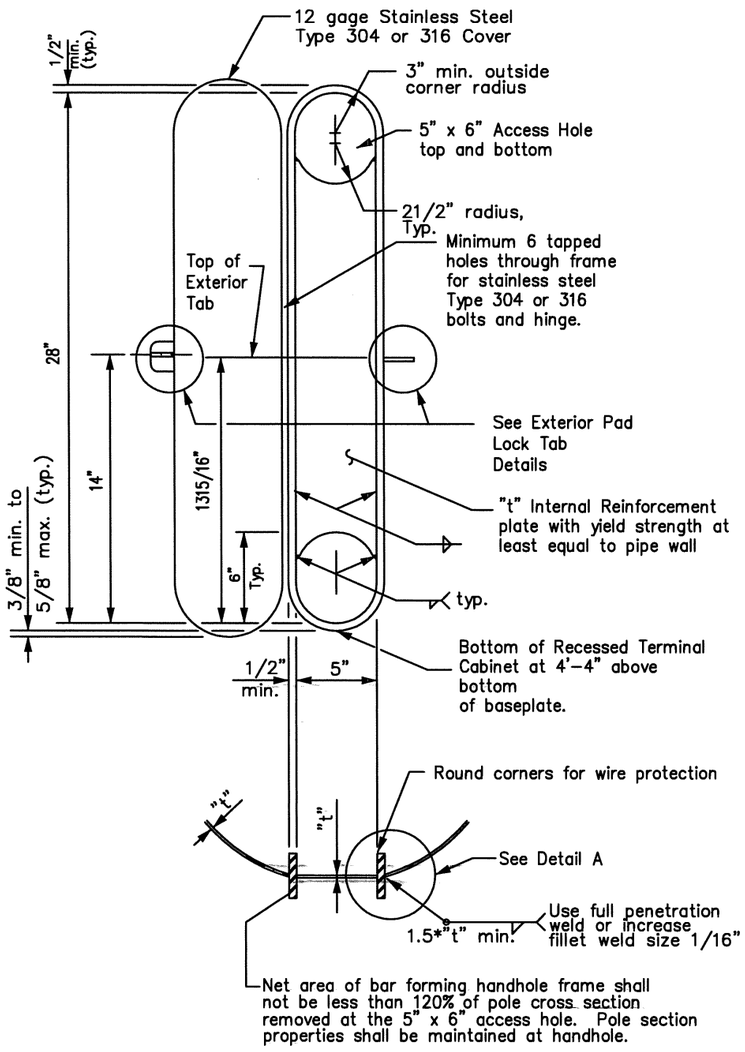

RECESSED TERMINAL CABINET DETAIL
No scale

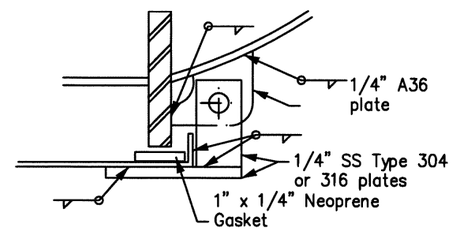

SECTION A–A
No scale

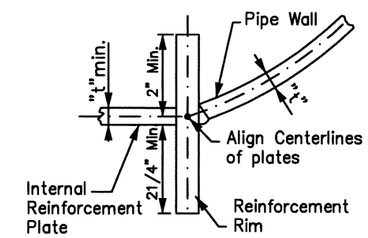

DETAIL A
No scale

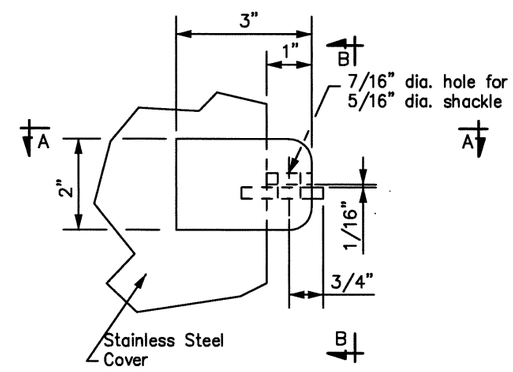

EXTERIOR PAD LOCK DETAILS
No scale

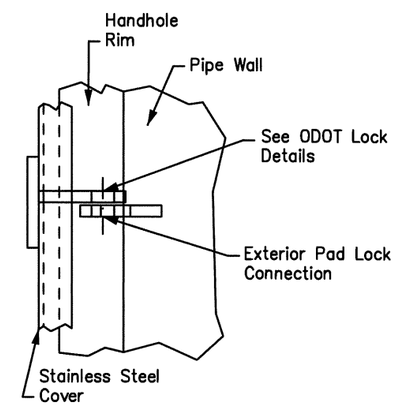

SECTION B–B
No scale

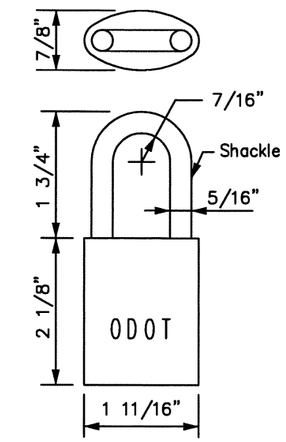

ODOT LOCK DETAILS
No scale
(ODOT Supplied Post Construction)

Traffic Section Approval

REGISTERED PROFESSIONAL ENGINEER 18,503 OREGON JULY 10, 1996 BRIAN K. COPELAND

EXPIRES: DEC. 31, 2015

OREGON DEPARTMENT OF TRANSPORTATION

DKS 720 SW Washington Street, Suite 500 Portland, Oregon 97205 (503) 243-3500 www.dksassociates.com

17TH AVE TRAIL: SE OCHOCO - SE MCLOUGHLIN

CITY OF MILWAUKIE
CLACKAMAS COUNTY

DESIGNED BY: K. Svicarovich
REVIEWED BY: B. Copeland
DRAWN BY: M. Zarkos
FC: Varies MP: Varies

SIGNAL DETAILS

CITY OF MILWAUKIE DWG. NO. 00016
TSSU NO. _____ T.R.S. DWG. NO. 18636

X:\Projects\2014\P14081-000 (Milwaukie 17th Av Trail)\ACAD\ 00016.dwg

SIGNAL DETAILS

NEMA 3-R METERED BASE MOUNT SERVICE CABINET CLACKAMAS COUNTY

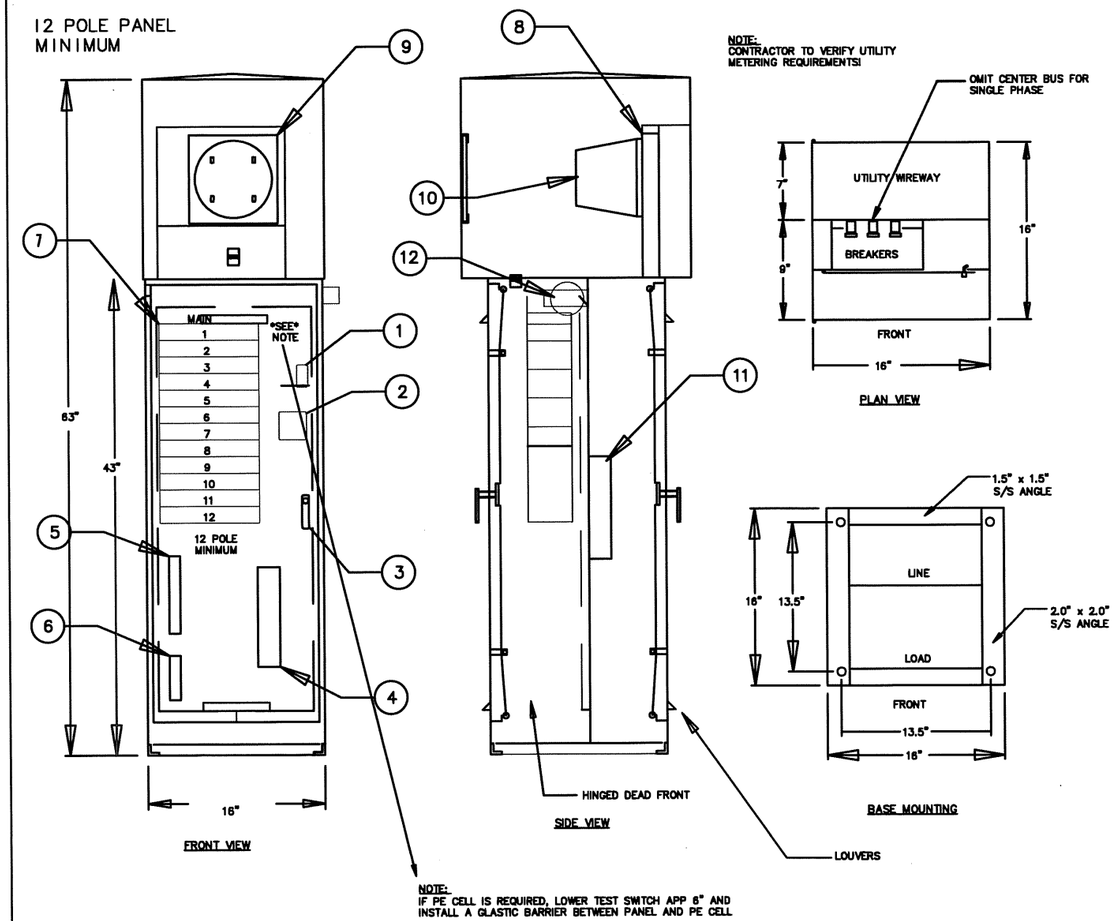

4. UL 67 LABELED PANELBOARD
3. UL 50 LISTED AS SERVICE ENTRANCE EQUIPMENT LABLED CUTOUT BOX NEMA 3R
2. DEADFRONT CONSTRUCTED OF 14 GA TYPE 304 #4 SS BACKPAN 12GA TYPE 304 SS
1. CABINET CONSTRUCTED OF 14-GA TYPE-304 SS (GALVANIZED, PAINTED, MILD STEEL OPTIONAL)

NOTE:
MARATHON 1206 TERMINAL BLOCKS PROVIDED. WIRE RANGE IS #18 – #4 CU. CUSTOMER MUST NOTIFY IF OTHER SIZES ARE REQUIRED.

REVISIONS			
REV	DESCRIPTION	DATE	APPROVED
00	first drawing	07/02/2003	P.D.W.

POLE#	DESCRIPTION
1	1-100-2 "MAIN"
2	" " "
3	1-30-2 "ILLUMINATION"
4	" " "
5	1-60-1 "SIGNAL"
6	1-15-1 "CONTROL"
7	1 – POLE SPACE
8	1 – POLE SPACE
9	1 – POLE SPACE
10	1 – POLE SPACE
11	1 – POLE SPACE
12	1 – POLE SPACE

Item	Qty	U\M	Description
12	1	EA	PE CELL BEHIND POLYCARBONITE WINDOW WITH LIGHT DEFLECTING COVER
11	1	EA	POWER COMPANY TERMINAL BLOCK
10	1	EA	METER: SUPPLIED BY OTHER
9	1	EA	WINDOW: POLY CARBONATE ONE SIDE SCRATCH RESISTANT
8	1	EA	METERBASE: CIRCLE AW, 20324L, 1-P, 4-JAW, 600-VOLT, 200-AMP.
7	4	EA	BREAKERS: G.E. TYPE T.E.D., 18K, AIC @ 240-VOLT.
6	2	EA	COPPER GROUND BAR
5	2	EA	100% RATED COPPER NEUTRAL.
4	1	EA	TERMINAL BLOCK FOR POWER COMPANY HOOK UP
3	1	EA	HANDLE: PAD LOCKABLE SS 73-NS
2	1	EA	CONTACTOR: G.E. CR360L, 600V, 30A, 12DV COIL
1	1	EA	TEST SWITCH: HUBBEL 1221 20A 1P 120\277V

BILL OF MATERIALS

FOUCH ELECTRIC MFG. CO. INC.

2138 N INTERSTATE AVE.
PORTLAND, OREGON. 97227

EMAIL: sales@fouch.com
WEB: www.Fouch.com

JOB NAME: CLACKAMAS COUNTY

CONTRACTOR: CLACKAMAS COUNTY

JOB #: TBA

DWG#: 0600-0074-00 REV: 01 QTY: 1

Traffic Section Approval

REGISTERED PROFESSIONAL ENGINEER 18,503 OREGON JULY 10, 1996 BRIAN K. COPELAND

EXPIRES: DEC. 31, 2015

OREGON DEPARTMENT OF TRANSPORTATION

DKS 720 SW Washington Street, Suite 500 Portland, Oregon 97205 (503) 243-3500 www.dksassociates.com

17TH AVE TRAIL: SE OCHOCO - SE MCLOUGHLIN

CITY OF MILWAUKIE

CLACKAMAS COUNTY

DESIGNED BY: K. Svicarovich
REVIEWED BY: B. Copeland
DRAWN BY: M. Zarkos
FC: Varies MP: Varies

SIGNAL DETAILS

CITY OF MILWAUKIE DWG. NO. 00017

TSSU NO. _____ T.R.S. DWG. NO. _____

X:\Projects\2014\P14081-000 (Milwaukie 17th Av Trail)\ACAD\ 00017.dwg

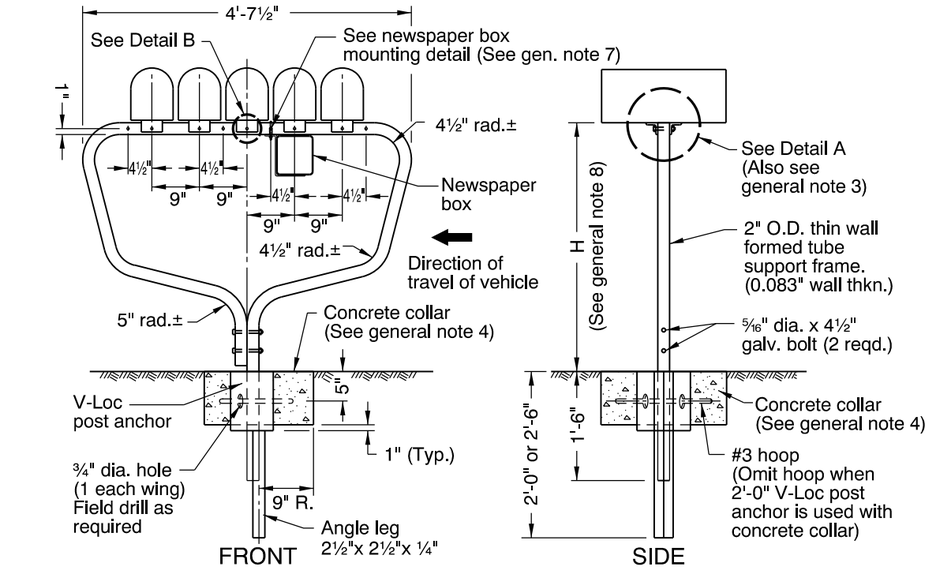

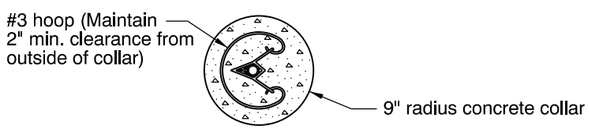

CONCRETE COLLAR
(See general note 4)

MULTIPLE SUPPORT

(Supports 5 standard (Sizes 1 & 1½) mailboxes or 4 large (Size 2) mailboxes)

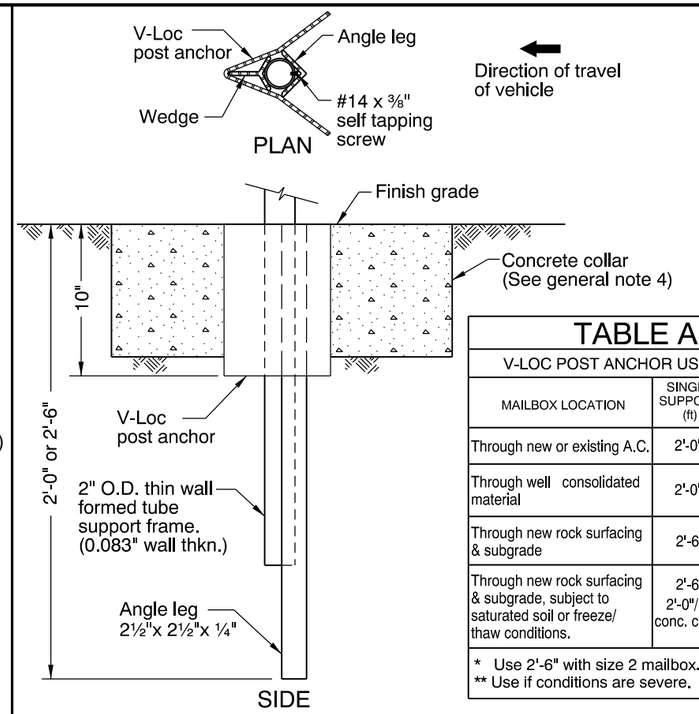

TABLE A		
V-LOC POST ANCHOR USE CHART		
MAILBOX LOCATION	SINGLE SUPPORT (ft)	MULTIPLE SUPPORT (ft)
Through new or existing A.C.	2'-0"	2'-0"
Through well consolidated material	2'-0" *	2'-6"
Through new rock surfacing & subgrade	2'-6"	2'-0" conc. collar
Through new rock surfacing & subgrade, subject to saturated soil or freeze/ thaw conditions.	2'-6" 2'-0"/ ** conc. collar	2'-6"/ conc. collar
* Use 2'-6" with size 2 mailbox. ** Use if conditions are severe.		

POST MOUNTING SOCKET

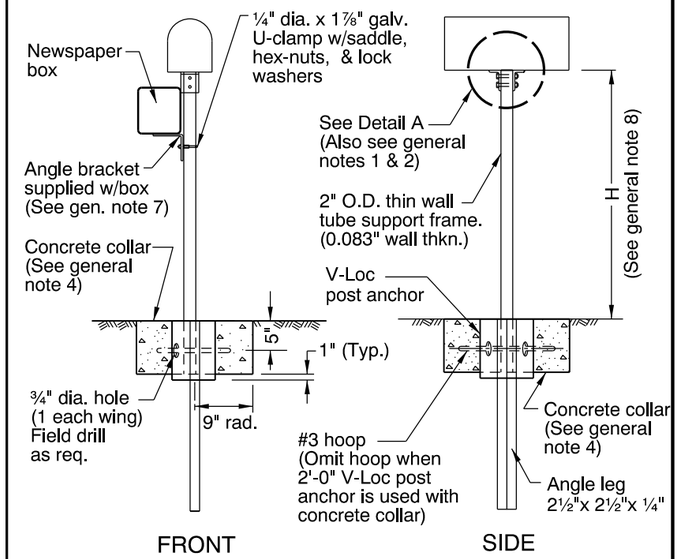

SINGLE SUPPORT

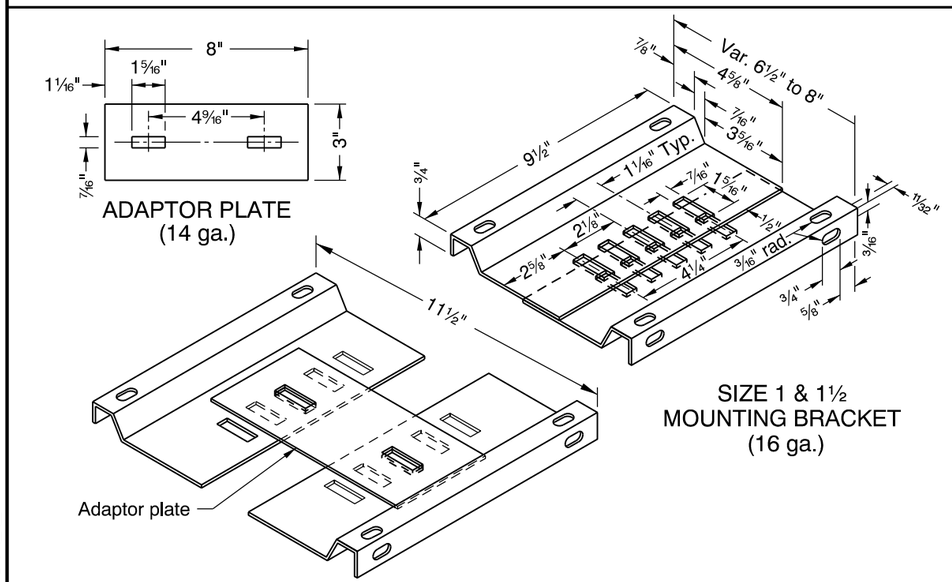

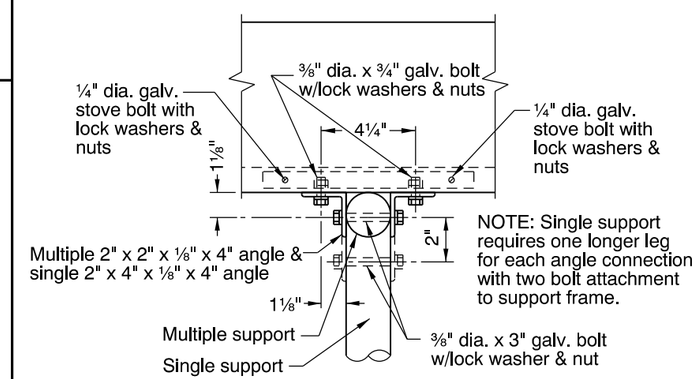

DETAIL A

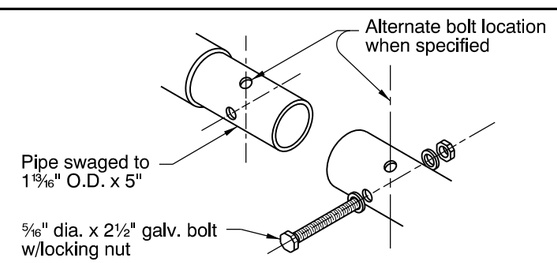

DETAIL B

GENERAL NOTES FOR ALL DETAILS:

1. Angle connections to be parallel to traffic flow for Size 2 mailbox mounted on single post.
2. All holes in the tube support frame are to be predrilled by the manufacturer.
3. Size 2 mailbox mounted on a multiple support requires 2 each ⅜" dia. x ⅝" galv. bolts with lock washers and nuts to attach the adaptor plate to the mounting bracket. The unit will then require 4 angle connections to attach to the formed tube support frame. See Detail A.
4. Provide concrete collar when any of the following conditions exist:
   a) when required in Table A
   b) when required by project plans
   c) as directed by the Engineer
   Concrete collar, when required, to be poured in place after V-Loc post anchor has been installed, level and plumb. Do not excavate below bottom of V-Loc post anchor. Care shall be taken that no concrete is placed within anchor.
5. Other proprietary products available as listed in ODOT's QPL.
6. For mailbox installation locations, see Std. Drg. RD101 and project plans.
7. For Newspaper Box Mounting Detail, see Std. Drg. RD101.
8. Mounting height (H) shall be 42" nominal, measured from vehicle driving surface.

CALC. BOOK NO. N/A

BASELINE REPORT DATE 12-JAN-2015

NOTE: All material and workmanship shall be in accordance with the current Oregon Standard Specifications

The selection and use of this Standard Drawing, while designed in accordance with generally accepted engineering principles and practices, is the sole responsibility of the user and should not be used without consulting a Registered Professional Engineer.

OREGON STANDARD DRAWINGS

MAILBOX SUPPORT

2015

DATE	REVISION DESCRIPTION
01-2015	REVISED DETAILS & NOTES

rd100.dgn 12-JAN-2015

RD100

Effective Date: December 1, 2015 - May 31, 2016

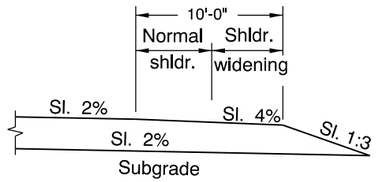

SECTION A-A

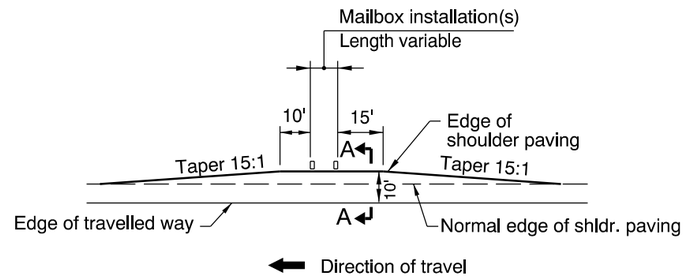

MAILBOX SERVICE TURNOUT

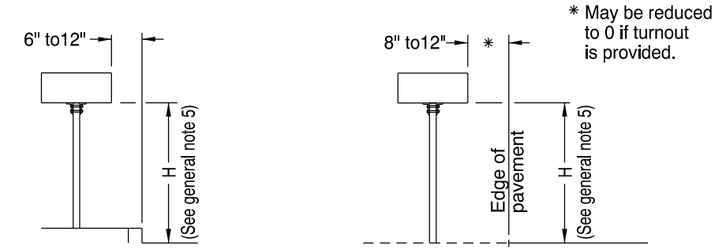

CURBED SECTION

NON-CURBED SECTION

PLACEMENT

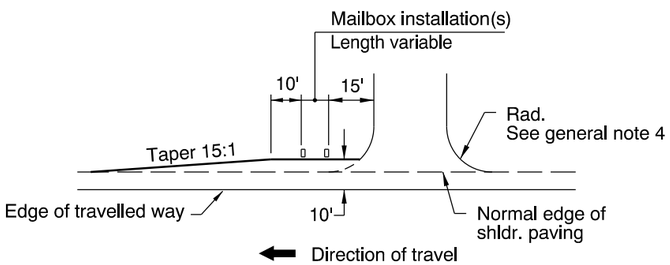

MAILBOX SERVICE TURNOUT AFTER APPROACH

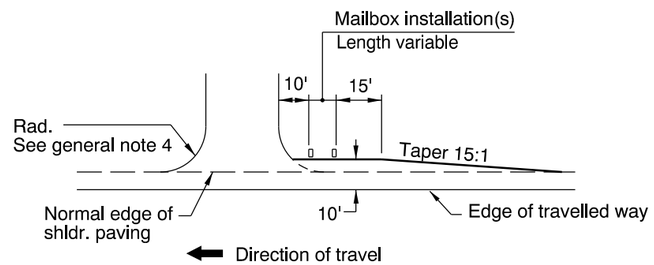

MAILBOX SERVICE TURNOUT BEFORE APPROACH

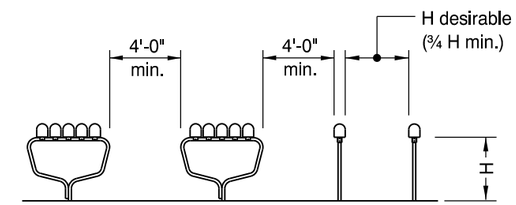

SUPPORT SPACING

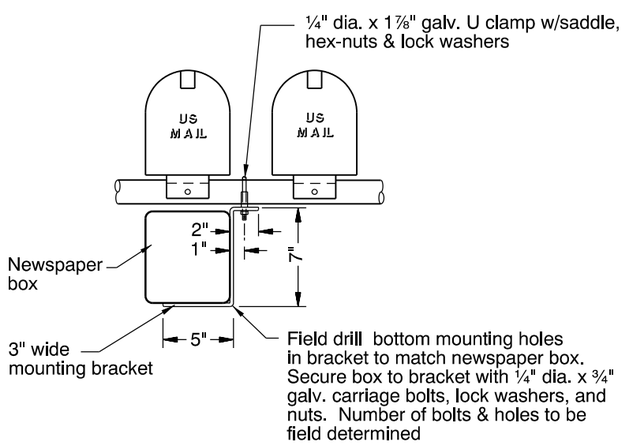

NEWSPAPER BOX MOUNTING DETAIL

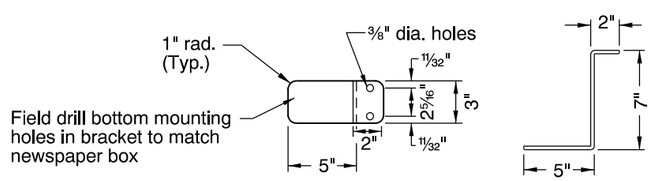

TOP VIEW

SIDE VIEW

NEWSPAPER BOX MOUNTING BRACKET DETAIL (14 ga.)

GENERAL NOTES FOR ALL DETAILS:

1. All holes in the tube support frame are to be predrilled by the manufacturer.
2. Other proprietary products available as listed in ODOT's QPL.
3. For mailbox support details, see Std. Drg. RD100.
4. For approach details, see Std. Drg. RD715.
5. Mounting height (H) shall be 42" nominal, measured from vehicle driving surface.

CALC. BOOK NO. N/A

BASELINE REPORT DATE 27-JUN-2011

NOTE: All material and workmanship shall be in accordance with the current Oregon Standard Specifications

The selection and use of this Standard Drawing, while designed in accordance with generally accepted engineering principles and practices, is the sole responsibility of the user and should not be used without consulting a Registered Professional Engineer.

OREGON STANDARD DRAWINGS

MAILBOX INSTALLATION

2015

DATE	REVISION DESCRIPTION

rd101.dgn 14-JUL-2014

RD101

rd300.dgn 14-JUL-2014

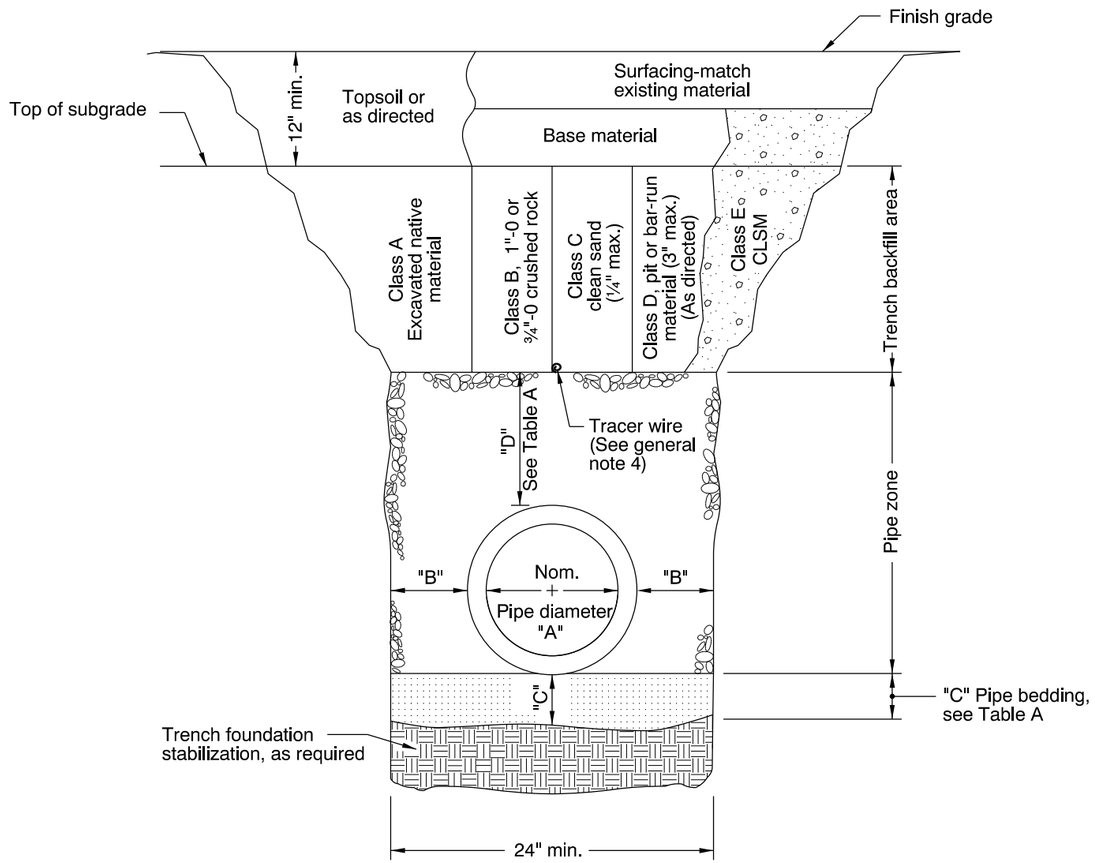

MULTIPLE INSTALLATIONS

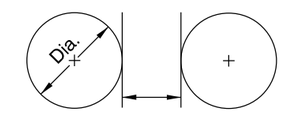

DIAMETER	MIN. SPACE BETWEEN PIPES
Up to 48"	24"
48" to 72"	One half (½) dia. of pipe

TABLE A

"A" (in)	"B" (in)	"C" (in)	"D" (in)
4	10	4	8
6	10	4	8
8	10	6	10
10	10	6	10
12	12	6	10
15	12	6	10
18	16	6	12
21	16	6	12
24	18	6	12
30	18	6	12
36	24	6	14
42	24	6	14
48	24	6	14
54	24	6	14
60	24	6	14
66	24	6	14
72	24	6	14

For pipes over 72" diameter, see general note 3.

GENERAL NOTES FOR ALL DETAILS:

1. Surfacing of paved areas shall comply with street cut Std. Drg. RD302.
2. For pipe installation in embankment areas where the trench method will not be used and the pipe is ≥ 36" diameter, increase dimension "B" to nominal pipe diameter.
3. Pipes over 72" diameter are structures, and are not applicable to this drawing.
4. See Std. Drg. RD336 for tracer wire details (When required).

CALC. BOOK NO. N/A

BASELINE REPORT DATE 14-JUL-2014

NOTE: All material and workmanship shall be in accordance with the current Oregon Standard Specifications

The selection and use of this Standard Drawing, while designed in accordance with generally accepted engineering principles and practices, is the sole responsibility of the user and should not be used without consulting a Registered Professional Engineer.

OREGON STANDARD DRAWINGS

TRENCH BACKFILL, BEDDING, PIPE ZONE AND MULTIPLE INSTALLATIONS

2015

DATE	REVISION DESCRIPTION

RD300

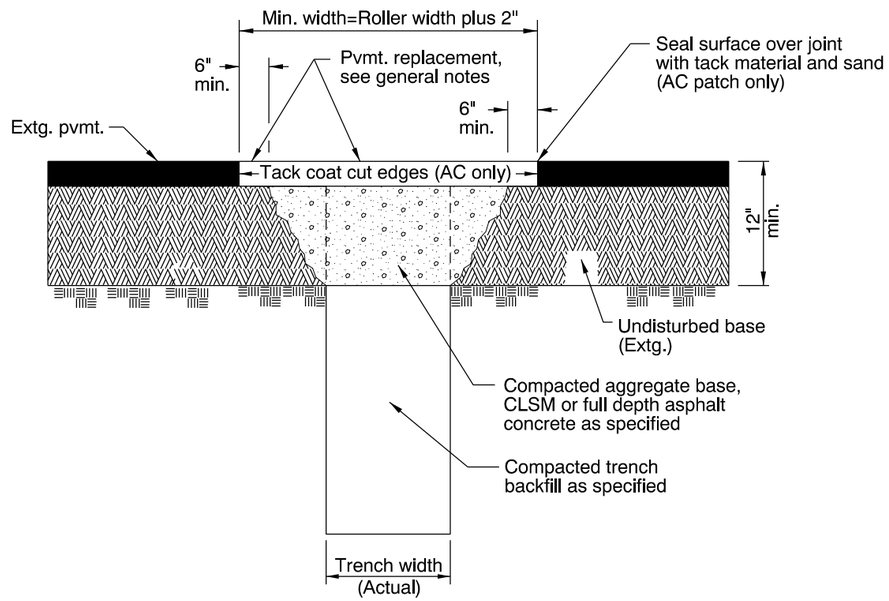

GENERAL NOTES FOR ALL DETAILS:

1. All existing AC or PCC pavement shall be sawcut prior to repaving.
2. Concrete pavement shall be replaced with concrete to a minimum thickness of 6" or to the thickness of removed pavement, whichever is greater.
3. Place AC mix minimum thkn. of 4" or the thkn. of the removed pavement, whichever is greater. Compact as specified.

CALC. BOOK NO. N/A

BASELINE REPORT DATE 12-JUN-2008

NOTE: All material and workmanship shall be in accordance with the current Oregon Standard Specifications

The selection and use of this Standard Drawing, while designed in accordance with generally accepted engineering principles and practices, is the sole responsibility of the user and should not be used without consulting a Registered Professional Engineer.

OREGON STANDARD DRAWINGS

STREET CUT

2015

DATE	REVISION DESCRIPTION

rd302.dgn 14-JUL-2014

RD302

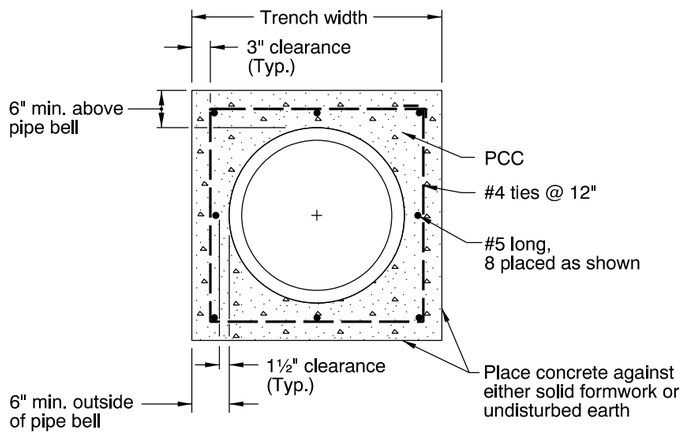

CONCRETE ENCASEMENT DETAIL

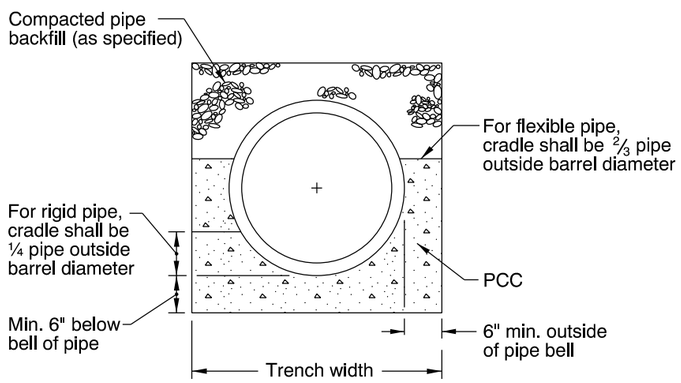

CRADLE DETAIL

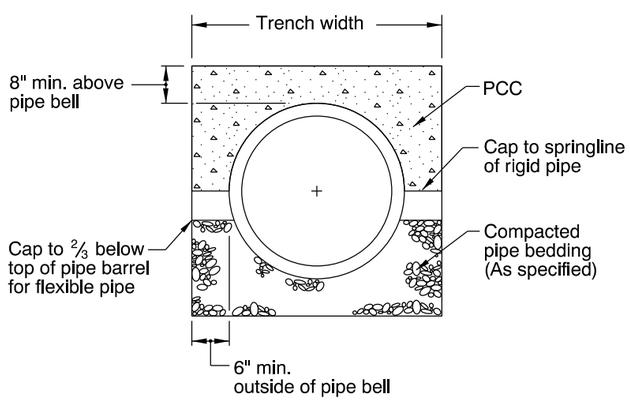

CAP DETAIL

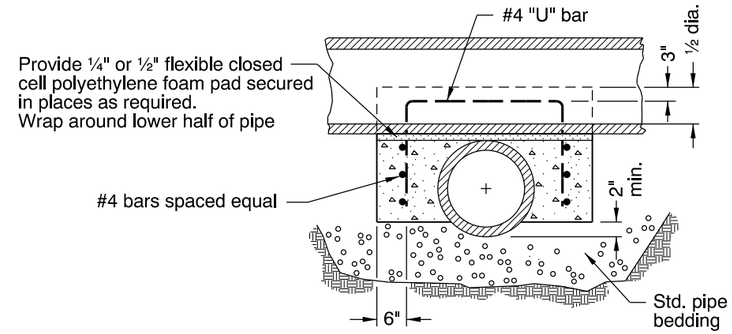

SECTION C-C

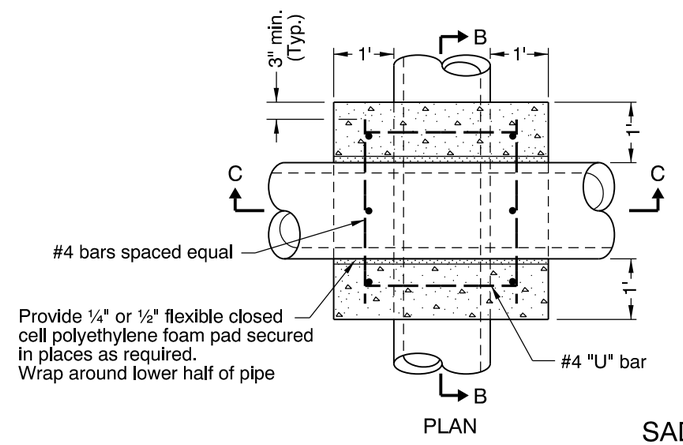

PLAN

SADDLE

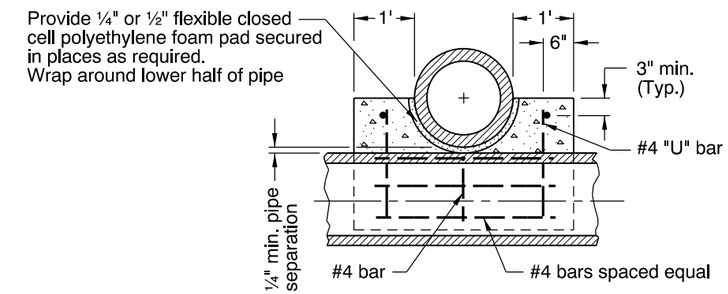

SECTION B-B

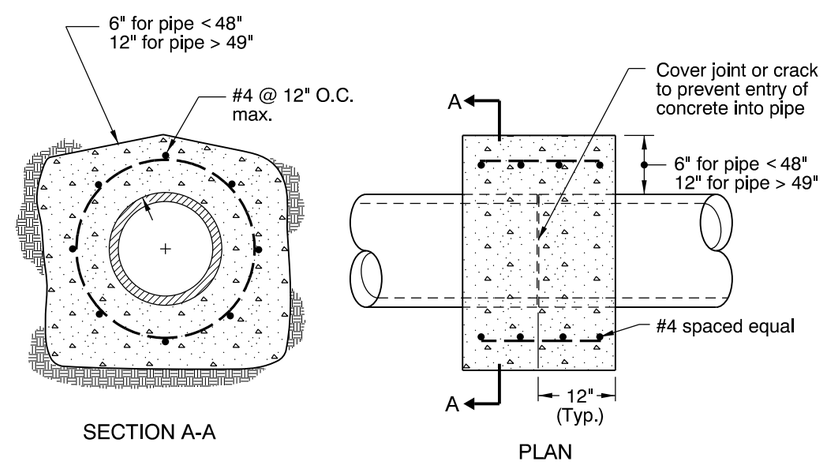

SECTION A-A

PLAN

REINFORCED CONCRETE COLLAR

GENERAL NOTES FOR ALL DETAILS:

1. All concrete shall be commercial grade concrete.
2. End all reinforcing 3" clear of ground, forms or top surface, unless otherwise shown.
3. Trowel finish top surface of saddle, and cradle.
4. Reinforcement shall be # 4 vertical & horizontal bars as shown.
5. See Std. Drg. RD300 for trench backfill, bedding, etc.
6. See Std. Drg. RD336 for tracer wire details (When required).
7. Pipe over 72" diameter are structures, and are not applicable to this drawing.

CALC. BOOK NO. N/A

BASELINE REPORT DATE 14-JUL-2014

NOTE: All material and workmanship shall be in accordance with the current Oregon Standard Specifications

The selection and use of this Standard Drawing, while designed in accordance with generally accepted engineering principles and practices, is the sole responsibility of the user and should not be used without consulting a Registered Professional Engineer.

OREGON STANDARD DRAWINGS

CONCRETE ENCASEMENT, CRADLE, AND CAP DETAILS

2015

DATE	REVISION DESCRIPTION

rd306.dgn 14-JUL-2014

RD306

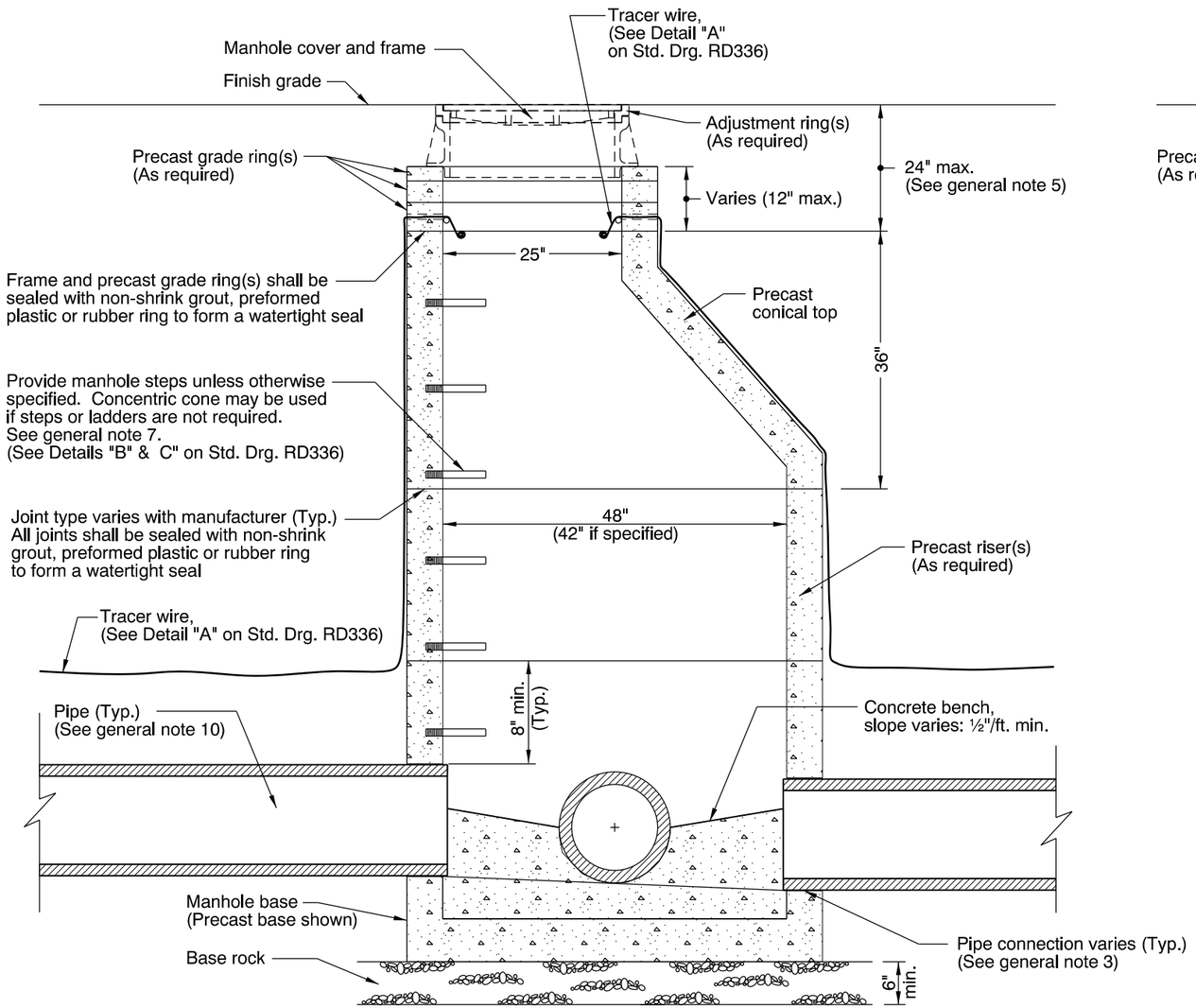

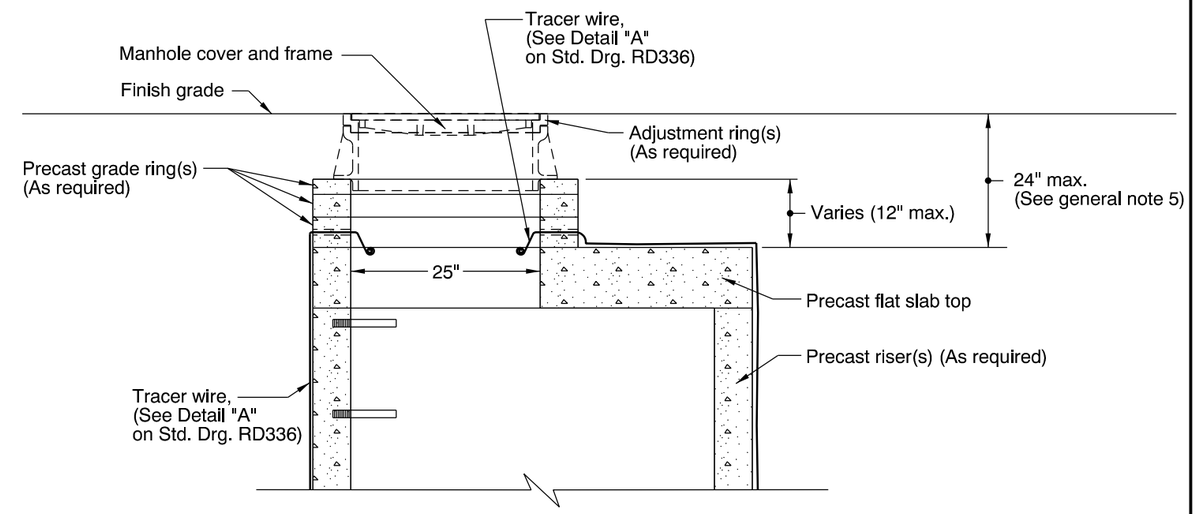

GENERAL NOTES FOR ALL DETAILS:

1. All precast products shall conform to requirements of ASTM C478.
2. Standard precast manhole section diameter shall be 48". Use 42" if specified by the Engineer.
3. See Std. Drg. RD345 for pipe to manhole connections.
4. See Std. Drg. RD344 for manhole base section.
5. Adjust 24" maximum.
6. All connecting pipes shall have a tracer wire, or approved alternate.
7. See Std. Drg. RD337 for manhole safety ladder.
8. See Std. Drg. RD336 for details not shown.
9. See Std. Drg. RD356 for manhole covers and frames, manhole adjustment rings, etc.
10. Max. pipe diameter varies with pipe material.
11. See Std. Drg. RD342 for shallow manholes.
12. Location, elevation, diameter, slope, and number of pipe(s) varies, see project plans.

CALC. BOOK NO. N/A

BASELINE REPORT DATE 14-JUL-2014

NOTE: All material and workmanship shall be in accordance with the current Oregon Standard Specifications

The selection and use of this Standard Drawing, while designed in accordance with generally accepted engineering principles and practices, is the sole responsibility of the user and should not be used without consulting a Registered Professional Engineer.

OREGON STANDARD DRAWINGS

STANDARD STORM SEWER MANHOLE

2015

DATE	REVISION DESCRIPTION

rd335.dgn 14-JUL-2014

RD335

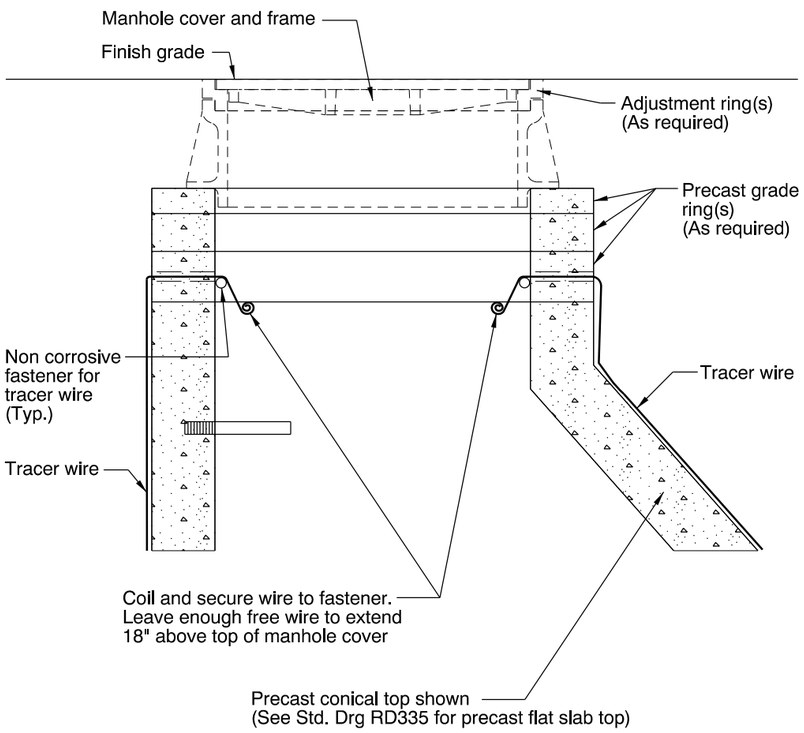

DETAIL "A"
TRACER WIRE
(See general note 6)

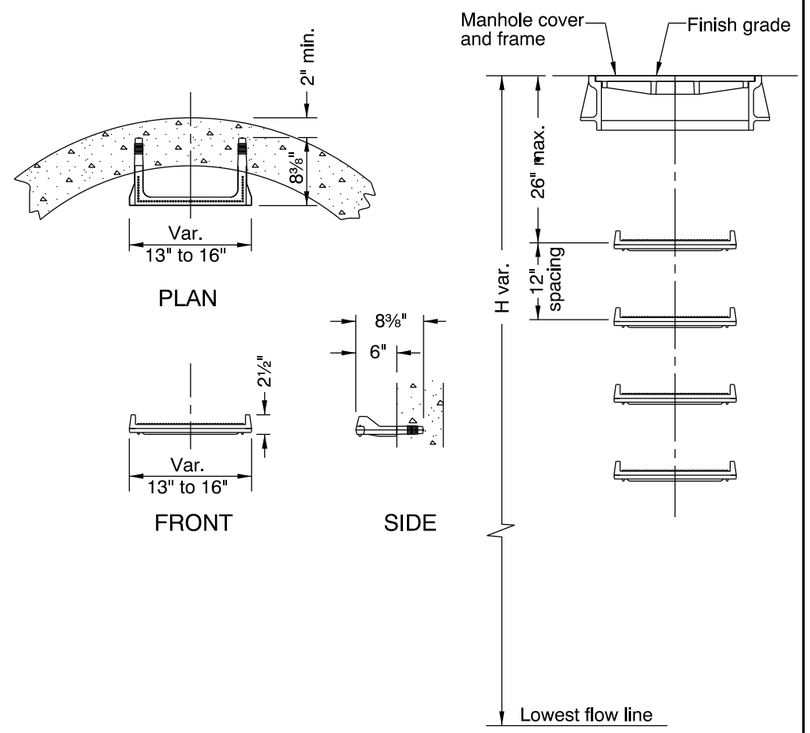

See ODOT's QPL for acceptable alternate manhole steps and/or ladders.
NOTE: No conflict with pipe align with available shelf.

DETAIL "B"
MANHOLE STEPS
(See general note 7)

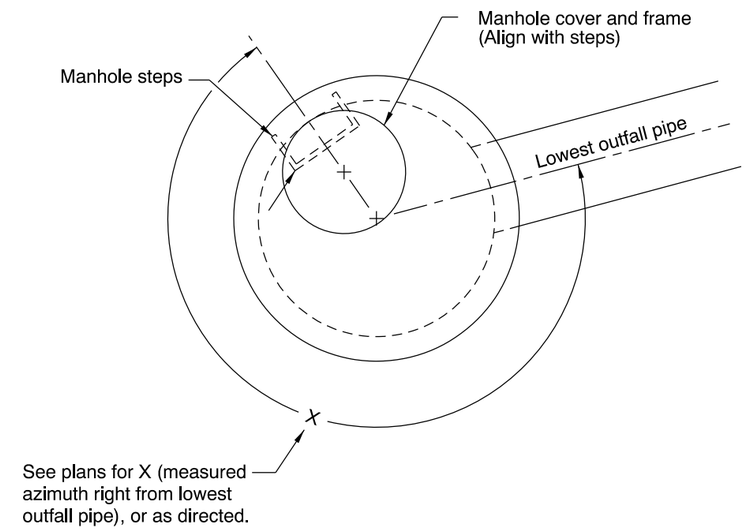

PLAN

DETAIL "C"
PRECAST CONICAL TOP
OR
PRECAST FLAT SLAB TOP
AND MANHOLE STEPS ORIENTATION
(See general note 7)

GENERAL NOTES FOR ALL DETAILS:

1. All precast products shall conform to requirements of ASTM C478.
2. Standard precast manhole section diameter shall be 48". Use 42" if specified by the Engineer.
3. See Std. Drg. RD345 for pipe to manhole connections.
4. See Std. Drg. RD344 for manhole base section.
5. Adjust 24" maximum.
6. All connecting pipes shall have a tracer wire, or approved alternate. Place tracer wire directly over pipe centerline and on top of the pipe zone material.
7. Steps and ladders shall conform to requirements of ASTM C478. See Std. Drg. RD337 for manhole safety ladder. When H=42" or less omit steps. See Detail "C" for alignment of steps, and manhole cover and frame.
8. See Std. Drg. RD335 for details not shown.
9. See Std. Drg. RD356 for manhole covers and frames, manhole adjustment rings, etc.
10. Max. pipe diameter varies with pipe material.
11. See Std. Drg. RD342 for shallow manholes.
12. See project plans for details not shown.

CALC. BOOK NO. N/A

BASELINE REPORT DATE 21-JUL-2015

NOTE: All material and workmanship shall be in accordance with the current Oregon Standard Specifications

The selection and use of this Standard Drawing, while designed in accordance with generally accepted engineering principles and practices, is the sole responsibility of the user and should not be used without consulting a Registered Professional Engineer.

OREGON STANDARD DRAWINGS

STANDARD MANHOLE DETAILS

2015

DATE	REVISION DESCRIPTION
07-2015	REVISED DETAILS & NOTES

21-JUL-2015 rd336.dgn

RD336

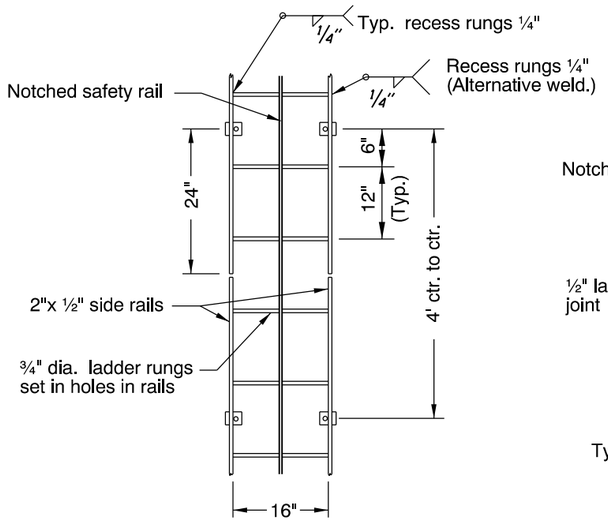

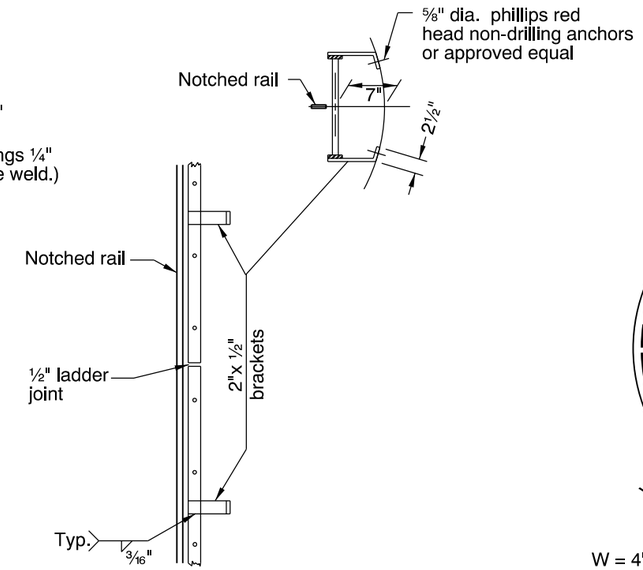

NOTE:
All structural steel shall be A36.
All bolts shall be A307.
All material shall be hot - Dipped galvanized after fabrication.

SAFETY LADDER

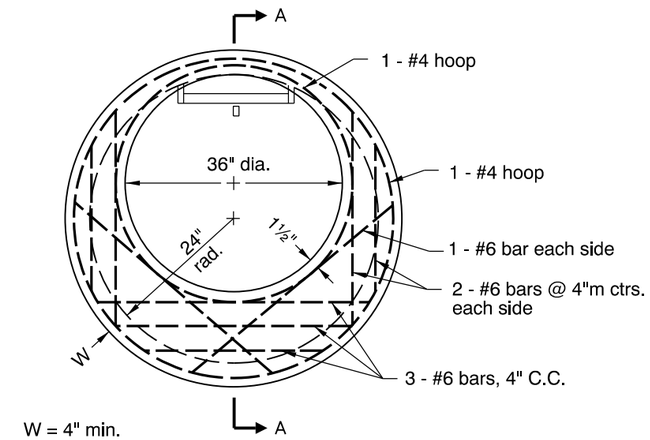

TOP VIEW

NOTE:
Ladder may be jointed as shown to permit galvanizing. Minimum spacing between joints shall be 16'.

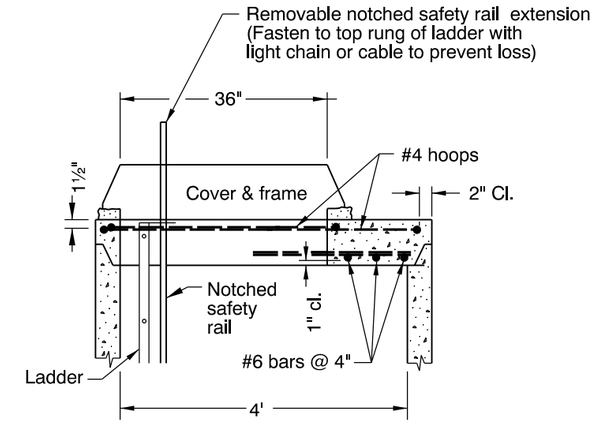

SECTION A - A

GENERAL NOTES FOR ALL DETAILS:

1. Ladder shall conform to requirements of ASTM C478.
2. See appropriate manhole standard drawing(s) for details not shown.
3. Fall arrest system is not required on ladders under 20 feet in height.

CALC. BOOK NO. N/A

BASELINE REPORT DATE 14-JUL-2014

NOTE: All material and workmanship shall be in accordance with the current Oregon Standard Specifications

The selection and use of this Standard Drawing, while designed in accordance with generally accepted engineering principles and practices, is the sole responsibility of the user and should not be used without consulting a Registered Professional Engineer.

OREGON STANDARD DRAWINGS

MANHOLE SAFETY LADDER

2015

DATE	REVISION DESCRIPTION

rd337.dgn 14-JUL-2014

RD337

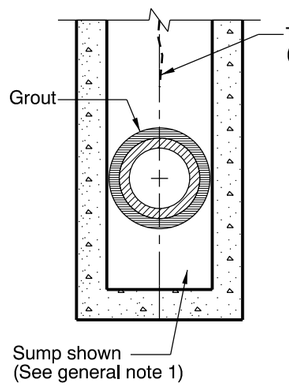

SECTION B-B

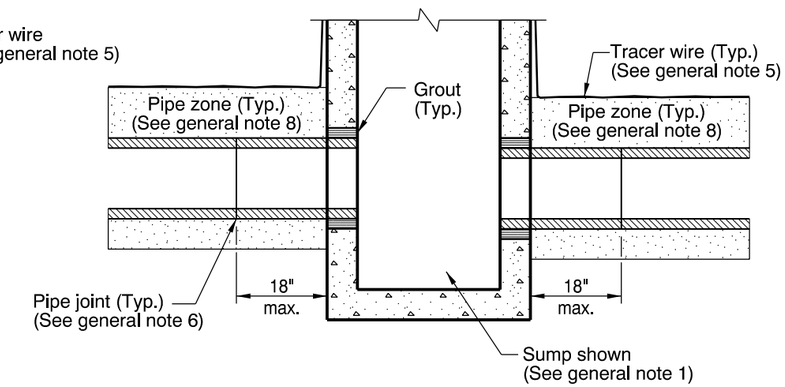

SECTION A-A

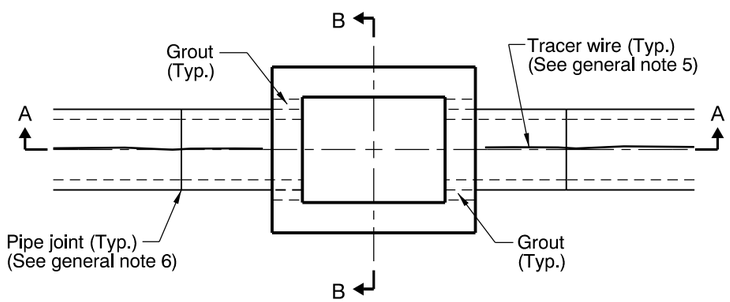

PLAN

CONNECTION OF RIGID PIPE TO STRUCTURE

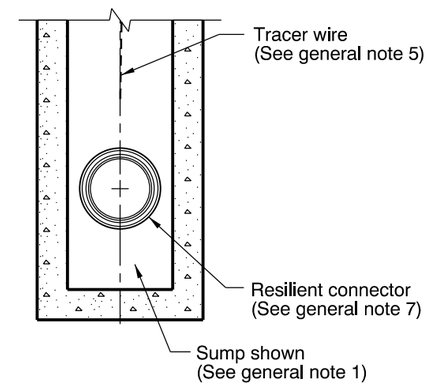

SECTION B-B

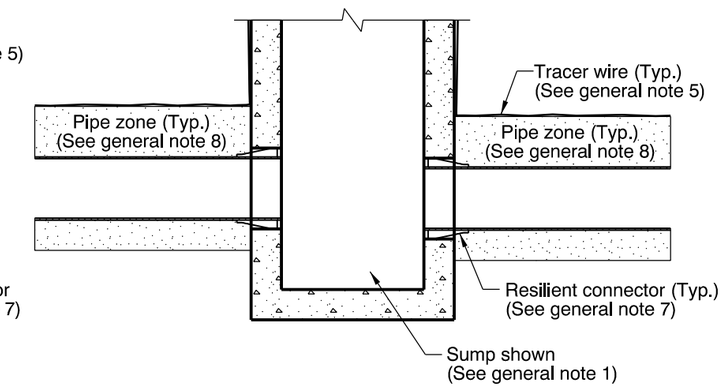

SECTION A-A

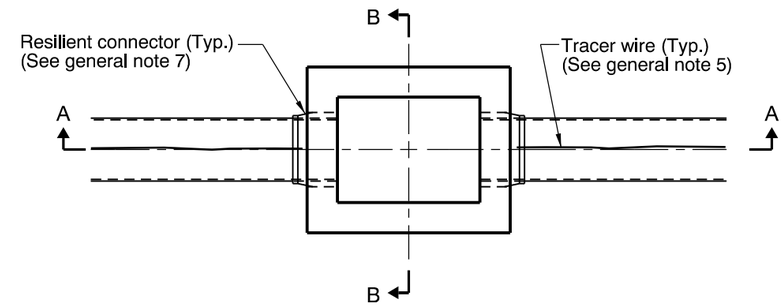

PLAN

CONNECTION OF FLEXIBLE PIPE TO STRUCTURE

GENERAL NOTES FOR ALL DETAILS:

1. See Std. Drgs. RD364, RD365, and RD366 for inlet details not shown.
2. See appropriate standard drawings or special project details for other similar structures.
3. Location, elevation, diameter, slope, and number of pipe(s) varies, see project plans.
4. Max. pipe diameter varies with pipe material.
5. All connecting pipes shall have a tracer wire, or approved alternate. See Std. Drg. RD336 for tracer wire details.
6. When rigid pipe is used, the connecting pipe shall have a flexible, gasketted and unrestrained joint within 18" of manhole wall. Joint type varies with manufacturer.
7. When flexible pipe is used, install resilient connectors conforming to requirements of ASTM C923.
8. Pipe zone varies, see Std. Drg. RD300.

CALC. BOOK NO. N/A

BASELINE REPORT DATE 14-JUL-2014

NOTE: All material and workmanship shall be in accordance with the current Oregon Standard Specifications

The selection and use of this Standard Drawing, while designed in accordance with generally accepted engineering principles and practices, is the sole responsibility of the user and should not be used without consulting a Registered Professional Engineer.

OREGON STANDARD DRAWINGS

PIPE TO STRUCTURE CONNECTIONS

2015

DATE	REVISION DESCRIPTION

rd339.dgn 14-JUL-2014

RD339

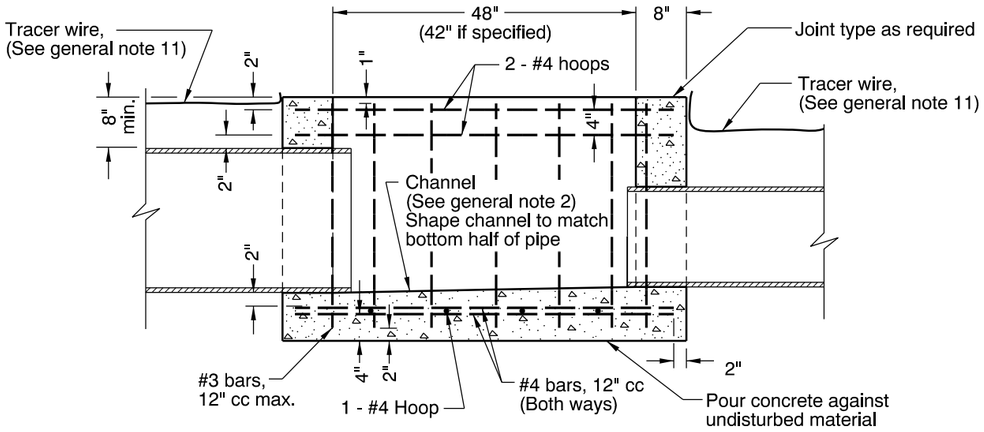

SECTION A-A

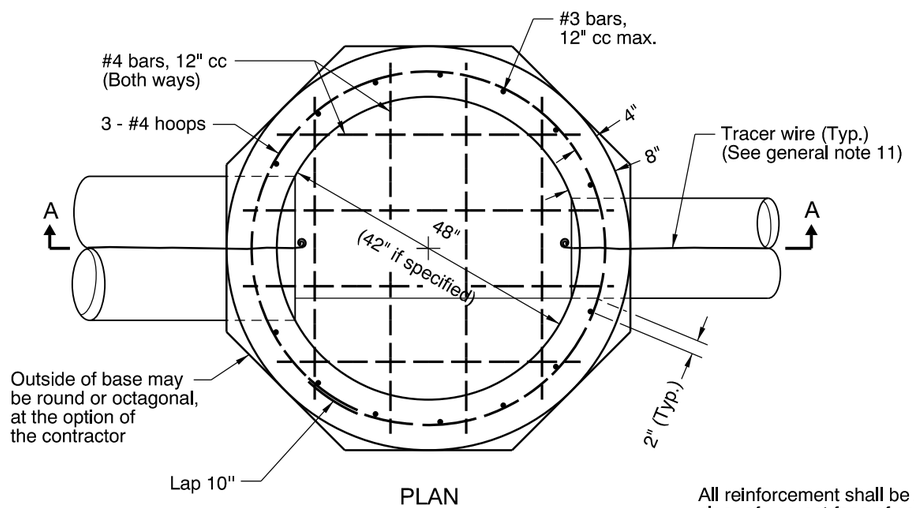

PLAN

All reinforcement shall be 2" clear of nearest face of conc., unless otherwise shown.

CAST IN PLACE MANHOLE BASE

(For invert channel details, see precast option at right)

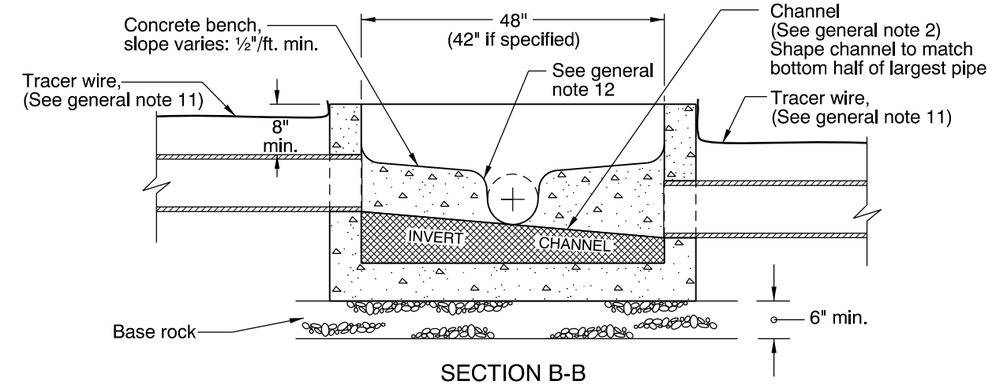

SECTION B-B

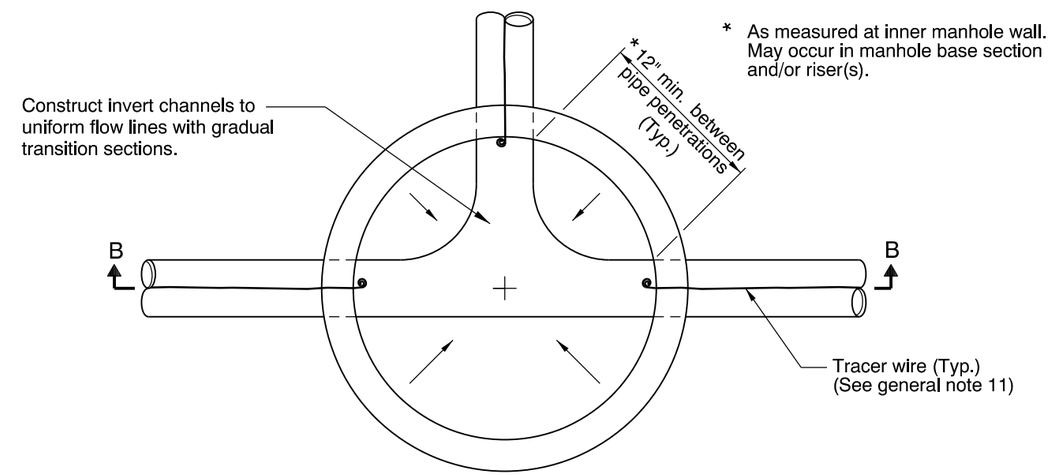

* As measured at inner manhole wall. May occur in manhole base section and/or riser(s).

PLAN

PRECAST MANHOLE BASE

GENERAL NOTES FOR ALL DETAILS:

1. All concrete shall be commercial grade concrete.
2. Channels shall be constructed to provide smooth slopes and radii to outlet pipe.
3. Bases may be precast or cast in place.
4. Max. pipe diameter varies with pipe material.
5. Use on 42" and 48" diameter manhole.
6. Extend pipe into manhole and grout smooth. Pipe(s) may extend 2" max. beyond the interior manhole wall.
7. Location, elevation, diameter, slope, and number of pipe(s) varies, see project plans.
8. All precast products shall conform to the requirements of ASTM C478.
9. See Std. Drg. RD345 for pipe to manhole connections.
10. See Std. Drg. RD336 for manhole steps details.
11. See Std. Drg. RD336 for tracer wire details.
12. At spring line of pipe, extend channel up to crown line on 12:1 batter.

CALC. BOOK NO. N/A

BASELINE REPORT DATE 14-JUL-2014

NOTE: All material and workmanship shall be in accordance with the current Oregon Standard Specifications

The selection and use of this Standard Drawing, while designed in accordance with generally accepted engineering principles and practices, is the sole responsibility of the user and should not be used without consulting a Registered Professional Engineer.

OREGON STANDARD DRAWINGS

STANDARD MANHOLE BASE SECTION

2015

DATE	REVISION DESCRIPTION

rd344.dgn 14-JUL-2014

RD344

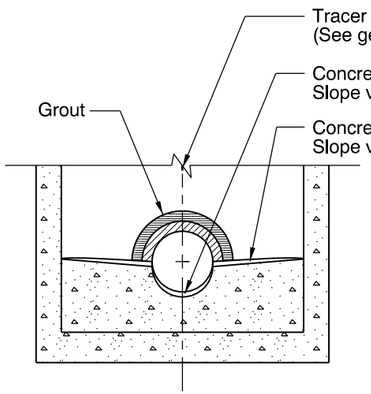

SECTION B-B

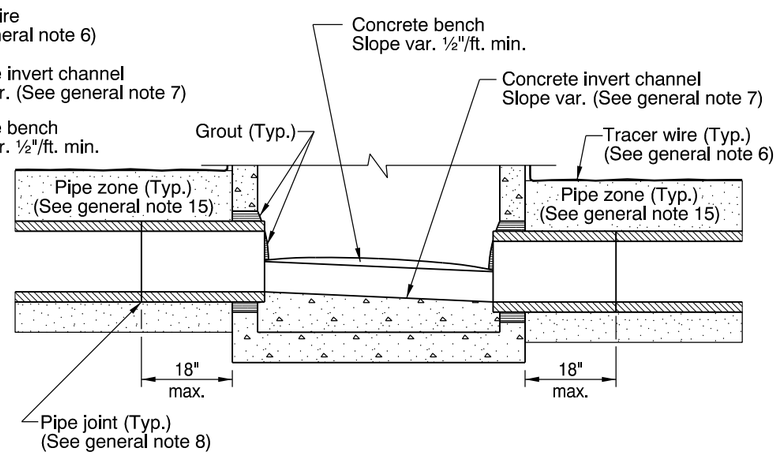

SECTION A-A

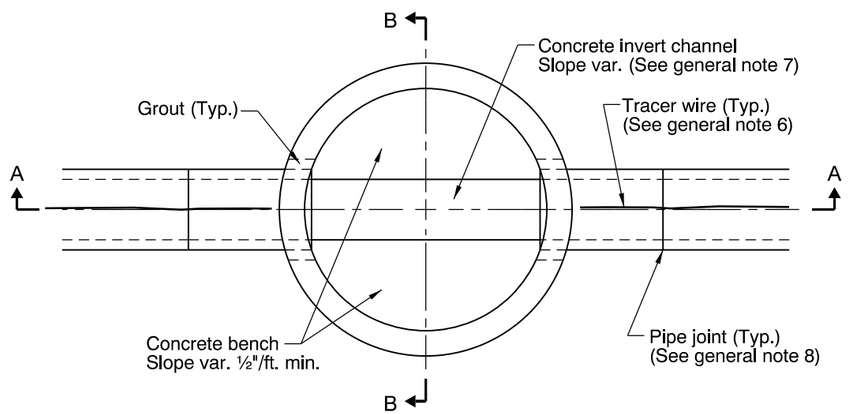

PLAN

CONNECTION OF RIGID PIPE TO MANHOLE

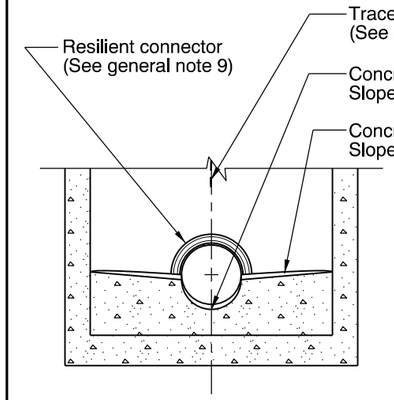

SECTION B-B

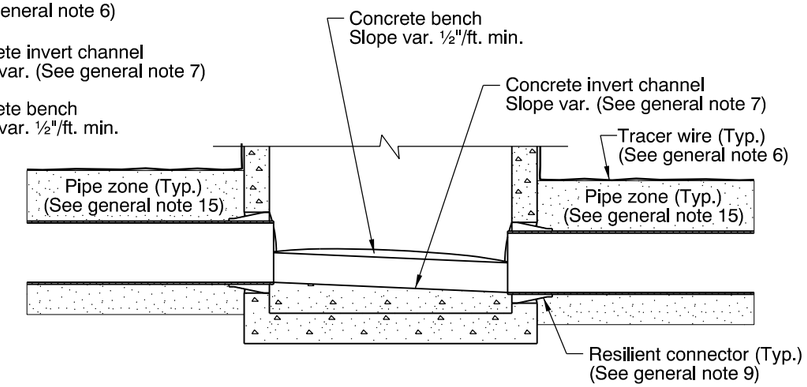

SECTION A-A

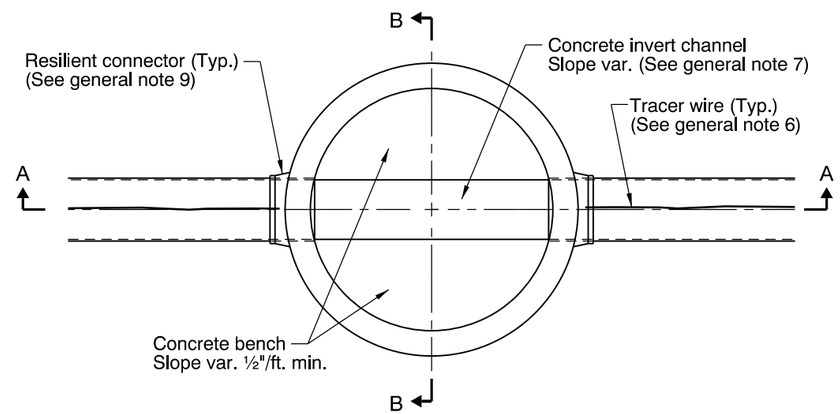

PLAN

CONNECTION OF FLEXIBLE PIPE TO MANHOLE

GENERAL NOTES FOR ALL DETAILS:

1. All precast sections shall conform to requirements of ASTM C478.
2. Manhole base sections may be precast or cast-in-place.
3. All concrete shall be commercial grade concrete.
4. Location, elevation, diameter, slope, and number of pipe(s) varies, see project plans.
5. Max. pipe diameter varies with pipe material.
6. All connecting pipes shall have a tracer wire, or approved alternate. See Std. Drg. RD336 for tracer wire details.
7. Invert channels shall be constructed to provide smooth slopes and radii to outlet pipe.
8. When rigid pipe is used, the connecting pipe shall have a flexible, gasketted and unrestrained joint within 18" of manhole wall. Joint type varies with manufacturer.
9. When flexible pipe is used, install resilient connectors conforming to requirements of ASTM C923.
10. See Std. Drgs. RD335, RD336, and RD338 for details not shown.
11. See Std. Drg. RD336 for manhole steps details.
12. See Std. Drg. RD342 for shallow manholes.
13. See Std. Drg. RD344 for manhole base section.
14. See Std. Drg. RD356 for manhole covers and frames, manhole adjustment rings, etc.
15. Pipe zone varies, see Std. Drg. RD300.

CALC. BOOK NO. N/A

BASELINE REPORT DATE 14-JUL-2014

NOTE: All material and workmanship shall be in accordance with the current Oregon Standard Specifications

The selection and use of this Standard Drawing, while designed in accordance with generally accepted engineering principles and practices, is the sole responsibility of the user and should not be used without consulting a Registered Professional Engineer.

OREGON STANDARD DRAWINGS

PIPE TO MANHOLE CONNECTIONS

2015

DATE	REVISION DESCRIPTION

rd345.dgn 14-JUL-2014

RD345

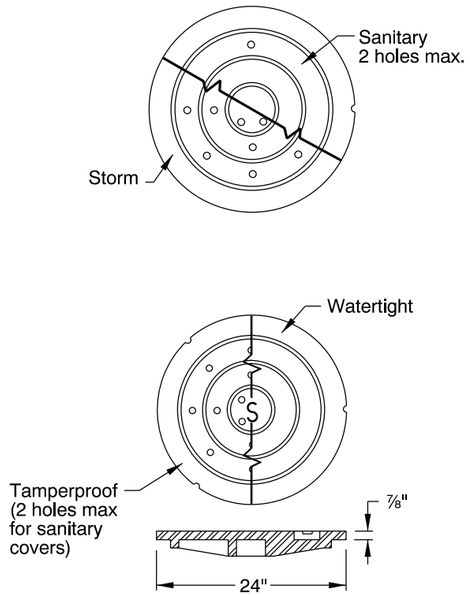

Cast iron tamperproof & watertight
(Frames available in standard or suburban pattern)

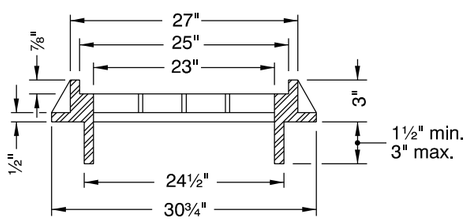

CAST IRON SUBURBAN FRAME

For use on local streets only, as specified

SUBURBAN MANHOLE COVER & FRAME

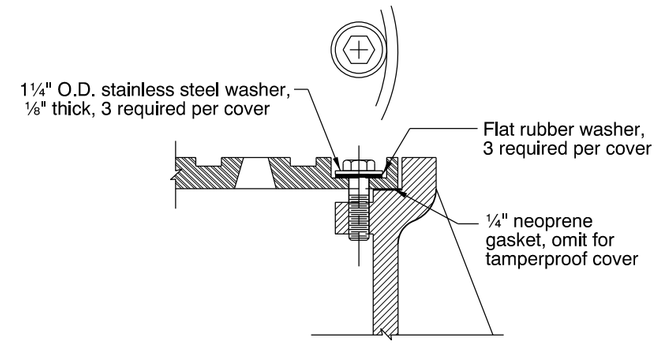

NOTE:
3 reqd., equally spaced, ½" x 1½" pentagonal or hexagonal head, bronze or stainless steel. Install frame so that one bolt boss is located over the manhole ladder. (See general note 8)

BOLT-DOWN DETAIL
(FOR TAMPERPROOF AND WATERTIGHT)

* Std. depths 1½", 2", 2½" & 3"
Matl. to be grey cast iron ASTM A 48, Class 35B. Tolerance on non-machined surfaces to be ±0.06", see general note 6

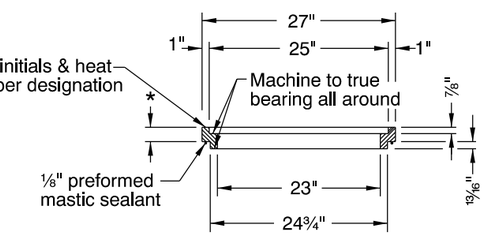

SECTION C-C

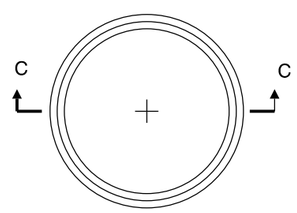

MANHOLE ADJUSTMENT RING
For use with Standard Manhole Frame

STANDARD MANHOLE COVER, FRAME & GRATE

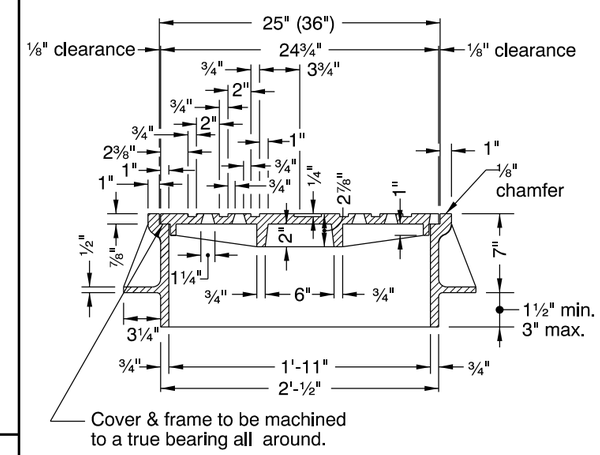

SECTION A-A

36" min. diameter cover is reqd. for manholes with depths of 20' or greater. (See general note 4)

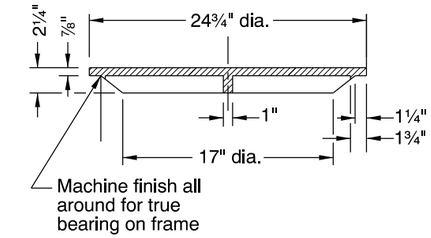

SECTION B-B

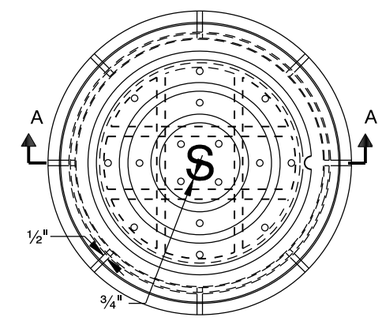

NOTE:
Coat outside of frame with asphalt, where frame is to be placed in conc. pvmt., conc. gutter, or walk.

PLAN
MANHOLE COVER & FRAME

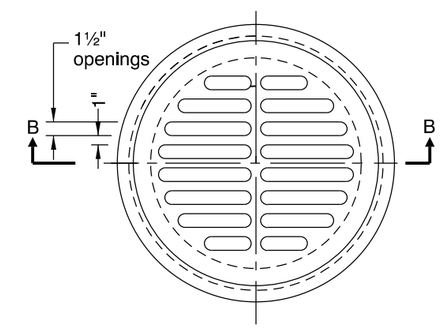

For use with Standard Manhole Frame
(See general note 7)

PLAN
MANHOLE GRATE

GENERAL NOTES FOR ALL DETAILS:

1. Tamperproof covers reqd. on sanitary or storm drain manhole where located in pedestrian ways or easement areas. Covers for sanitary manholes shall have 2 holes maximum.
2. Watertight covers required if located where cover may be submerged (no holes).
3. Covers and frames shall be stamped with manufacturer's initials, heat number and point of origin.
4. See Std. Drg. RD337 for manhole safety ladder.
5. See Std. Drg. RD360 for manhole frame adjustment.
6. See ODOT's QPL for alternate manhole adjustment rings.
7. Manhole grate allowed only in locations not subject to bicycle or pedestrian use.
8. See ODOT's QPL for alternate bolt-down products.

The selection and use of this Standard Drawing, while designed in accordance with generally accepted engineering principles and practices, is the sole responsibility of the user and should not be used without consulting a Registered Professional Engineer.

CALC. BOOK NO. N/A

BASELINE REPORT DATE 14-JUL-2014

NOTE: All material and workmanship shall be in accordance with the current Oregon Standard Specifications

OREGON STANDARD DRAWINGS

MANHOLE COVERS AND FRAMES

2015

DATE	REVISION DESCRIPTION

rd356.dgn 14-JUL-2014

RD356

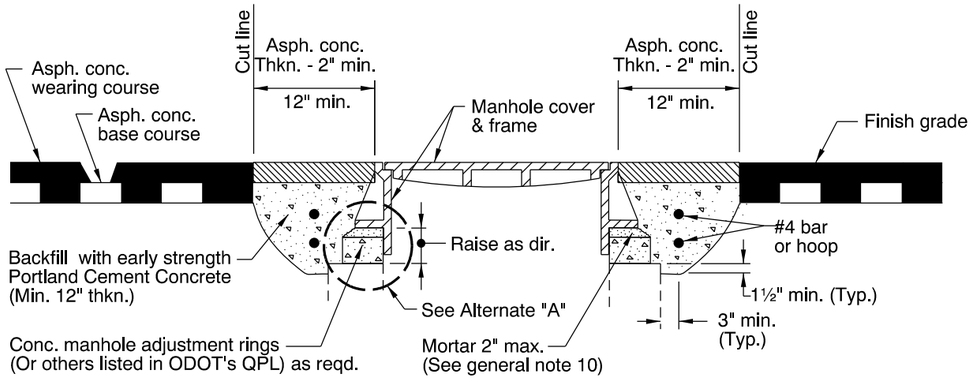

METHOD "A"

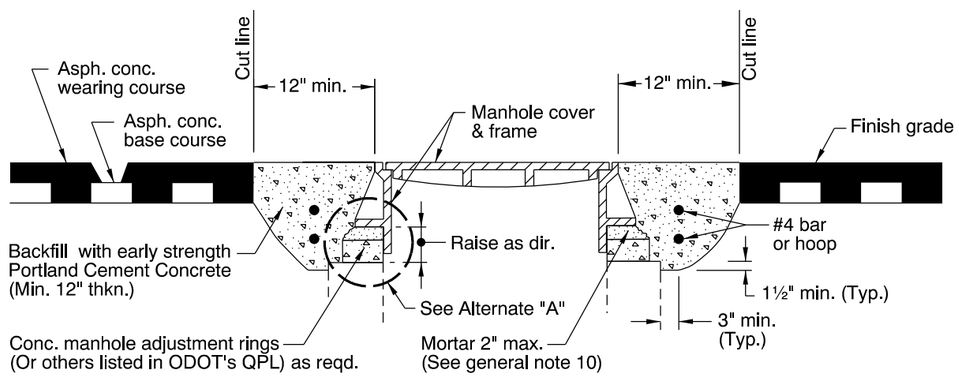

METHOD "B"

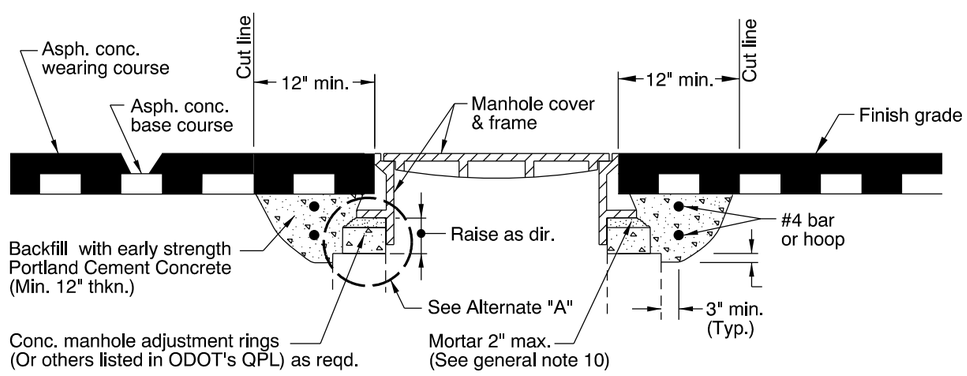

METHOD "C"

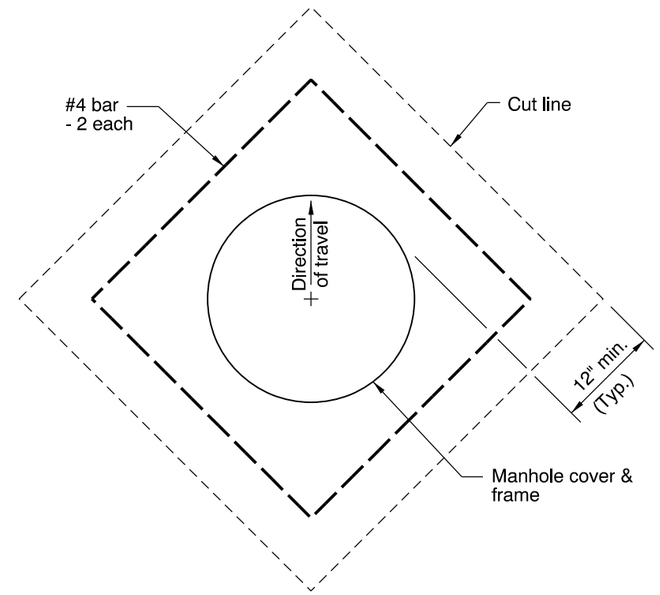

PLAN
SQUARE CUT

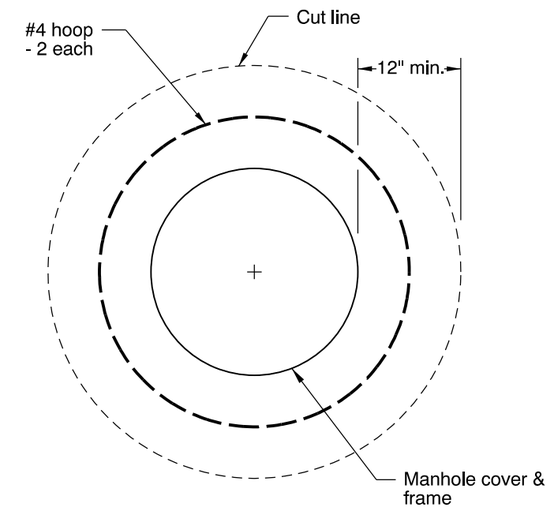

PLAN
CIRCULAR CUT

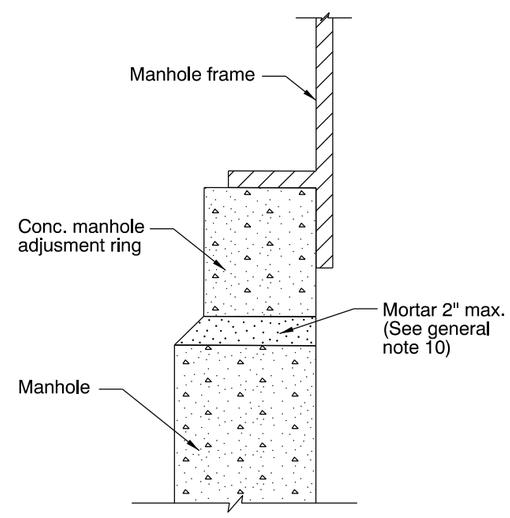

ALTERNATE "A"

GENERAL NOTES FOR ALL DETAILS:

1. Cover manhole with building paper and const. asph. conc. base course and wearing courses.
2. Saw cut square or circular excavation around manhole 12" min. from manhole frame.
3. Raise manhole cover and frame to finish grade by installing conc. manhole adjustment rings and leveling mortar, as shown.
4. Backfill with early strength Portland Cement Concrete. All concrete shall be commercial grade concrete.
5. Protect from traffic loading until conc. has cured to 3000 psi.
6. Apply tack coat to edges of existing pavement before installing patch.
7. Finish joint with asphalt seal and sand.
8. See Std. Drg. RD336 for manhole steps details.
9. See appropriate manhole standard drawings for details not shown.
10. Use epoxy for synthetic grade rings.
11. See Std. Drg. RD336 for tracer wire details.
12. See Std. Drg. RD356 for manhole covers and frames.

CALC. BOOK NO. N/A

BASELINE REPORT DATE 21-JUL-2015

NOTE: All material and workmanship shall be in accordance with the current Oregon Standard Specifications

The selection and use of this Standard Drawing, while designed in accordance with generally accepted engineering principles and practices, is the sole responsibility of the user and should not be used without consulting a Registered Professional Engineer.

OREGON STANDARD DRAWINGS

MANHOLE FRAME ADJUSTMENT

2015

DATE	REVISION DESCRIPTION
07-2015	ADDED DETAIL & REVISED NOTES

21-JUL-2015 rd360.dgn

RD360

NOTES:

1. Provide 1½" local depression at points A & B.
2. Match normal pvmt. grade at points C, D, E & F.
3. Vary transition section slopes to match above points.

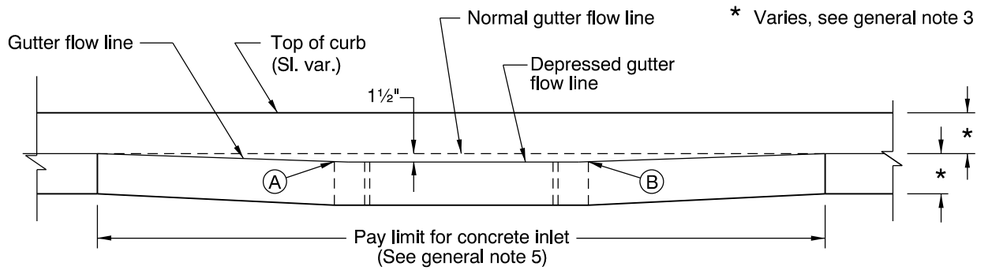

SECTION A-A

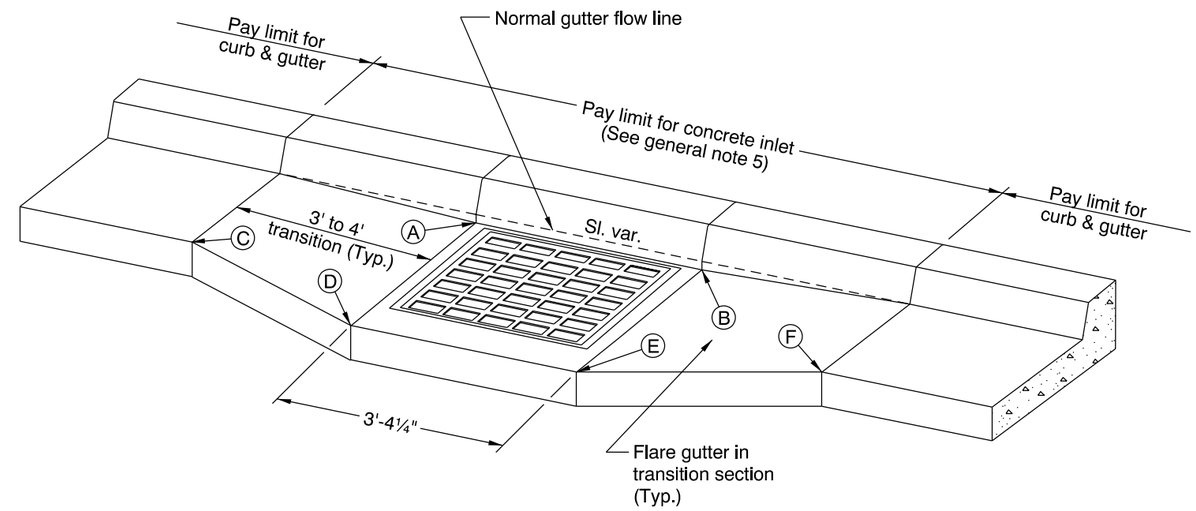

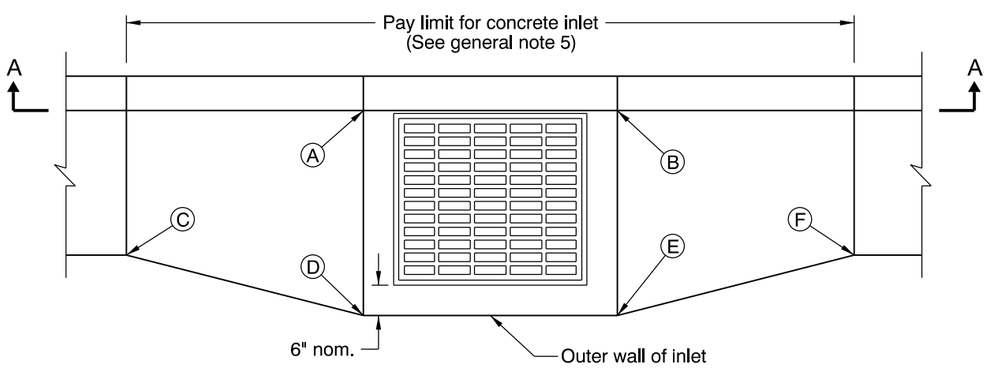

PLAN VIEW

GENERAL NOTES FOR ALL DETAILS:

1. For inlet details, see appropriate inlet standard drawing(s).
2. For frame and grate details, see Std. Drg. RD365.
3. For curb details, see Std. Drgs. RD700 & RD701.
4. All concrete shall be commercial grade concrete.
5. Pay limit for inlet is expanded when curb and gutter are monolithic.

CALC. BOOK NO. N/A

BASELINE REPORT DATE 21-JUL-2015

NOTE: All material and workmanship shall be in accordance with the current Oregon Standard Specifications

The selection and use of this Standard Drawing, while designed in accordance with generally accepted engineering principles and practices, is the sole responsibility of the user and should not be used without consulting a Registered Professional Engineer.

OREGON STANDARD DRAWINGS

GUTTER TRANSITION AT INLET

2015

DATE	REVISION DESCRIPTION
07-2015	REVISED NOTES

rd363.dgn 21-JUL-2015

RD363

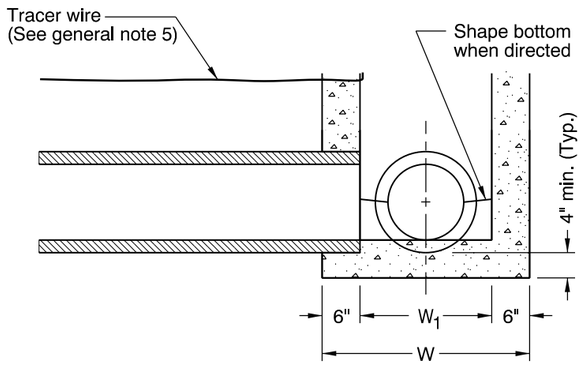

DETAIL A
WITHOUT SUMP

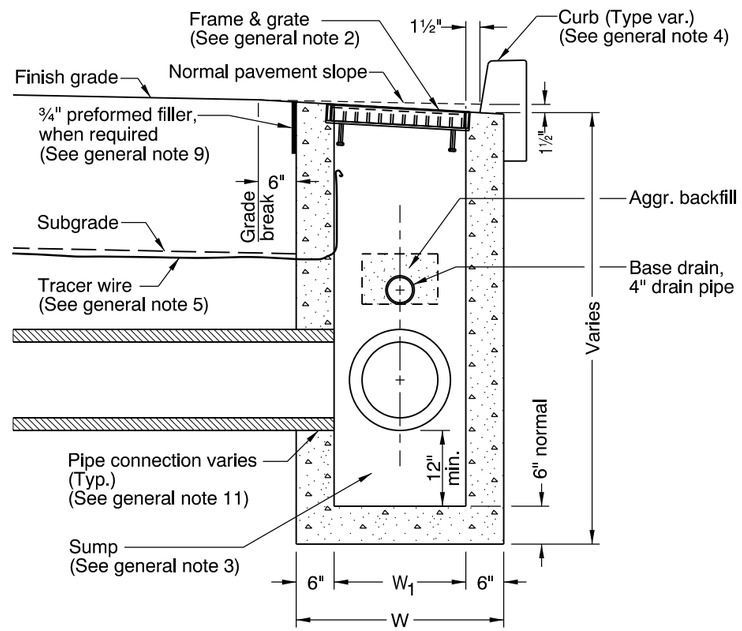

SECTION B - B

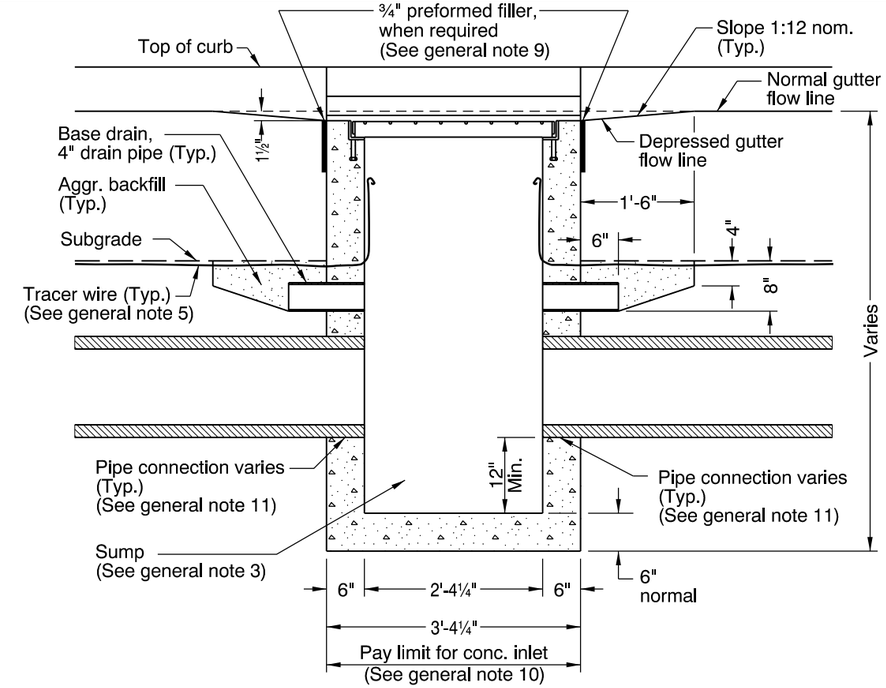

SECTION A - A

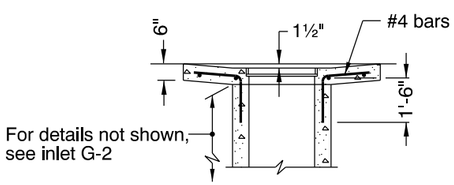

SECTION C-C

NOTE:

All reinforcement to be placed 2" clear of nearest face of concrete unless shown or noted otherwise

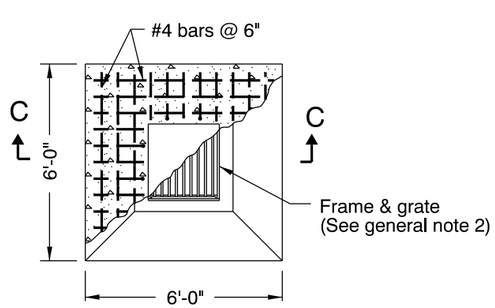

PLAN
TYPE G-2MA

TABLE A		
INLET TYPE	W	W_1
G-1	2'-8⅞"	1'-8⅞"
G-2, G-2M, G-2MA	3'-3⅜"	2'-3⅜"

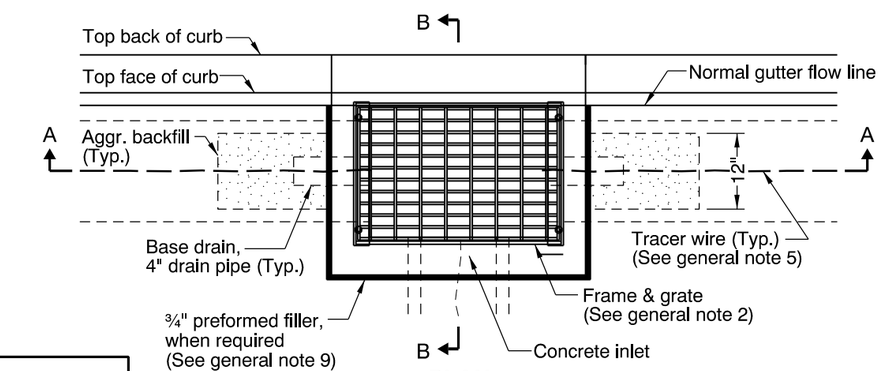

PLAN
TYPE G-1, G-2, G-2M

GENERAL NOTES FOR ALL DETAILS:

1. Where precast inlets are used as an alternate to cast-in-place inlets, a 4" compacted leveling bed of sand or ¼"-0 crushed aggregate shall be provided. All precast inlets shall conform to requirements of ASTM C913.
2. Graphics show G-1 inlet with Type 2 grate. See Table A for inlet dimensions.
   Type 1 grate allowed only in locations not subject to bicycle or pedestrian use.
   For frame and grate details, see Std. Drg. RD365.
3. Provide sump only where shown on plans, and allowed by jurisdiction. See Detail A for inlet without sump.
4. For curb details, see Std. Drgs. RD700 & RD701.
5. See Std. Drg. RD336 for tracer wire details, or approved alternate.
6. Max. pipe diameter varies with pipe material.
7. Location, elevation, diameter, slope, and number of pipe(s) varies, see project plans.
8. All concrete shall be commercial grade concrete.
9. ¾" preformed filler (in concrete pavement or gutter only) to extend through thickness of concrete.
10. See Std. Drg. RD363 for gutter transition section, when curb and gutter are required.
11. See Std. Drg. RD339 for pipe to structure connections.

CALC. BOOK NO. N/A

BASELINE REPORT DATE 21-JUL-2015

NOTE: All material and workmanship shall be in accordance with the current Oregon Standard Specifications

The selection and use of this Standard Drawing, while designed in accordance with generally accepted engineering principles and practices, is the sole responsibility of the user and should not be used without consulting a Registered Professional Engineer.

OREGON STANDARD DRAWINGS

CONCRETE INLETS
TYPE G-1, G-2, G-2M, & G-2MA

2015

DATE	REVISION DESCRIPTION
07-2015	REVISED NOTES

rd364.dgn 21-JUL-2015

RD364

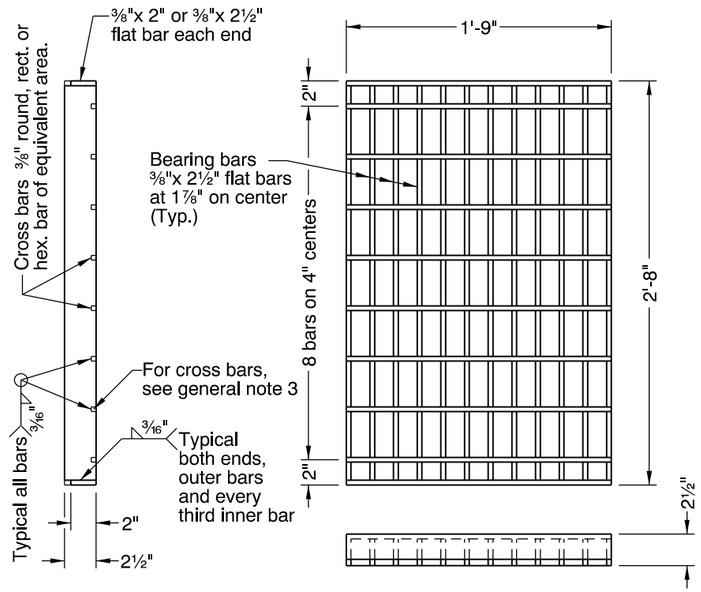

G-1, CG-1 GRATE
(TYPE 2)
(Bicycle-safe)

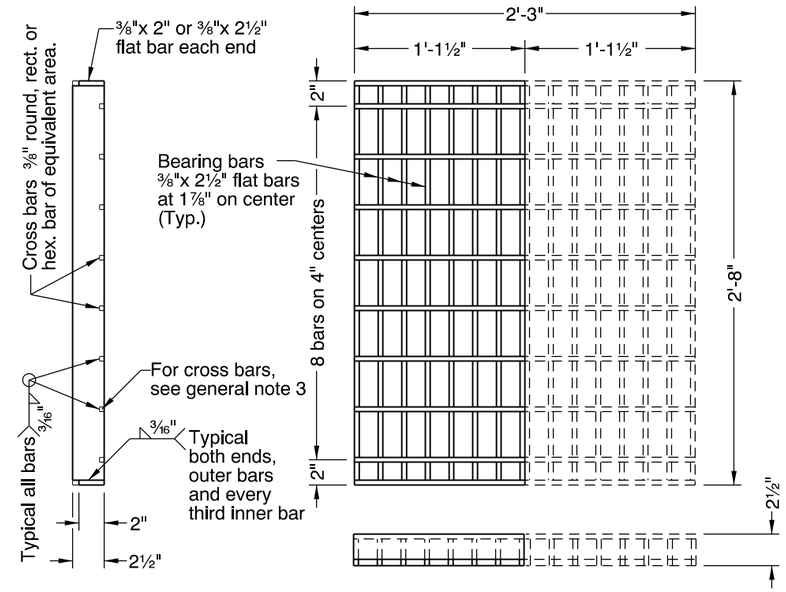

G-2, G-2M, G-2MA, CG-2 GRATE
(TYPE 2)
(Bicycle-safe)
(2 grates required per inlet, as shown)

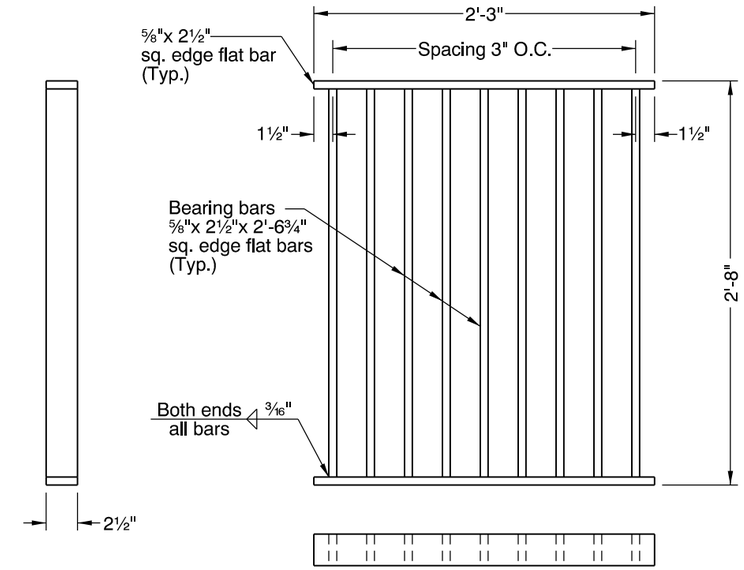

G-2, G-2M, G-2MA, CG-2 GRATE
(TYPE 1)
(See general note 2)

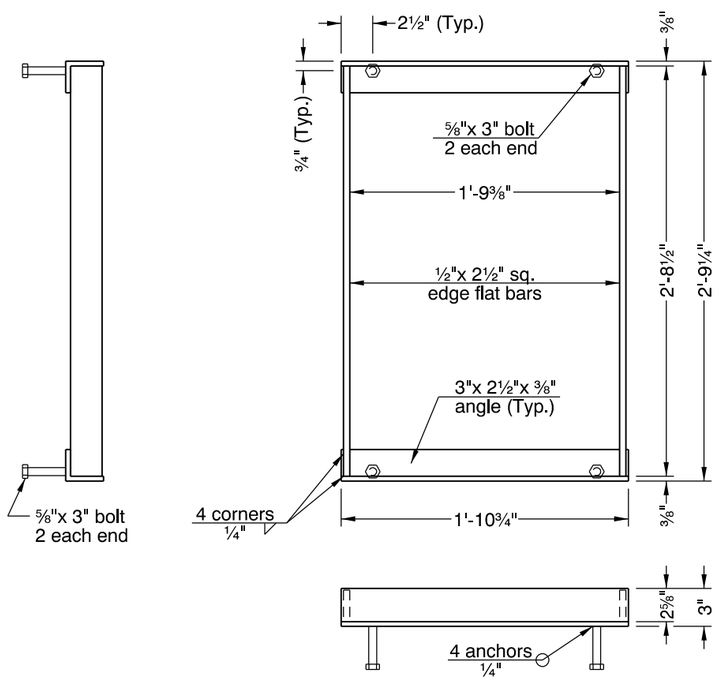

G-1, CG-1 FRAME

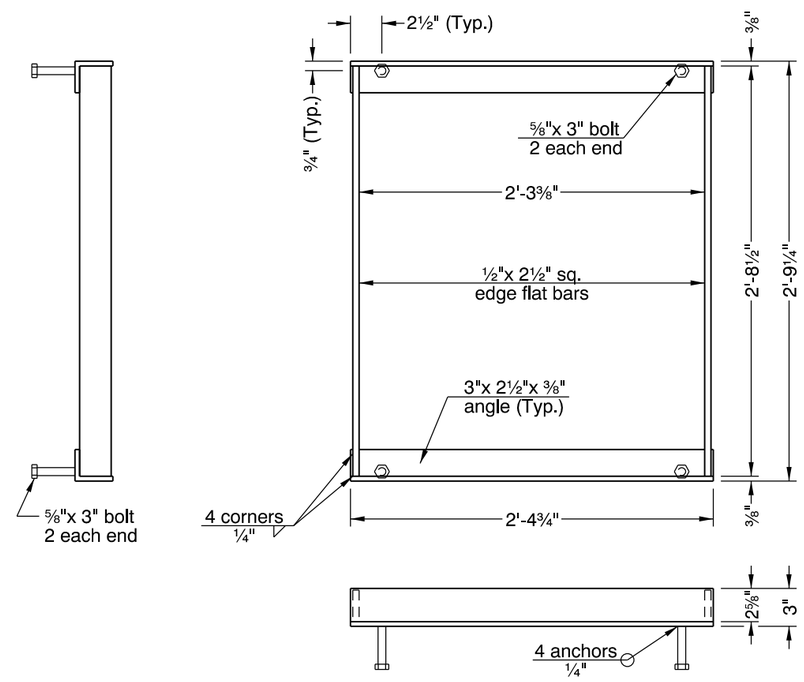

G-2, G-2M, G-2MA, CG-2 FRAME

GENERAL NOTES FOR ALL DETAILS:

1. For inlet details, see appropriate inlet standard drawing(s).
2. Type 1 grate allowed only in locations not subject to bicycle or pedestrian use.
3. 3/8" cross bars shall be flush with the top of grate surface and may be fillet welded, resistance welded or electroforged to bearing bars.
4. Hot dip galvanize after fabrication.
5. Cast iron grate and frame are acceptable alternates. See ODOT's QPL.

CALC. BOOK NO. N/A

BASELINE REPORT DATE 14-JUL-2014

NOTE: All material and workmanship shall be in accordance with the current Oregon Standard Specifications

The selection and use of this Standard Drawing, while designed in accordance with generally accepted engineering principles and practices, is the sole responsibility of the user and should not be used without consulting a Registered Professional Engineer.

OREGON STANDARD DRAWINGS

FRAMES & GRATES FOR CONCRETE INLETS

2015

DATE	REVISION DESCRIPTION

rd365.dgn 14-JUL-2014

RD365

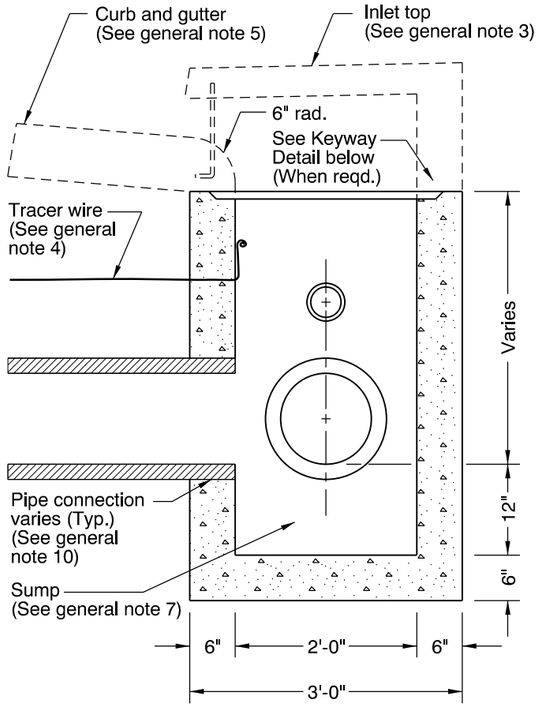

SECTION B - B

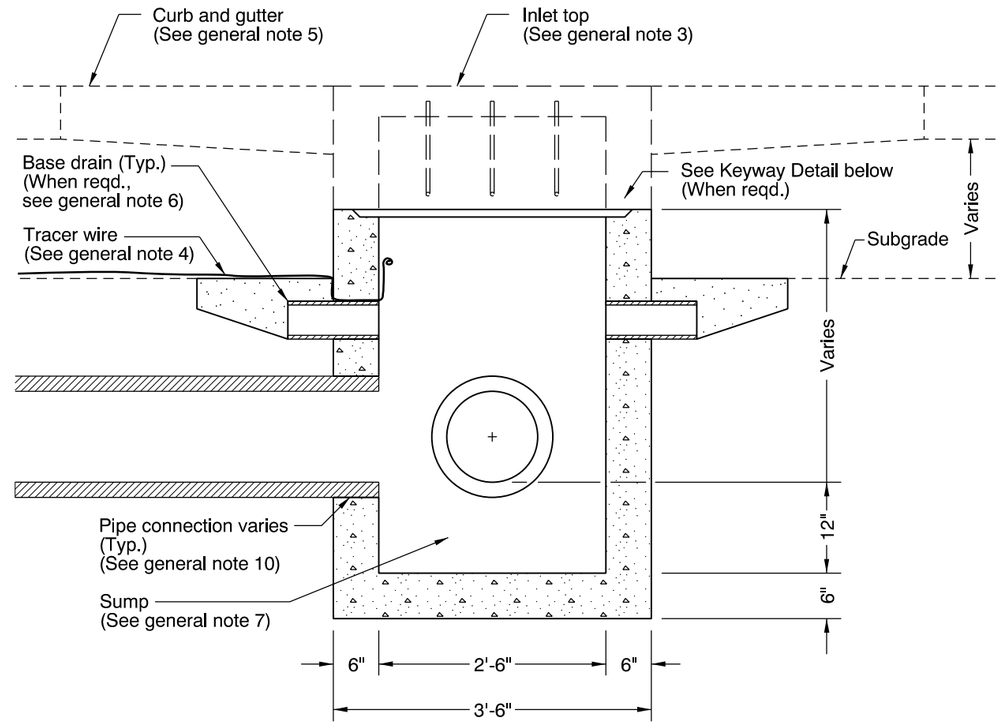

SECTION A - A

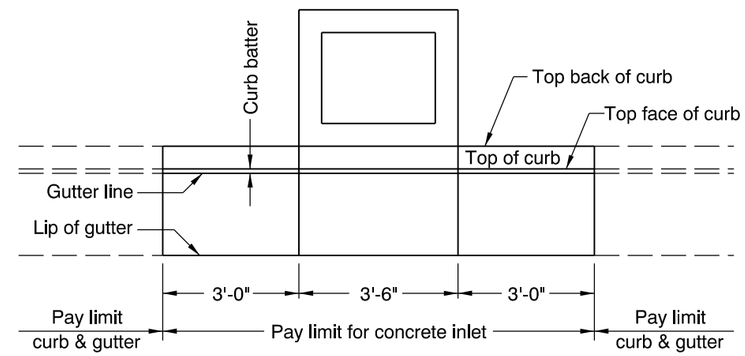

PLAN

PAY LIMIT

GENERAL NOTES FOR ALL DETAILS:

1. All concrete shall be commercial grade concrete.
2. Inlet base may be cast-in-place or precast. Where precast inlet base is used as an alternate, a 4" compacted leveling bed of sand or ¼"-0 crushed aggregate shall be provided. All precast inlets shall conform to requirements of ASTM C913.
3. See Std. Drgs. RD372 & RD373 for inlet top details.
4. See Std. Drg. RD336 for tracer wire details, or approved alternate.
5. See Std. Drgs. RD700 & RD701 for curb and gutter details.
6. See Std. Drg. RD364 for base drain details.
7. Provide sump only where shown on plans, and allowed by jurisdiction. For sump details, see Std. Drg. RD364.
8. Location, elevation, diameter, slope, and number of pipe(s) varies, see project plans.
9. Max. pipe diameter varies with pipe material.
10. See Std. Drg. RD339 for pipe to structure connections.

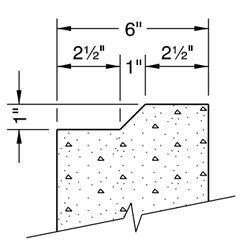

KEYWAY DETAIL

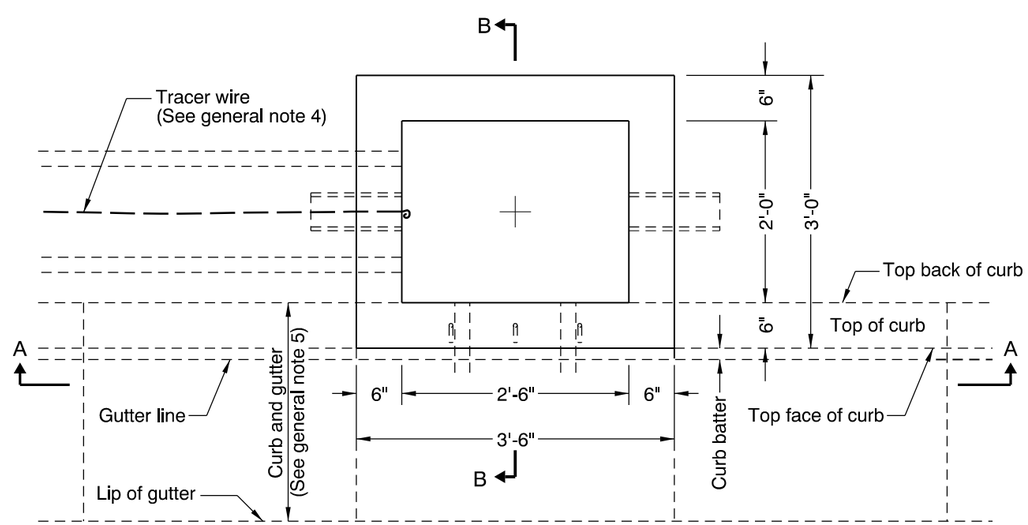

PLAN

CALC. BOOK NO. N/A

BASELINE REPORT DATE 21-JUL-2015

NOTE: All material and workmanship shall be in accordance with the current Oregon Standard Specifications

The selection and use of this Standard Drawing, while designed in accordance with generally accepted engineering principles and practices, is the sole responsibility of the user and should not be used without consulting a Registered Professional Engineer.

OREGON STANDARD DRAWINGS

CONCRETE INLET BASE
TYPE CG-3

2015

DATE	REVISION DESCRIPTION
07-2015	REVISED DETAIL, REVISED AND ADDED NOTES

rd371.dgn 21-JUL-2015

RD371

Effective Date: December 1, 2015 - May 31, 2016

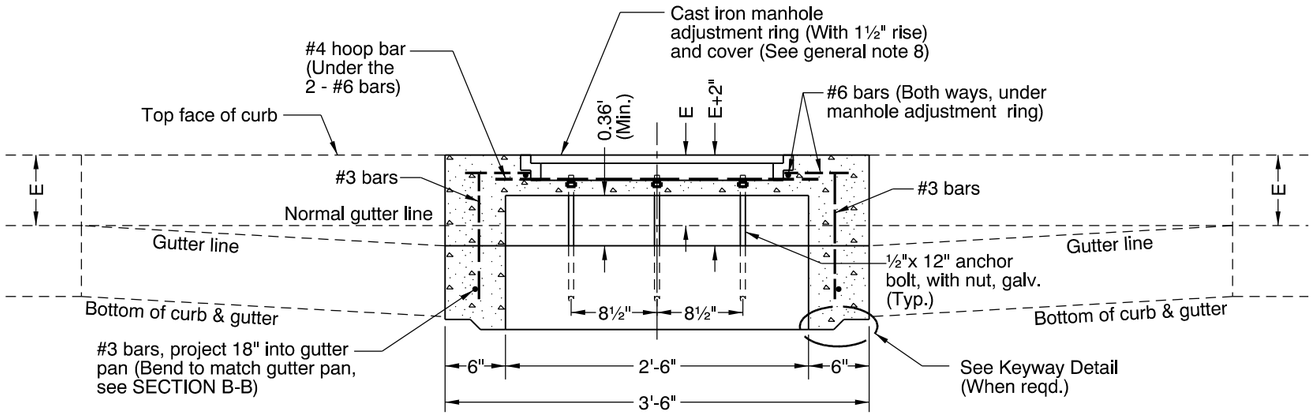

SECTION A - A

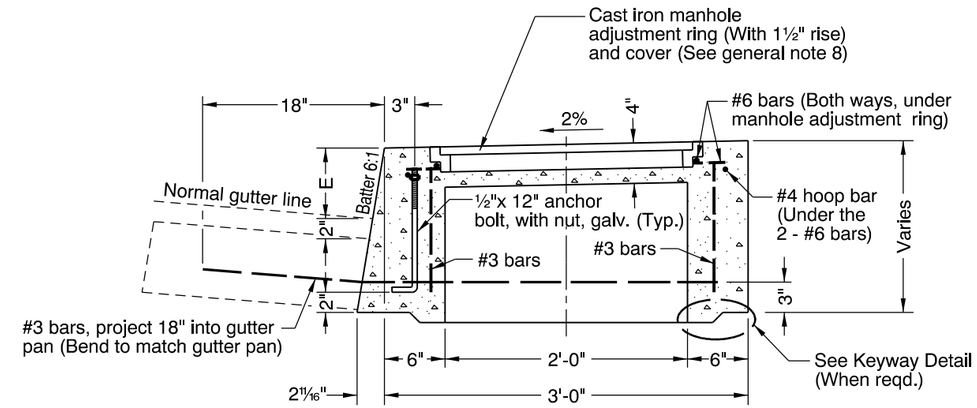

SECTION B - B

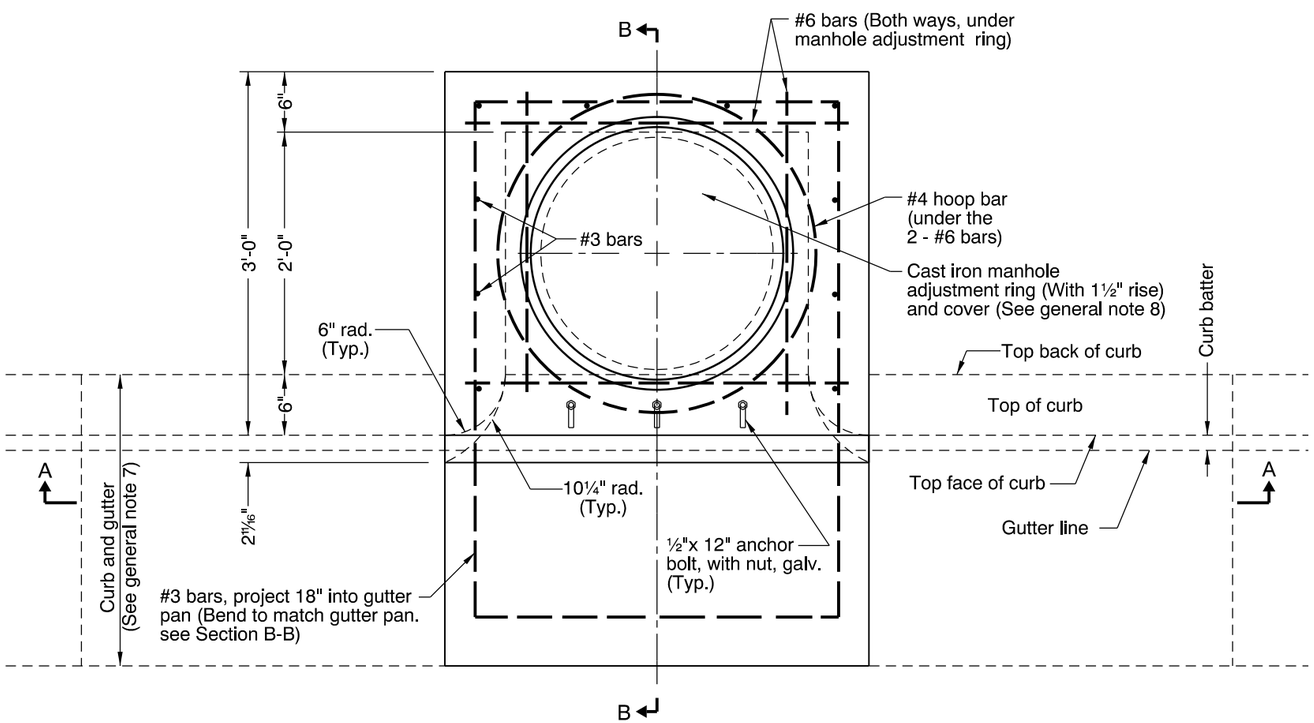

PLAN

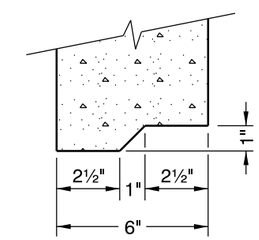

KEYWAY DETAIL

GENERAL NOTES FOR ALL DETAILS:

1. All concrete shall be commercial grade concrete.
2. Inlet top may be cast-in-place or precast. All precast inlets shall conform to requirements of ASTM C913.
3. All reinforcement shall be 2" clear of nearest face of conc., unless otherwise shown.
4. Vary anchor bolt length and reinforcing bar placement as required by curb exposure E (see note 7 below).
5. See Std. Drg. RD371 for inlet base details.
6. See Std. Drg. RD371 for inlet pay limit.
7. See Std. Drgs. RD700 & RD701 for curb and gutter details.
8. See Std. Drg. RD356 for cast iron manhole adjustment ring and cover.

CALC. BOOK NO. N/A

BASELINE REPORT DATE 21-JUL-2015

NOTE: All material and workmanship shall be in accordance with the current Oregon Standard Specifications

The selection and use of this Standard Drawing, while designed in accordance with generally accepted engineering principles and practices, is the sole responsibility of the user and should not be used without consulting a Registered Professional Engineer.

OREGON STANDARD DRAWINGS

CONCRETE INLET TOP, OPTION 1
TYPE CG-3

2015

DATE	REVISION DESCRIPTION
07-2015	REVISED AND ADDED NOTES

rd372.dgn 21-JUL-2015

RD372

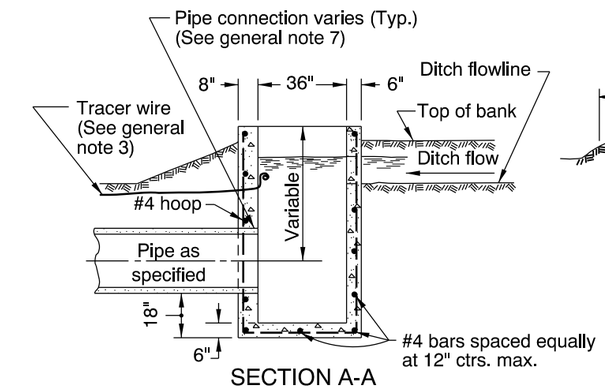

SECTION A-A

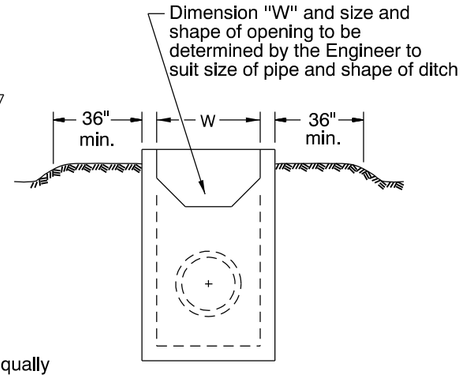

END VIEW

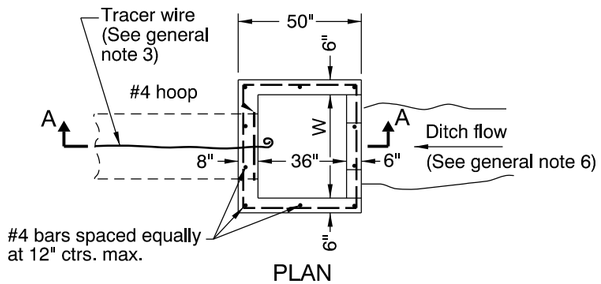

PLAN

SIPHON BOX

NOTE:
All reinforcement to be #4 bars at 12" ctrs. max.

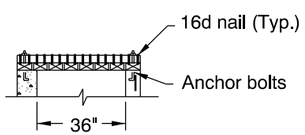

SECTION A-A

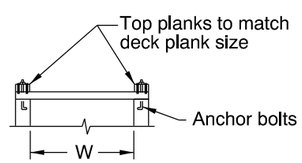

END VIEW

NOTE:
All wood shall be pressure treated.

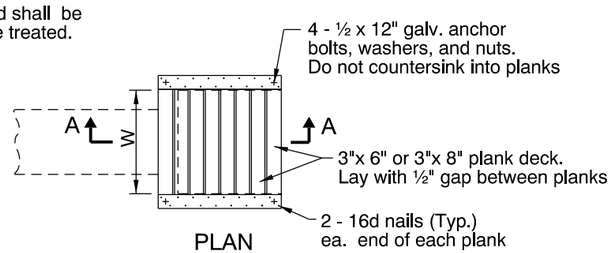

PLAN

SIPHON BOX COVER

SIPHON BOX AND COVER

NOTE:
X & Y dimensions to be determined by field measurements.

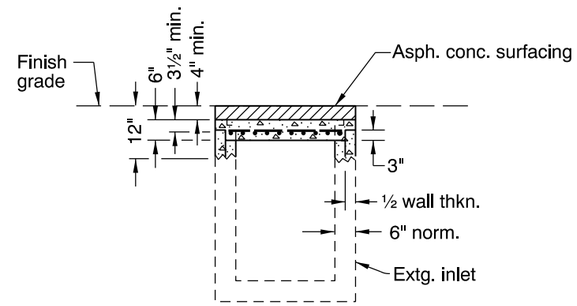

SECTION A-A

Place bars in concrete inlet cap 1½" min. clear of bottom face of concrete and 3½" min. clear of top face of concrete.

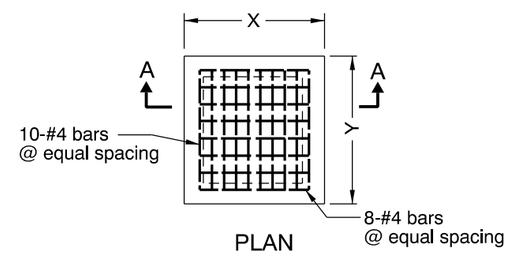

PLAN

CONCRETE INLET CAP

NOTE:
X & Y dimensions to be determined by field measurements.

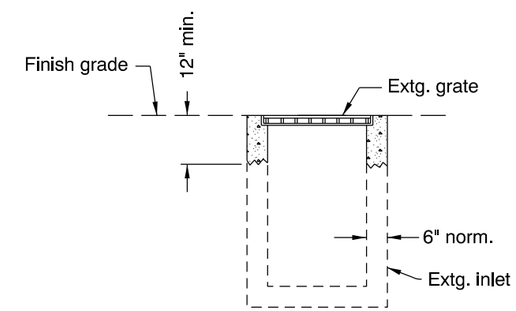

SECTION A-A

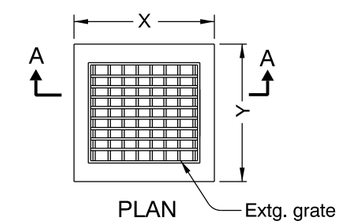

PLAN

ADJUST EXISTING INLET
(For details not shown, see Std. Drg. RD366)

GENERAL NOTES FOR ALL DETAILS:

1. All reinforcement to be placed a minimum of 2" clear of nearest face of concrete unless otherwise shown or noted.
2. If metal frame and grate is reqd. conform to details for Type 1 grate. Size frame and grate to match dimensions of siphon box used, see Std. Drg. RD364.
3. See Std. Drg. RD336 for tracer wire details.
4. Max. pipe diameter varies with pipe material.
5. All precast products shall conform to requirements of ASTM C913.
6. Alignment of ditch, siphon box, and pipe varies, see project plans.
7. See Std. Drg. RD339 for pipe to structure connections.

CALC. BOOK NO. N/A

BASELINE REPORT DATE 14-JUL-2014

NOTE: All material and workmanship shall be in accordance with the current Oregon Standard Specifications

The selection and use of this Standard Drawing, while designed in accordance with generally accepted engineering principles and practices, is the sole responsibility of the user and should not be used without consulting a Registered Professional Engineer.

OREGON STANDARD DRAWINGS

MISCELLANEOUS DRAINAGE STRUCTURES SIPHON BOX, INLET CAP & INLET ADJUSTMENT

2015

DATE	REVISION DESCRIPTION

rd376.dgn 14-JUL-2014

RD376

rd386.dgn 14-JUL-2014

ALLOWABLE FILL HEIGHTS FOR CIRCULAR CONCRETE PIPE

HS 25 - 44 LIVE LOAD

PIPE DIAMETER (Inches)	NONREINFORCED CONCRETE PIPE				REINFORCED PIPE					
	CLASS 2		CLASS 3		CLASS III		CLASS IV		CLASS V	
	MINIMUM COVER (Feet)	MAXIMUM COVER (Feet)	MINIMUM COVER (Feet)	MAXIMUM COVER (Feet)	MINIMUM COVER (Feet)	MAXIMUM COVER (Feet)	MINIMUM COVER (Feet)	MAXIMUM COVER (Feet)	MINIMUM COVER (Feet)	MAXIMUM COVER (Feet)
4	2.0	19	2.0	23						
6	2.0	20	2.0	24						
8	2.0	21	2.0	23						
10	2.0	20	2.0	24						
12	2.0	22	2.0	24	1.5	17	1.0	27	0.5	41
15	2.0	25	2.0	28	1.5	18	1.0	27	0.5	42
18	2.0	29	2.0	31	1.5	18	1.0	27	0.5	42
21	2.0	31	2.0	35	1.5	17	1.0	27	0.5	42
24	2.0	32	2.0	39	1.5	17	1.0	27	0.5	42
27	2.0	34	2.0	41	1.5	17	1.0	27	0.5	41
30	2.0	37	2.0	41	1.5	17	1.0	27	0.5	41
33	2.0	38	2.0	43	1.5	17	1.0	27	0.5	41
36	2.0	39	2.0	44	1.5	17	1.0	26	0.5	41
42					1.5	17	1.0	26	0.5	41
48					1.5	16	1.0	26	0.5	41
54					1.5	16	1.0	26		
60					1.5	16	1.0	26		
66					1.5	16	1.0	26		
72					1.5	16	1.0	25		

GENERAL NOTES FOR ALL TABLES:

1. Maximum height of cover is greatest vertical distance from top of pipe to finish grade.
2. Minimum height of cover is least vertical distance from top of pipe to subgrade.
3. For ODOT, pipes with diameters greater than 72" must be reviewed by the Geo-Environmental Section.
4. For ODOT, pipes with maximum cover greater than those shown in the Tables shall be approved by the Senior Standards Engineer.
5. For multiple pipe installations, see Std. Drg. RD300.
6. Open ends of pipes normally require a site specific design, and may require special treatment (sloped ends, culvert embankment protection, paved end slopes, safety end sections, or other measures).
   See special details or Standard Drawings as called for on plans.

CALC. BOOK NO. RD07-02

BASELINE REPORT DATE 12-JUL-2011

NOTE: All material and workmanship shall be in accordance with the current Oregon Standard Specifications

The selection and use of this Standard Drawing, while designed in accordance with generally accepted engineering principles and practices, is the sole responsibility of the user and should not be used without consulting a Registered Professional Engineer.

OREGON STANDARD DRAWINGS

FILL HEIGHT TABLE FOR CIRCULAR CONCRETE PIPE

2015

DATE	REVISION DESCRIPTION

RD386

PIPE	SOLID WALL PVC		
DIAMETER (Inches)	MINIMUM COVER (Feet)	MAXIMUM COVER (Feet)	REMARKS
4	2.0	40	ASTM D 3034 SDR35 (46 psi stiffness)
6	2.0	40	
8	2.0	40	
10	2.0	40	
12	2.0	40	
15	2.0	40	
18	2.0	40	ASTM F 679 (46 psi stiffness)
21	2.0	40	
24	2.0	40	
27	2.0	40	
30	2.0	40	
33	2.0	40	
36	2.0	40	
42	2.0	40	
48	2.0	40	

PIPE	PROFILE WALL PVC		
DIAMETER (Inches)	MINIMUM COVER (Feet)	MAXIMUM COVER (Feet)	REMARKS
4	2.0	40	ASTM F 794 Series 46 (46 psi stiffness)
6	2.0	40	
8	2.0	40	
10	2.0	40	
12	2.0	40	
15	2.0	40	
18	2.0	40	
21	2.0	40	
24	2.0	40	
27	2.0	40	
30	2.0	40	
33	2.0	40	
36	2.0	40	
39	2.0	40	
42	2.0	40	
45	2.0	40	
48	2.0	40	

GENERAL NOTES FOR ALL TABLES:

1. Maximum height of cover is greatest vertical distance from top of pipe to finish grade.
2. Minimum height of cover is least vertical distance from top of pipe to subgrade.
3. For ODOT, pipes with maximum cover greater than those shown in the Tables shall be approved by the Senior Standards Engineer.
4. For multiple pipe installations, see Std. Drg. RD300.
5. Open ends of pipes normally require a site specific design, and may require special treatment (sloped ends, culvert embankment protection, paved end slopes, safety end sections, or other measures).
   See special details or Standard Drawings as called for on plans.

PIPE	SOLID WALL PVC		
DIAMETER (Inches)	MINIMUM COVER (Feet)	MAXIMUM COVER (Feet)	REMARKS
14	2.0	41	AWWA C905 DR 32.5 (57 psi stiffness)
16	2.0	41	
18	2.0	41	
20	2.0	41	
24	2.0	41	
30	2.0	41	
36	2.0	41	
42	2.0	41	
48	2.0	41	

PIPE	SOLID WALL PVC		
DIAMETER (Inches)	MINIMUM COVER (Feet)	MAXIMUM COVER (Feet)	REMARKS
14	1.0	46	AWWA C905 DR 26 (115 psi stiffness)
16	1.0	46	
18	1.0	46	
20	1.0	46	
24	1.0	46	
30	1.0	46	
36	1.0	46	

PIPE	SOLID WALL PVC		
DIAMETER (Inches)	MINIMUM COVER (Feet)	MAXIMUM COVER (Feet)	REMARKS
14	1.0	48	AWWA C905 DR 25 (129 psi stiffness)
16	1.0	48	
18	1.0	48	
20	1.0	48	
24	1.0	48	
30	1.0	48	
36	1.0	48	
42	1.0	48	
48	1.0	48	

PIPE	SOLID WALL PVC		
DIAMETER (Inches)	MINIMUM COVER (Feet)	MAXIMUM COVER (Feet)	REMARKS
14	1.0	61	AWWA C905 DR 21 (224 psi stiffness)
16	1.0	61	
18	1.0	61	
20	1.0	61	
24	1.0	61	
30	1.0	61	
36	1.0	61	

PIPE	SOLID WALL PVC		
DIAMETER (Inches)	MINIMUM COVER (Feet)	MAXIMUM COVER (Feet)	REMARKS
4	1.0	48	AWWA C900 DR 25 (129 psi stiffness)
6	1.0	48	
8	1.0	48	
10	1.0	48	
12	1.0	48	

PIPE	SOLID WALL PVC		
DIAMETER (Inches)	MINIMUM COVER (Feet)	MAXIMUM COVER (Feet)	REMARKS
4	1.0	69	AWWA C900 DR 18 (364 psi stiffness)
6	1.0	69	
8	1.0	69	
10	1.0	69	
12	1.0	69	

PIPE	SOLID WALL PVC		
DIAMETER (Inches)	MINIMUM COVER (Feet)	MAXIMUM COVER (Feet)	REMARKS
4	1.0	109	AWWA C900 DR 14 (814 psi stiffness)
6	1.0	109	
8	1.0	109	
10	1.0	109	
12	1.0	109	

CALC. BOOK NO. RD11-02

BASELINE REPORT DATE 13-JUN-2011

NOTE: All material and workmanship shall be in accordance with the current Oregon Standard Specifications

The selection and use of this Standard Drawing, while designed in accordance with generally accepted engineering principles and practices, is the sole responsibility of the user and should not be used without consulting a Registered Professional Engineer.

OREGON STANDARD DRAWINGS

FILL HEIGHT TABLES FOR PVC PIPE

2015

DATE	REVISION DESCRIPTION

rd388.dgn 14-JUL-2014

RD388

Effective Date: December 1, 2015 - May 31, 2016

PIPE	DUAL WALL POLYPROPYLENE		
DIAMETER (Inches)	MINIMUM COVER (Feet)	MAXIMUM COVER (Feet)	REMARKS
12	1.0	28	ASTM F 2736 & AASHTO M330
15	1.0	30	
18	1.0	26	
24	1.0	22	
30	1.0	22	
36	1.0	22	AASHTO M330
42	1.0	22	
48	1.0	21	
60	1.0	23	

PIPE	TRIPLE WALL POLYPROPYLENE		
DIAMETER (Inches)	MINIMUM COVER (Feet)	MAXIMUM COVER (Feet)	REMARKS
30	1.0	22	ASTM F 2764
36	1.0	19	
48	1.0	16	
60	2.0	22	

GENERAL NOTES FOR ALL TABLES:

1. Maximum height of cover is greatest vertical distance from top of pipe to finish grade.
2. Minimum height of cover is least vertical distance from top of pipe to subgrade.
3. For ODOT, pipes with maximum cover greater than those shown in the Tables shall be approved by the Senior Standards Engineer.
4. For multiple pipe installations, see Std. Drg. RD300.
5. Heavy solid line denotes boundary between minimum cover requirements.
6. Open ends of pipes normally require a site specific design, and may require special treatment (sloped ends, culvert embankment protection, paved end slopes, safety end sections, or other measures).
   See special details or Standard Drawings as called for on plans.

CALC. BOOK NO. RD11-01

BASELINE REPORT DATE 21-JUL-2015

NOTE: All material and workmanship shall be in accordance with the current Oregon Standard Specifications

The selection and use of this Standard Drawing, while designed in accordance with generally accepted engineering principles and practices, is the sole responsibility of the user and should not be used without consulting a Registered Professional Engineer.

OREGON STANDARD DRAWINGS

FILL HEIGHT TABLES FOR POLYPROPYLENE PIPE

2015

DATE	REVISION DESCRIPTION
07-2015	REVISED TABLE

rd393.dgn 21-JUL-2015

RD393

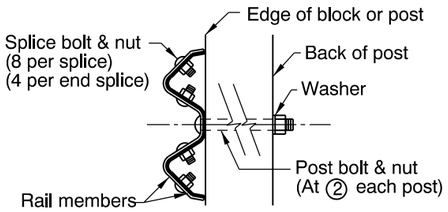

1. When required by the plans, post bolts to extend beyond the tightened nuts within limits of ¼" to ½".
2. When steel posts are used see "APPURTENANCES" for modified bolt detail, Std. Drg. RD415.
3. All post bolt threads to be set after assembly for wrench removal only.

FITTINGS

NOTES:
1. Rail height measured from final paved surface at face of rail (Typ. all types).
2. Final paved surfacing to extend to face of post.
3. Drainage curb alignment same as face of guardrail.

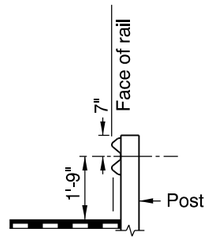

TYPE 1

(Use restricted to non-roadway applications)

GUARDRAIL

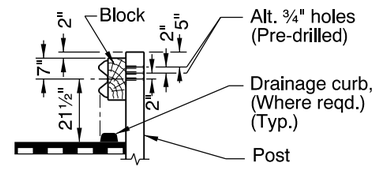

INITIAL INSTALLATION

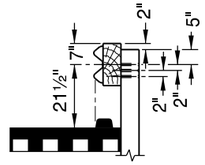

FUTURE ADJUSTMENT

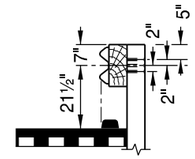

ALTERNATE
INITIAL INSTALLATION
OR FUTURE ADJUSTMENT

TYPES 2A & 3

(See General Note 3)
(For Type 3 use double thickness (2) rail elements)

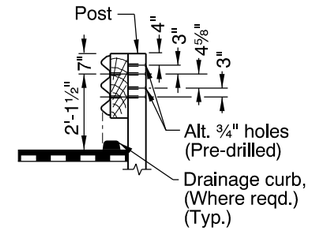

INITIAL INSTALLATION

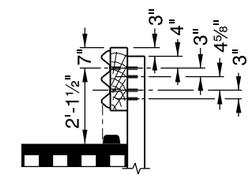

RAIL AFTER OVERLAY
(Adjust as shown)

TYPE 4

ASSEMBLY DETAILS

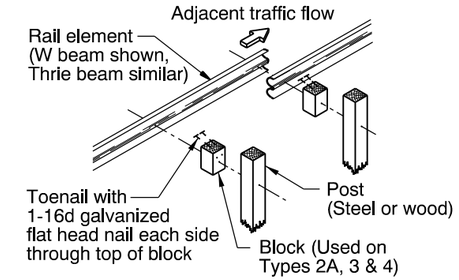

RELATION OF PARTS

TABLE OF POST SPACING				
TYPE	1	2A	3	4
SPACING	12'-6"	6'-3"	3'-1½"	6'-3"

NORMAL RAIL ELEMENT DATA			
Type	Rail	Effective Lengths	Thkn. *
1, 2A, 3	W beam	6.25', 12.5', 25'	0.105" & 0.135"
4	Thrie beam	6.25', 12.5', 25'	0.105" & 0.135"

* Base metal thkn. nom. (Before galv.)

METAL MEDIAN BARRIER

NOTE:
Median barrier post spacing 6'-3".
See end construction for variations.

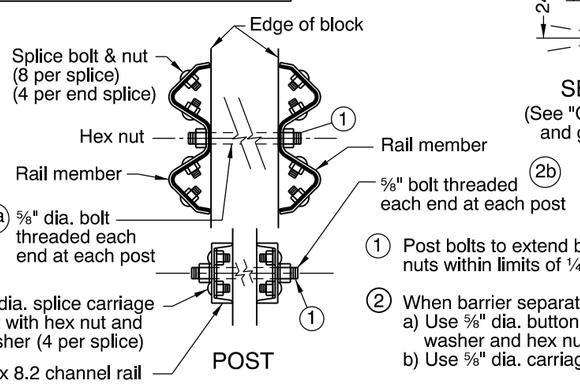

POST

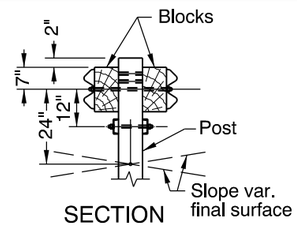

SECTION
(See "Guardrail" details and general note 3)

① Post bolts to extend beyond the tightened nuts within limits of ¼" to ½".

② When barrier separates to double post mounting:
a) Use ⅝" dia. button or alternate bolt with washer and hex nut.
b) Use ⅝" dia. carriage bolt with washer and nut.

CHANNEL RAIL AND SPLICE PLATE
(METAL MEDIAN BARRIER)

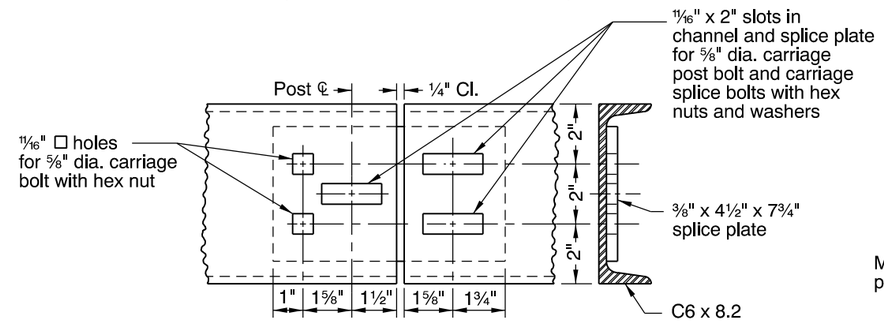

NOTE:
Clearance to be 1⁹⁄₁₆" at rail splice for bridge expansion joints.

ASSEMBLY DETAILS

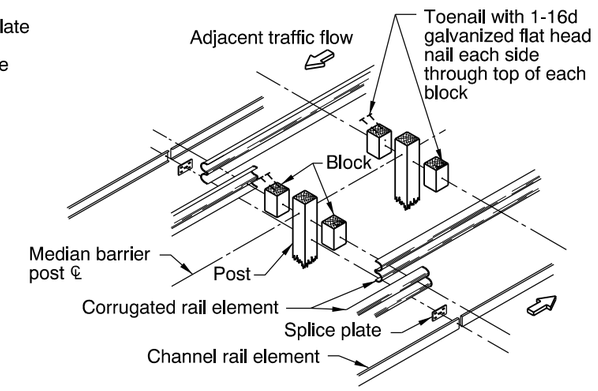

RELATION OF PARTS

METAL MEDIAN BARRIER/SHOULDER GUARDRAIL INSTALLATION AT BRIDGE DECK EXPANSION JOINT

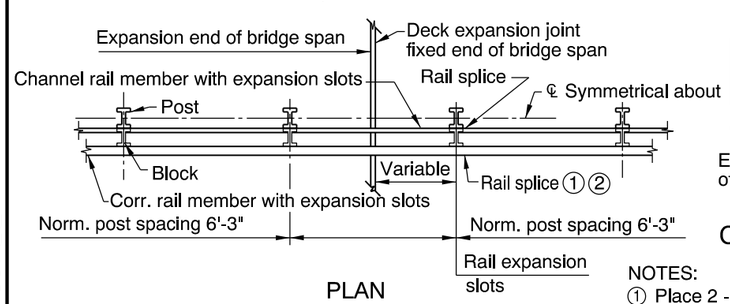

PLAN

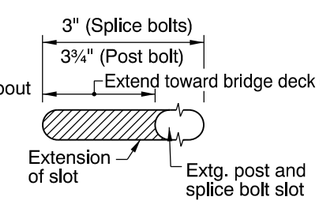

CORRUGATED RAIL

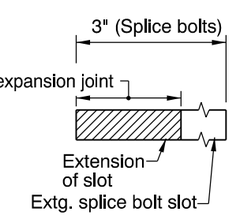

CHANNEL RAIL AND
SPLICE PLATE

NOTES:
① Place 2 - 1⁄32" polytetrafluoroethylene (TFE) sheets between corrugated rail members. The sheets shall be 12½" x 1'-7".

② Adjust nuts to provide a sliding fit and set threads to prevent loosening.

GENERAL NOTES FOR ALL DETAILS:

1. For details of parts, see Std. Drgs. RD405, RD410 & RD415.
2. For details of guardrail installation, see Std. Drgs. RD420, RD425, RD430, RD435 & RD440.
3. Use "Alternate Initial Installation", at bridge ends (See Std. Drg. RD440), adjacent to P.C.C. pvmt., for temporary guardrail, to match existing guardrail, for Type 1 rail or as directed.
4. See Std. Drg. RD701 for drainage curbs, where required.
5. Lap guardrail in direction of adjacent traffic.

CALC. BOOK NO. N/A

BASELINE REPORT DATE 12-JAN-2015

NOTE: All material and workmanship shall be in accordance with the current Oregon Standard Specifications

The selection and use of this Standard Drawing, while designed in accordance with generally accepted engineering principles and practices, is the sole responsibility of the user and should not be used without consulting a Registered Professional Engineer.

OREGON STANDARD DRAWINGS

GUARDRAIL AND METAL MEDIAN BARRIER

2015

DATE	REVISION DESCRIPTION
01-2015	REVISED NOTES

12-JAN-2015

rd400.dgn

RD400

POSTS

STEEL

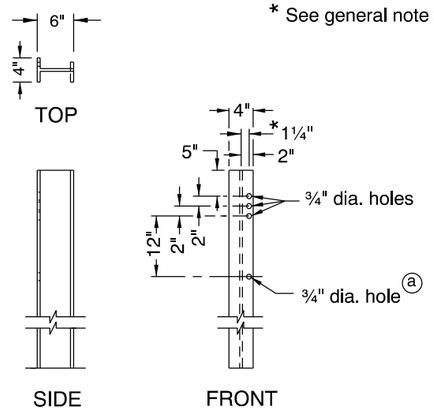

TYPE 2A, 3 OR METAL MEDIAN BARRIER

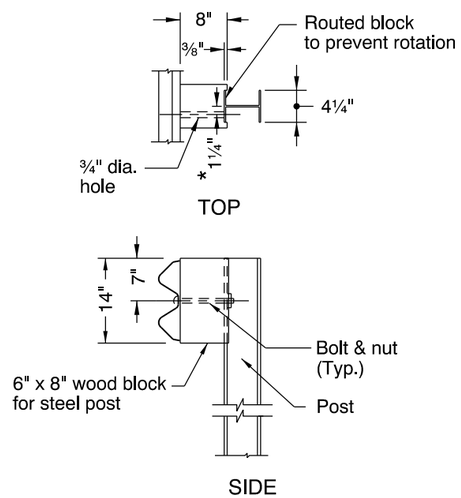

TYPE 2A, 3 OR METAL MEDIAN BARRIER
WOOD BLOCK FOR STEEL POST

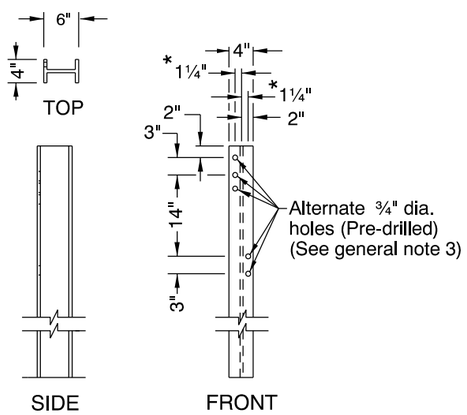

TYPE 4 OR TYPE 4 (TRANSITION) POST

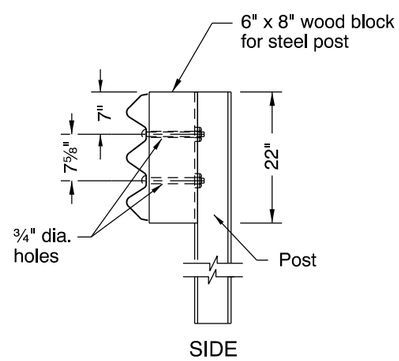

TYPE 4 OR TYPE 4 (TRANSITION) BLOCK
(Routing not required)

ⓐ Lowest hole(s) required only where channel rail is to be installed. Drill 12" below top ¾" hole(s) used. (See general note 4)

WOOD

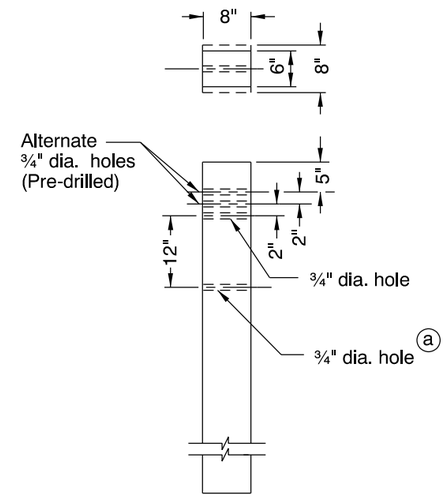

TYPE 1, 2A, 3 OR
METAL MEDIAN BARRIER

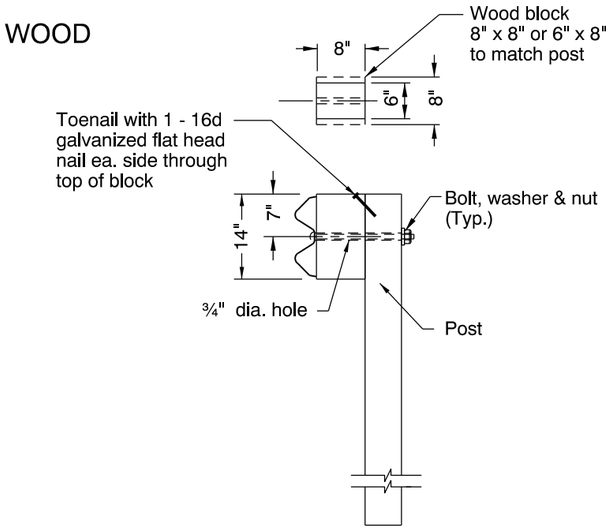

TYPE 2A, 3 OR
METAL MEDIAN BARRIER

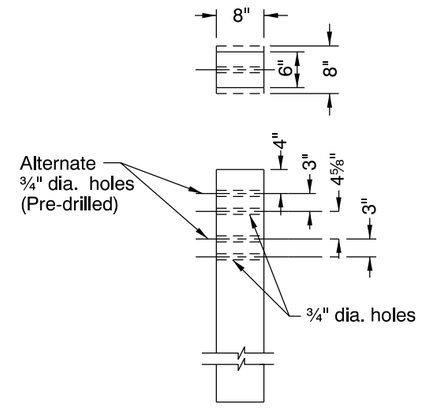

TYPE 4 OR TYPE 4 (TRANSITION)
POST

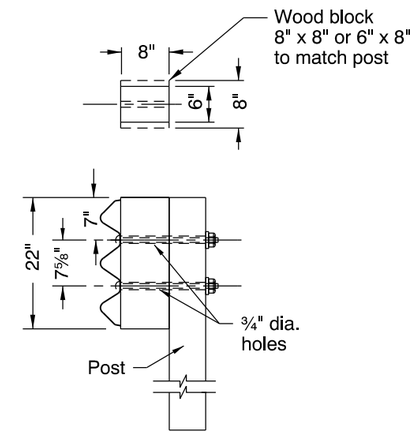

TYPE 4 OR TYPE 4 (TRANSITION) BLOCK

GUARDRAIL POST TABLE				
GUARDRAIL TYPE	POST SIZE		POST LENGTH	
	WOOD	STEEL *	WOOD	STEEL
1	6" x 8" or 8" x 8"	—	6'-0"	—
2A	6" x 8" or 8" x 8"	W6 x 9 or W6 x 8.5	6'-0"	6'-6" or 6'-0"
3	8" x 8"	W6 x 9 or W6 x 8.5	6'-0"	6'-6"
Metal median barrier	8" x 8"	W6 x 9 or W6 x 8.5	6' 6"	6'-6"
4	6" x 8" or 8" x 8"	W6 x 9 or W6 x 8.5	7'-0"	7'-0"
4 (Transition)	8" x 8"	W6 x 9 or W6 x 8.5	6'-0"	6'-9"

GENERAL NOTES FOR ALL DETAILS:

1. See Std. Drg. RD400 for alternate hole useage requirements.
2. For assembly, installation, and appurtenance details, see Std. Drgs. RD400, RD410, RD415, RD420, RD425, RD430, RD435, RD440.
3. See Bridge Drgs. for bridge transition guardrail post & block requirements. Multiple holes are not required in bridge transition rail posts.
4. Posts and blocks to be pre-drilled for the intended guardrail installation.
5. Post and block dimensions are nominal.
6. Steel posts are shifted to accomodate bolt holes.

The selection and use of this Standard Drawing, while designed in accordance with generally accepted engineering principles and practices, is the sole responsibility of the user and should not be used without consulting a Registered Professional Engineer.

CALC. BOOK NO. N/A

BASELINE REPORT DATE 21-JUL-2015

NOTE: All material and workmanship shall be in accordance with the current Oregon Standard Specifications

OREGON STANDARD DRAWINGS

GUARDRAIL AND METAL MEDIAN BARRIER PARTS

2015

DATE	REVISION DESCRIPTION
01-2015	ADDED & REVISED NOTES
07-2015	REVISED TABLE

rd405.dgn 21-JUL-2015

RD405

Effective Date: December 1, 2015 - May 31, 2016

RAIL MEMBERS

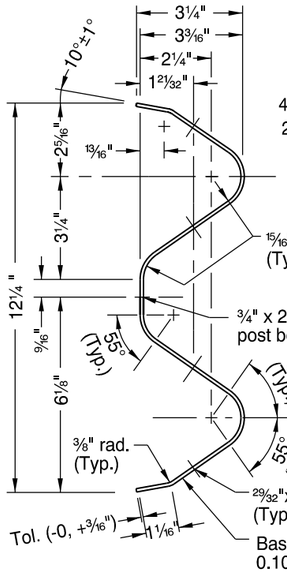

SECTION THRU RAIL ELEMENT

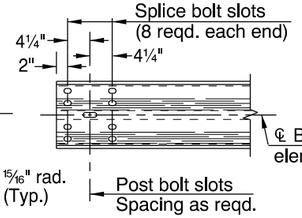

ELEVATION OF RAIL ELEMENT

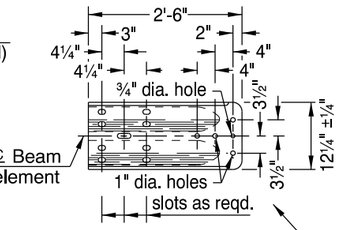

25.5° bend and hole reqd. only for use with alternate Type "C" end piece.

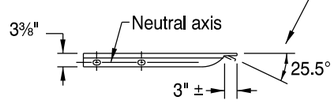

Base metal thickness 0.135" nominal (Before galv.)

TERMINAL CONNECTOR

APPURTENANCES

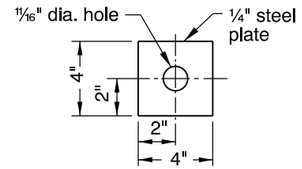

SNOW LOAD (OPTIONAL)
(In area of heavy snow, as directed by the engineer)

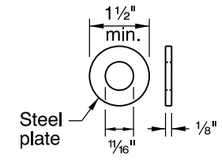

PLAIN ③

USE ON BACK OF POST

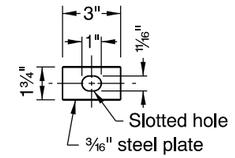

RECTANGULAR

USE ON RAIL ELEMENT FACE ON TYPE C END PIECE ④

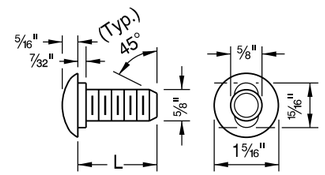

ALTERNATIVE No. 2

ALTERNATIVE No. 1

WASHERS

L (in.)	Thread Length (in.)
1¼	1⅛ min.
2	1¾ min.
10	4 min.
18	4 min.
25	4 min.

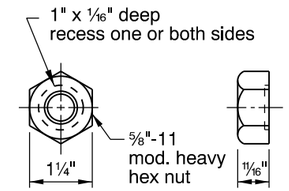

POST OR SPLICE BOLT AND NUT

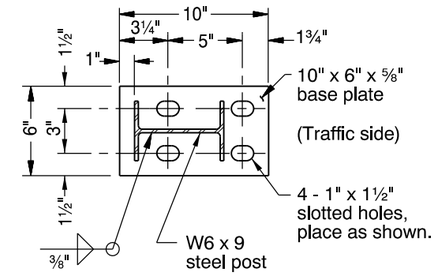

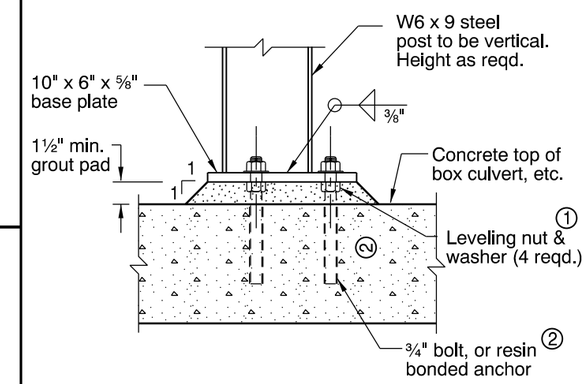

BASE PLATE DETAILS
(For additional details, see Std. Drg. BR266)
(Use when depth of cover is less than normal for post installation.)

NOTES:

1. For guardrail installed on radii of 150' or less (5' min. radius) use rail elements pre-curved to industry standard. Install "Radius Identification Plate" (See detail right).
2. Effective length of rail sections shall be 12'-6".

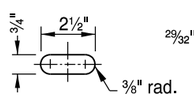

POST BOLT SLOT

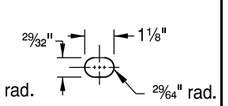

SPLICE BOLT SLOT

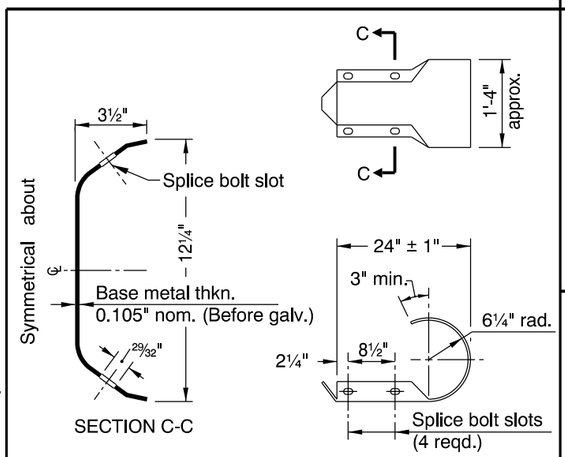

SECTION C-C

TYPE B END PIECE

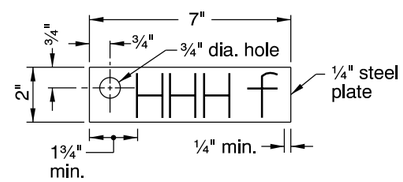

RADIUS IDENTIFICATION PLATE
(See general note 4)

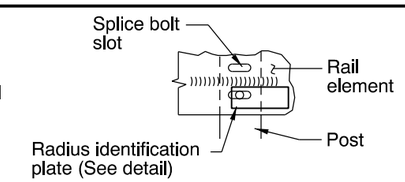

RADIUS IDENTIFICATION PLATE MOUNTING DETAIL
(See general note 5)

NOTES:

① Furnished & installed by structure contractor when shown on structure plans.

② 6" min. penetration into concrete slabs other than bridge decks. Cast in place or core and install using approved resin bonding system.

③ Not required if "Snow Load" washer option is used.

④ Use rectangular washer under bolt head and nut on Type C End Piece as shown.

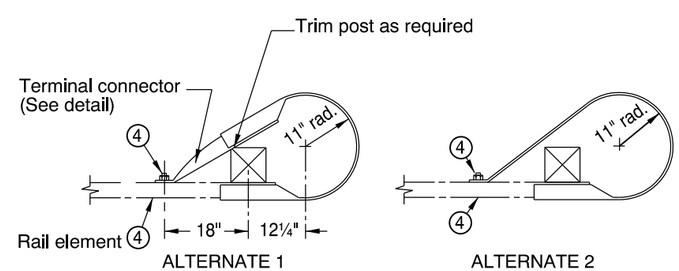

ALTERNATE 1 ALTERNATE 2

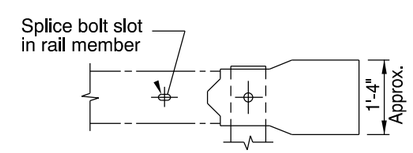

ELEVATION

TYPE C END PIECE
(For details not shown, see Type B End Piece)

GENERAL NOTES FOR ALL DETAILS:

1. For assembly and installation details, see Std. Drgs. RD400, RD405, RD420, RD425, RD430, RD435 & RD440.
2. For details of guardrail connections to structural handrails, see special details or Standard Drawings as called for on plans.
3. All indicated welds shall attain the full strength of the section welded.
4. Radius dimensions, in feet to the nearest 0.5 foot, shall be placed on the plate with a raised weld bead replacing the letters "HHH", shown on the Radius Identification Plate detail. Digits shall be 1½" min. height and ¾" max. width. Plate shall be galvanized after placement of digits.
5. The guardrail radius identification plate is to be mounted on the back side of the rail element with the lowest splice bolt nearest the P.C. of the guardrail radius.

CALC. BOOK NO. N/A

BASELINE REPORT DATE 12-JAN-2015

NOTE: All material and workmanship shall be in accordance with the current Oregon Standard Specifications

The selection and use of this Standard Drawing, while designed in accordance with generally accepted engineering principles and practices, is the sole responsibility of the user and should not be used without consulting a Registered Professional Engineer.

OREGON STANDARD DRAWINGS

GUARDRAIL AND METAL MEDIAN BARRIER PARTS

2015

DATE	REVISION DESCRIPTION
01-2015	REVISED DETAILS & NOTES

Effective Date: December 1, 2015 - May 31, 2016

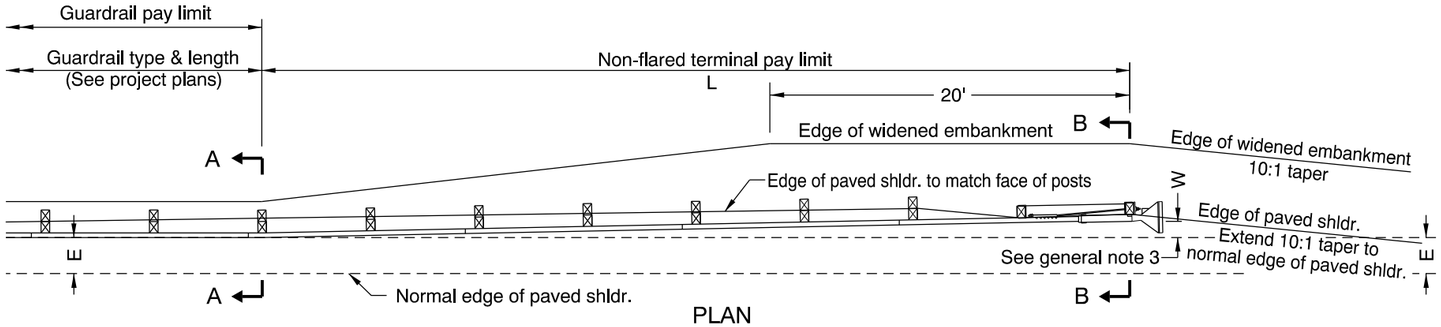

PLAN

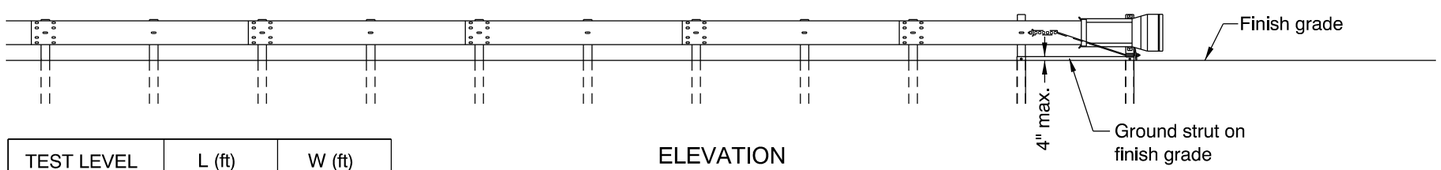

ELEVATION

TEST LEVEL	L (ft)	W (ft)
2 (≤ 45 mph)	25	1 to 2 **
3 (> 45 mph)	37.5 or 50	1 to 2 **

** See general note 3

NON-FLARED OPTION

NOTES:
1. E=2', where shown on plans.
2. Drainage curb alignment same as face of guardrail. Modify alignment to match face of posts at terminal ends only, as shown.

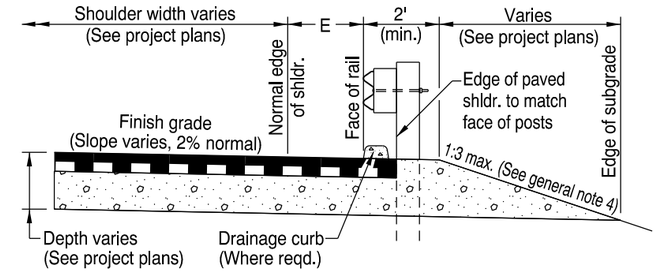

SECTION A-A

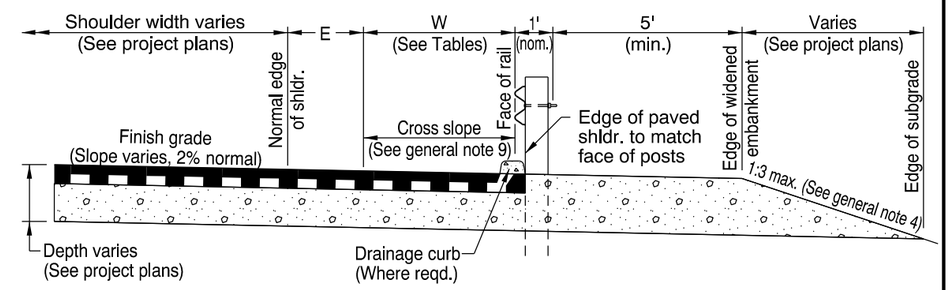

SECTION B-B

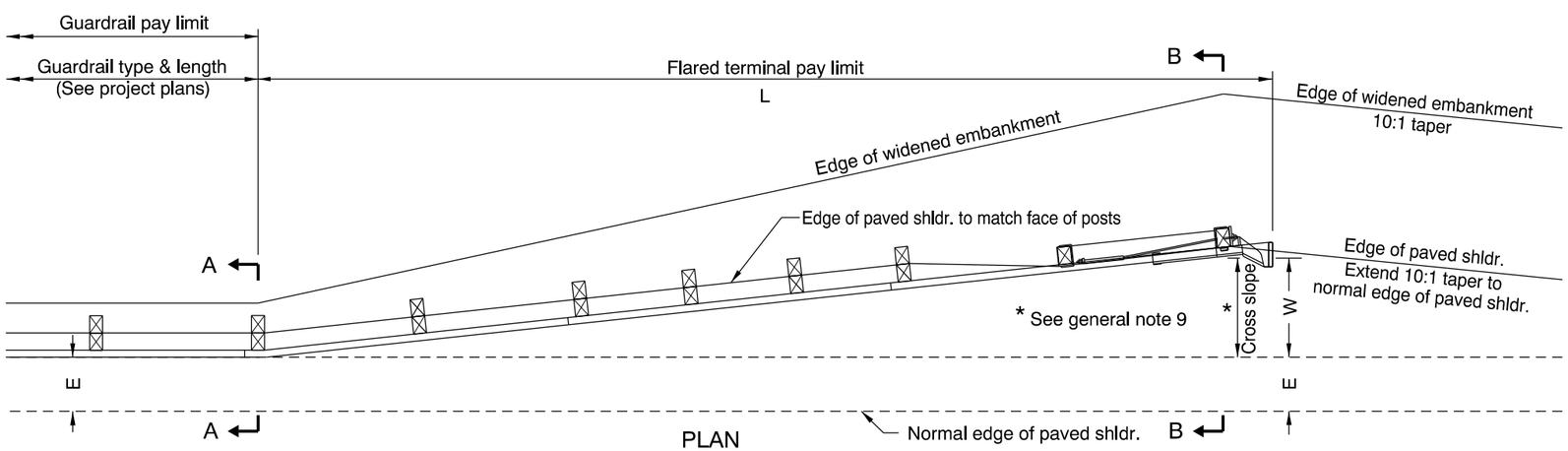

PLAN

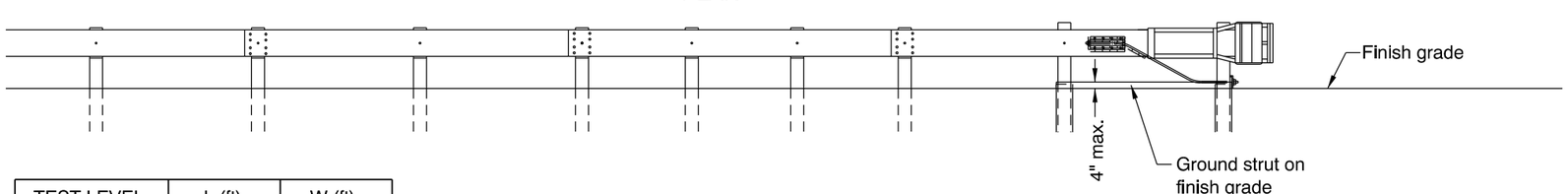

TEST LEVEL	L (ft)	W (ft)
2 (≤ 45 mph)	25	1.67 to 2.67
3 (> 45 mph)	37.5	2.5 to 4.0

ELEVATION
STRAIGHT FLARE OPTION
(Flare rate varies, see table)

GENERAL NOTES FOR ALL DETAILS:

1. For details not shown, see Std. Drgs. RD400, RD405, RD410, RD415 & RD435.
2. On two way two lane highways, both ends of guardrail runs shall be provided with a terminal flared or non-flared. Paving of widened shldr. to the face of posts on both ends of guardrail runs is required.
3. Non-flared terminal shall be installed with a min. 1 foot offset ensuring that the end piece is entirely off normal shldr.
4. 1:4 slope or flatter preferable, 1:3 max.
5. Provide terminal from ODOT's QPL. Install according to manufacturer's recommendations (post count varies). Provide shop drawings to Engineer.
6. Install fixed object marker on head of every terminal with "W" 4 feet or less.
7. "W" distance is measured to face of guardrail at end post, exclusive of end piece.
8. See Std. Drg. RD701 for drainage curbs, where required.
9. Cross slope to match adjacent roadway cross slope (preferred).
   If required, maximum shoulder slope 10% for guardrail widening.
   If required, maximum grade break at normal edge of shoulder 8%.
10. See project plans for details not shown.

CALC. BOOK NO. N/A

BASELINE REPORT DATE 21-JUL-2015

NOTE: All material and workmanship shall be in accordance with the current Oregon Standard Specifications

The selection and use of this Standard Drawing, while designed in accordance with generally accepted engineering principles and practices, is the sole responsibility of the user and should not be used without consulting a Registered Professional Engineer.

OREGON STANDARD DRAWINGS

ENERGY-ABSORBING TERMINAL

2015

DATE	REVISION DESCRIPTION
01-2015	REVISED DETAILS & NOTES
07-2015	REVISED DETAILS & NOTES

rd420.dgn 21-JUL-2015

RD420

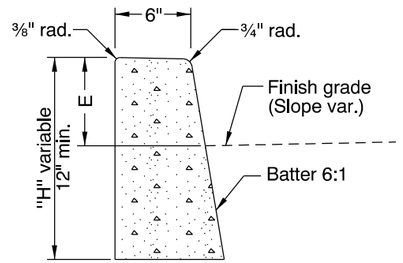

O.D.O.T. & City of Portland Standard "H"=16"
STANDARD CURB

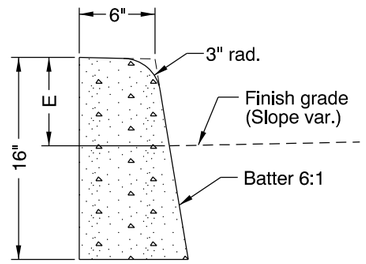

MOUNTABLE CURB

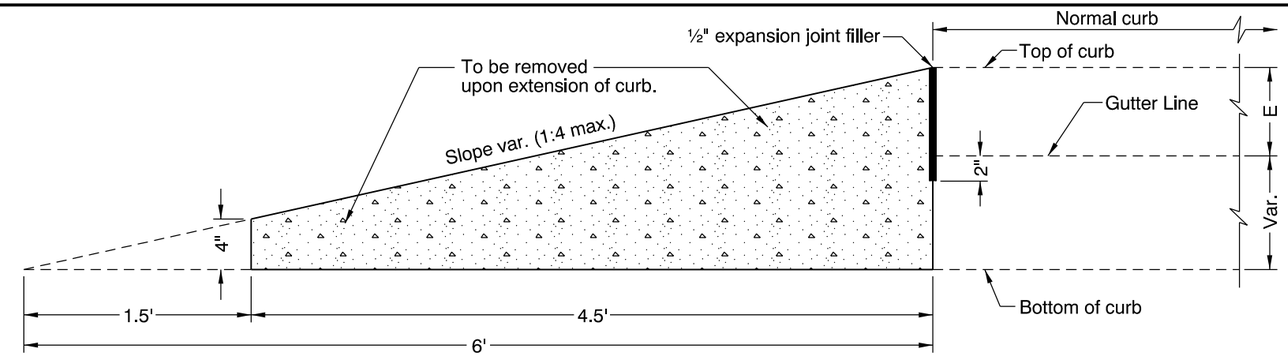

CURB ENDING DETAIL

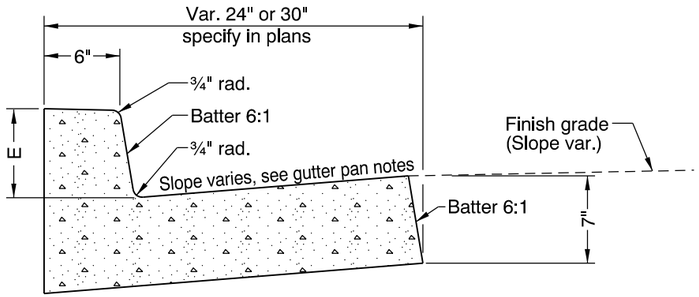

CURB AND GUTTER

GUTTER PAN NOTES:
Slope 8% normal.
Use 5% slope for gutter width greater than 24".
Slope 4% at ramps. Vary slope as reqd. for drainage.
Vary where shown on plans, and allowed by jurisdiction.

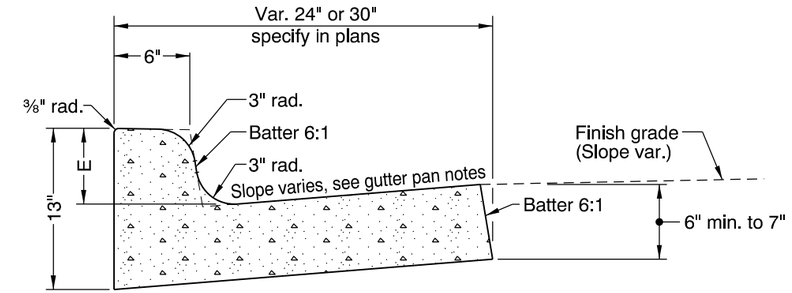

MOUNTABLE CURB AND GUTTER

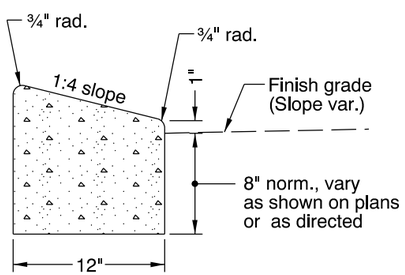

LOW PROFILE
MOUNTABLE CURB

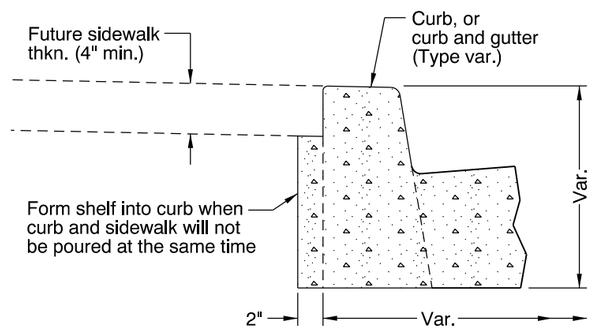

MODIFICATION FOR KEYWAY
(Where shown on plans)

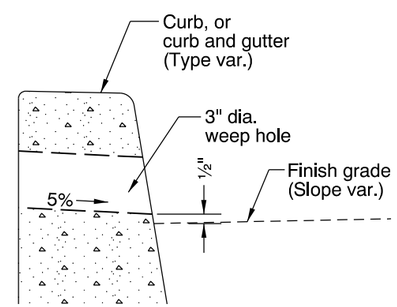

WEEP HOLE DETAIL
(Where shown on plans, and allowed by jurisdiction)

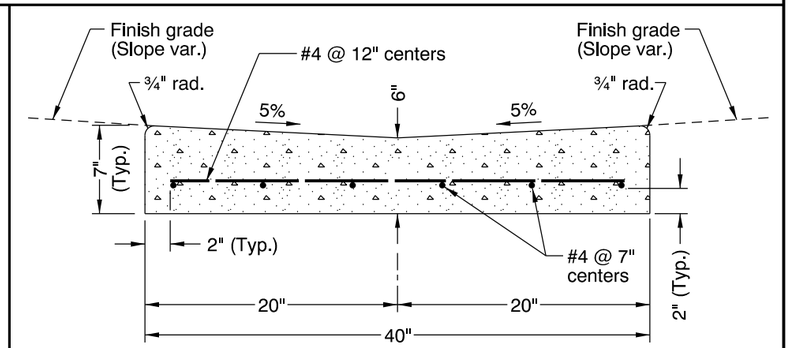

VALLEY GUTTER

CALC. BOOK NO. N/A

BASELINE REPORT DATE 21-JUL-2015

GENERAL NOTES FOR ALL DETAILS:

1. Curb exposure "E" = 6" to 9", as measured vertically from flowline to highest point on curb. Vary as shown on plans or as directed. O.D.O.T standard "E"=7".
2. Const. expansion joints at 200' maximum spacing, and at points of tangency, and at ends of each driveways.
3. Const. contraction joints at 15' maximum spacing, and at ends of each inlet and ramp.
4. Transitions shall be used to connect curbs of different exposures "E". ("E" Is the total vertical dimension of those curb surfaces having a slope of 1:1 or steeper). Minimum desirable transition length shall be 20' for each 1" difference in "E".
5. Tops of all curbs shall slope toward the roadway at 1.5% design (2% max. construction), unless otherwise shown, or as directed.
6. Dimensions are nominal, vary to conform with curb machine approved by the engineer.
7. Dimensions adjacent to radii are measured to the point of intersection of curb surfaces.
8. For sidewalk details, and monolithic curb & sidewalk, see Std. Drg. RD720.
9. For drainage curbs, see Std. Drg. RD701.
10. For sidewalk ramp details, see Std. Drg. RD755.

The selection and use of this Standard Drawing, while designed in accordance with generally accepted engineering principles and practices, is the sole responsibility of the user and should not be used without consulting a Registered Professional Engineer.

NOTE: All material and workmanship shall be in accordance with the current Oregon Standard Specifications

OREGON STANDARD DRAWINGS

CURBS

2015

DATE	REVISION DESCRIPTION
01-2015	ADDED NOTE
07-2015	REVISED NOTE

rd700.dgn 21-JUL-2015

RD700

Effective Date: December 1, 2015 - May 31, 2016

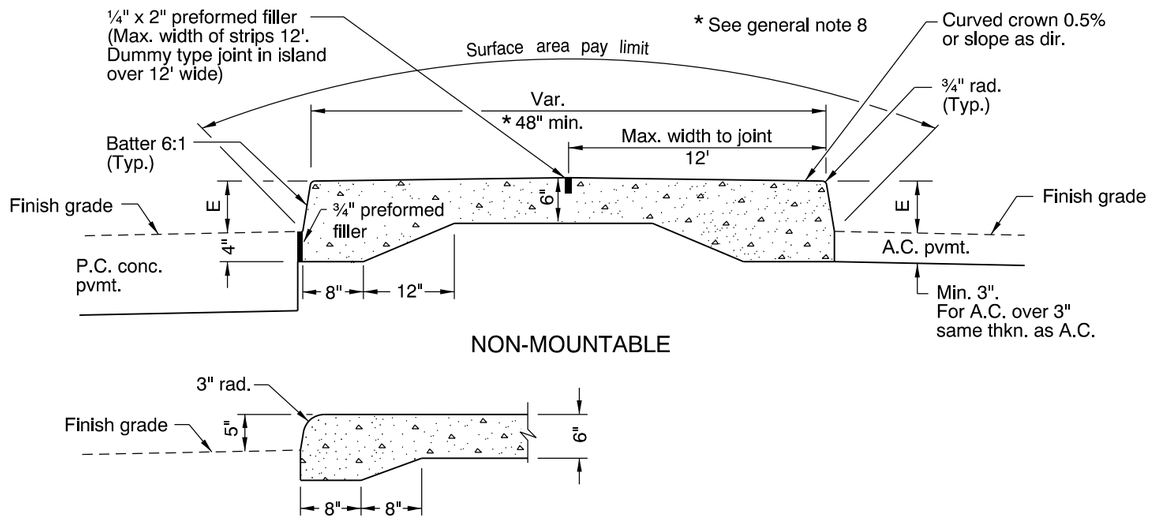

MOUNTABLE
(For surfacing details not shown, see above)

TYPE A

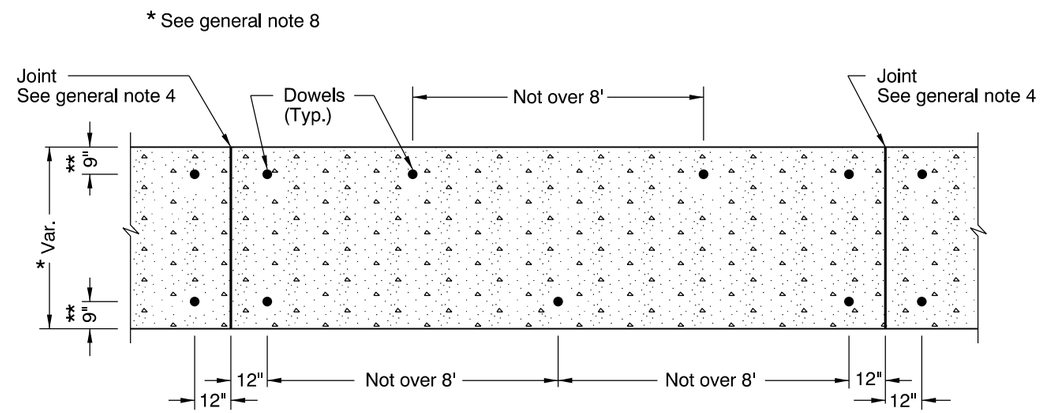

DOWEL PLAN
FOR TYPE C OR TYPE CA ISLANDS & TRANSITIONS
(ON SURFACE OF NEW OR EXISTING PAVEMENT)

**Also see below for type CA island requirement.

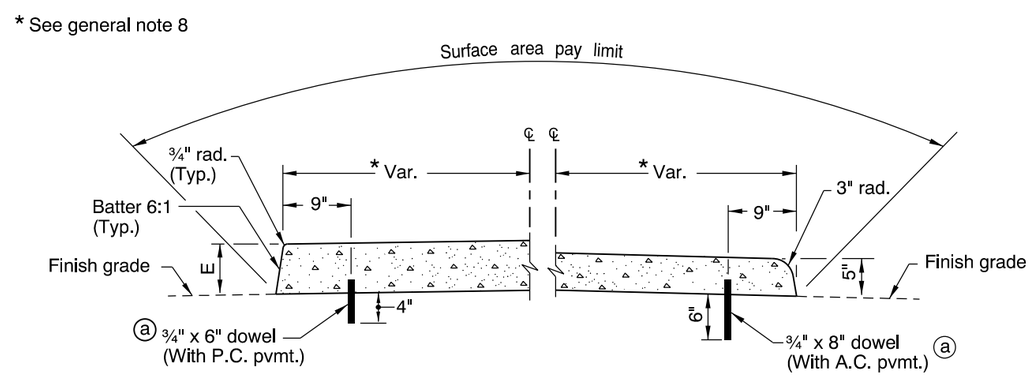

NON-MOUNTABLE MOUNTABLE

ⓐ No dowels reqd. for Type C islands 5' wide or wider

TYPE C

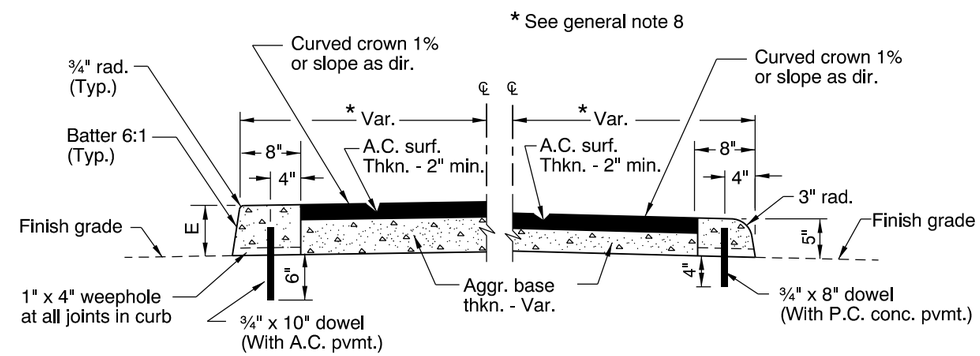

NON-MOUNTABLE MOUNTABLE

TYPE CA

CALC. BOOK NO. N/A

BASELINE REPORT DATE 05-NOV-2009

NOTE: All material and workmanship shall be in accordance with the current Oregon Standard Specifications

GENERAL NOTES FOR ALL DETAILS:

1. Curb exposure "E" = 7" normal. Vary as shown on plans or as directed.
2. Standard batter is shown. Vary as shown on typical section or as directed.
3. Transverse joints in conc. islands to match joints in conc. pvmt. and to be of same type (Omit dowels in expansion joints).
4. Set joint spacing 200' max. for expansion and 15' max. for contraction.
5. Place preformed filler along one side of conc. islands in conc. pvmt. and around all curved ends.
6. Dowels shall be ¾" dia. with length as shown.
   In new conc. pvmt. set dowels before conc. hardens.
   In extg. conc. pvmt. drill holes 1½" dia. and grout dowels in.
   In A.C. pvmt. drive dowels.
7. For transitions to traffic separators, see Std. Drg. RD706.
8. Minimum island width is 48". For accessible route islands, see Std. Drg. RD710.

The selection and use of this Standard Drawing, while designed in accordance with generally accepted engineering principles and practices, is the sole responsibility of the user and should not be used without consulting a Registered Professional Engineer.

OREGON STANDARD DRAWINGS

ISLANDS

2015

DATE	REVISION DESCRIPTION

rd705.dgn 14-JUL-2014

RD705

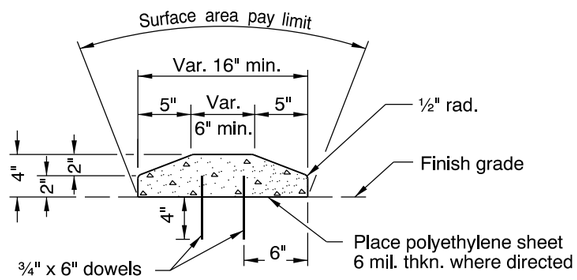

SECTION B-B

TYPE A

TRAFFIC SEPARATOR ON P.C. CONC. PVMT.

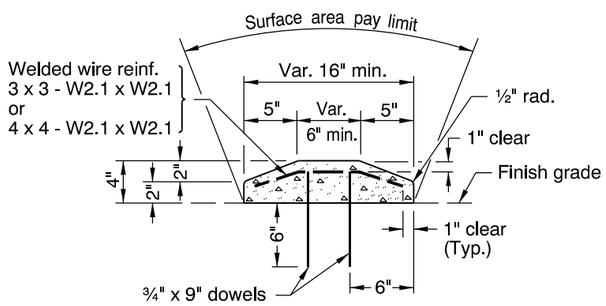

SECTION B-B

TYPE B

TRAFFIC SEPARATOR ON EXTG. A.C. PVMT.

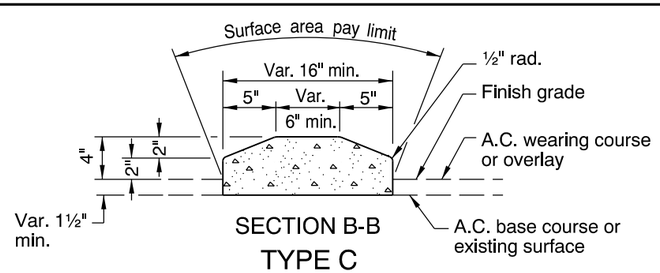

SECTION B-B

TYPE C

TRAFFIC SEPARATOR ON NEW A.C. PVMT.
OR ON EXISTING A.C. PVMT. WITH OVERLAY

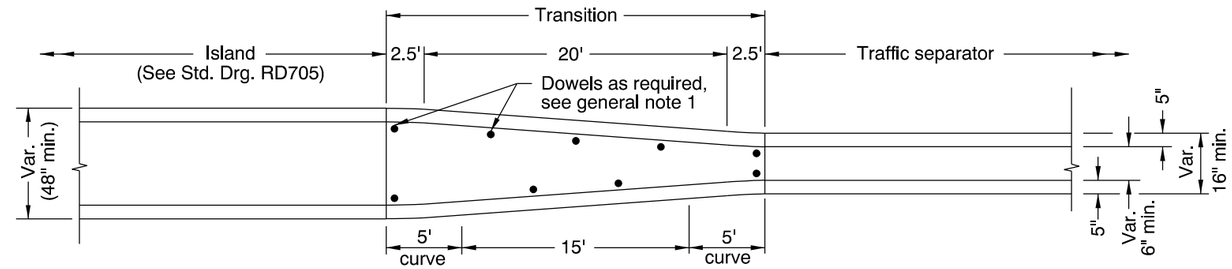

PLAN

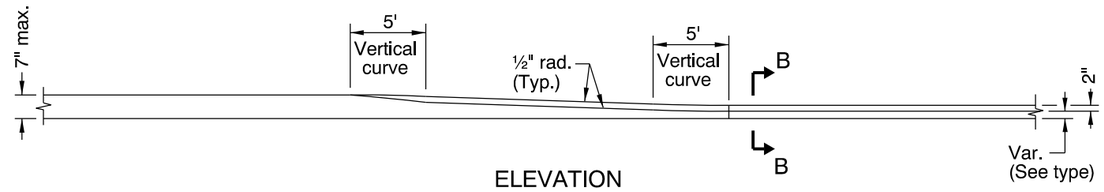

ELEVATION

TRANSITION FROM ISLAND TO TRAFFIC SEPARATOR

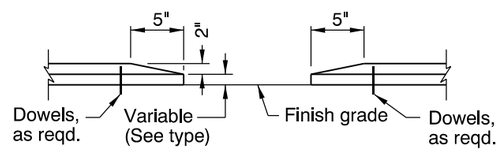

SECTION A-A

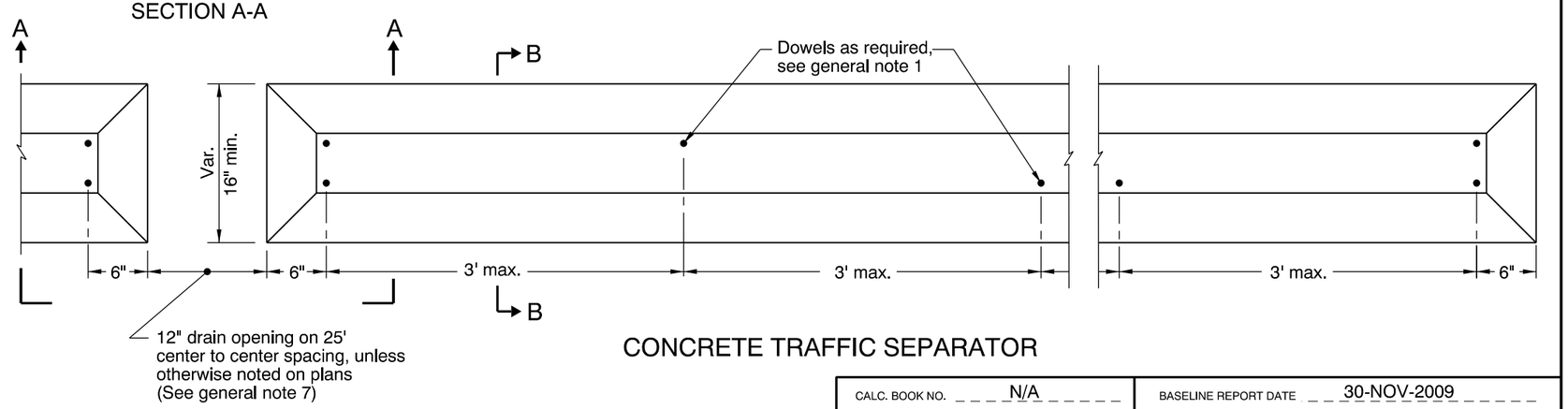

CONCRETE TRAFFIC SEPARATOR

GENERAL NOTES FOR ALL DETAILS:

1. In transitions conform to dowel plan per Std. Drg. RD705.
2. Standard slope face is shown. Vary as shown on typical section or as directed.
3. Transverse joints in conc. traffic separators and transitions to match joints in conc. pvmt. and to be of same type (Omit dowels in expansion joints).
4. Set joint spacing 200' max. for expansion and 15' max. for contraction.
5. Place preformed filler along one side of conc. transitions in conc. pvmt. and around all curved ends.
6. Dowels shall be ¾" dia. with length as shown. In new conc. pvmt. set dowels before conc. hardens. In extg. conc. pvmt. drill holes 1½" dia. and grout dowels in. In A.C. pvmt. drive dowels.
7. Site conditions normally require a project specific drain opening spacing design, which considers roadway conditions (sheet flow limits, cross slope, superelevation, profile, pavement type, lane and shoulder widths, etc.).

CALC. BOOK NO. N/A

BASELINE REPORT DATE 30-NOV-2009

NOTE: All material and workmanship shall be in accordance with the current Oregon Standard Specifications

The selection and use of this Standard Drawing, while designed in accordance with generally accepted engineering principles and practices, is the sole responsibility of the user and should not be used without consulting a Registered Professional Engineer.

OREGON STANDARD DRAWINGS

TRAFFIC SEPARATORS AND TRANSITIONS

2015

DATE	REVISION DESCRIPTION

rd706.dgn 14-JUL-2014

RD706

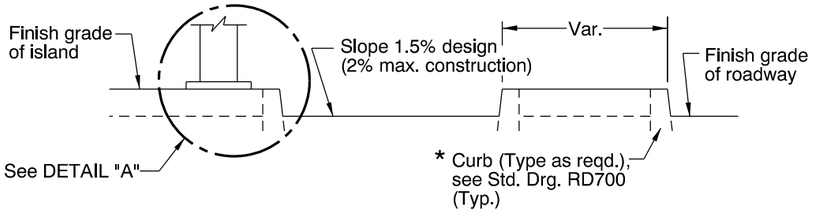

SECTION A-A

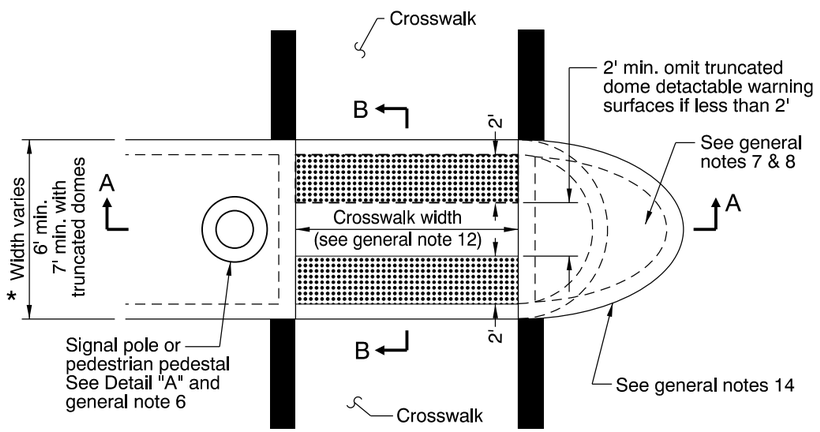

PLAN VIEW

* See general note 13

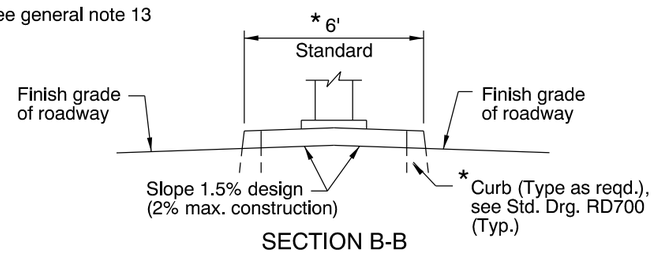

SECTION B-B
RAISED MEDIAN ISLAND DETAIL

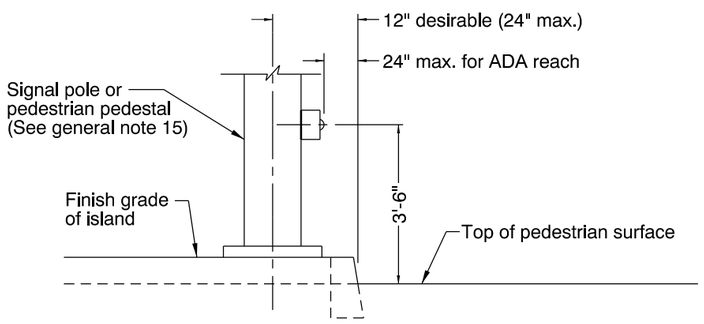

DETAIL "A"
(See general note 6)

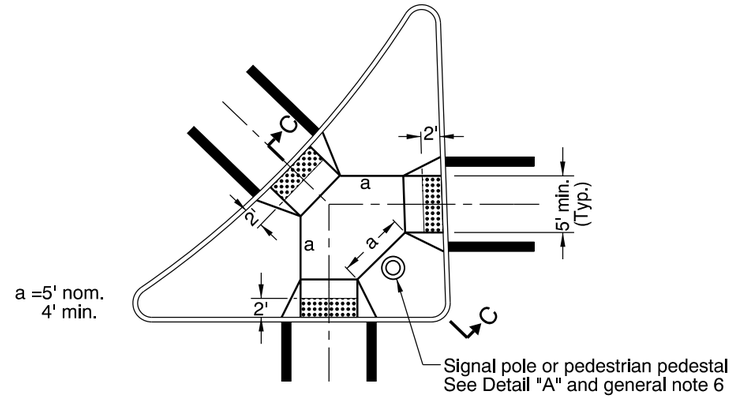

PLAN VIEW

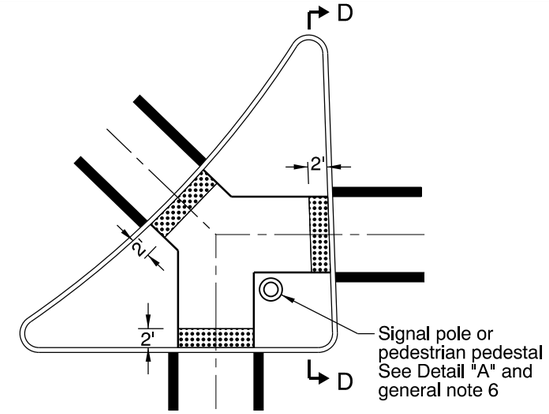

PLAN VIEW

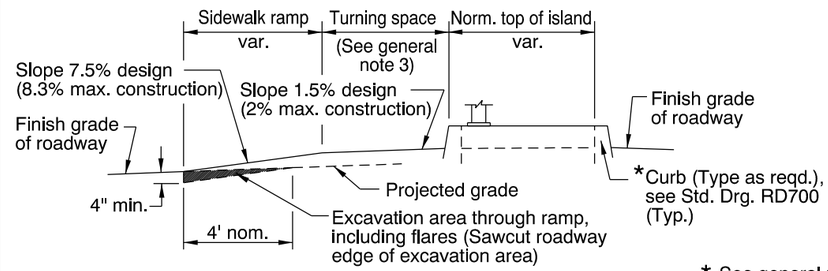

SECTION C-C
LOWERED ISLAND DETAIL

* See general note 13

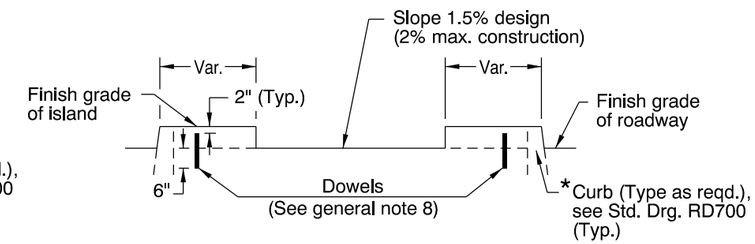

SECTION D-D
CUT THROUGH ISLAND DETAIL

RAISED RIGHT TURN CHANNELIZATION ISLAND

GENERAL NOTES FOR ALL DETAILS:

1. Accessible route islands are based on United States Access Board Standards.
2. Place truncated dome detectable warning surface in the lower 2' adjacent to traffic of throat of ramp only. For details not shown, see Std. Drg. RD759.
3. For lowered island, lower grade of island interior as reqd. to accomplish a min. 5'x5' turning space in center of island.
4. Locate poles, pedestals, etc. so that a min. 5' x 5' clear space is available in the turning space.
5. Turning space, in lowered island, shall have a slope of 1.5% design (2% max. construction).
6. Locate pedestrian pushbuttons, etc., so they are accessible from turning space or cut through area (See Detail "A").
7. The min. area of islands that contain signal poles, pedestals, etc., shall be 75 sq. ft. Square feet to be measured to outer perimiter of entire island.
8. For cut through islands dowel each island segment to the pvmt. with a min. of 2, ¾" dia. dowels. Dowel the nose section of the raised median island with a minimum of 2, ¾" dia. dowels. Place dowels as directed.
9. Align ramps for lowered island and cut through island with the crosswalk.
10. See Std. Drgs. RD700, RD701, RD705, RD706 & RD755 for additional details.
11. See Std. Drg. RD705 for expansion and contraction joint spacing.
12. See Std. Drgs. TM503 & TM530 for crosswalk markings, widths, etc.
13. Curb type and median width as shown on plans or as directed. Type A or Type C islands are acceptable alternates, see Std. Drg. RD705.
14. For island nose treament, see Std. Drg. RD707.
15. See Traffic Standard Drawings for signal pole and pedestrian pedestal details.
16. See project plans for details not shown.

Truncated dome detectable warning surface

CALC. BOOK NO. N/A

BASELINE REPORT DATE 21-JUL-2015

NOTE: All material and workmanship shall be in accordance with the current Oregon Standard Specifications

The selection and use of this Standard Drawing, while designed in accordance with generally accepted engineering principles and practices, is the sole responsibility of the user and should not be used without consulting a Registered Professional Engineer.

OREGON STANDARD DRAWINGS

ACCESSIBLE ROUTE ISLANDS

2015

DATE	REVISION DESCRIPTION
01-2015	REVISED DETAILS & NOTES
07-2015	REVISED & ADDED NOTES

rd710.dgn 21-JUL-2015

RD710

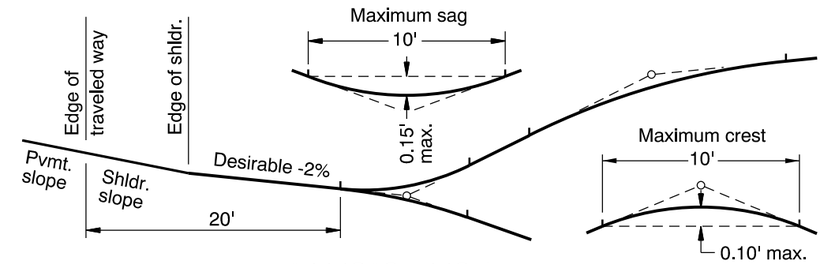

APPROACH PROFILE

NOTE:
When grades on approaches meet without vertical curves the maximum algebraic difference on crests should be 8% and on sags 12%. Grades steeper than 15% should not be used without prior approval of the engineer of record. Any driveways with slopes exceeding 12% shall be paved.

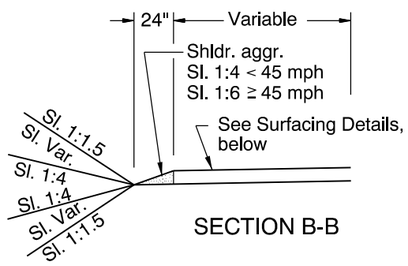

SECTION B-B

R= { 30' normal (Major constr.)
20' normal (Minor constr.)

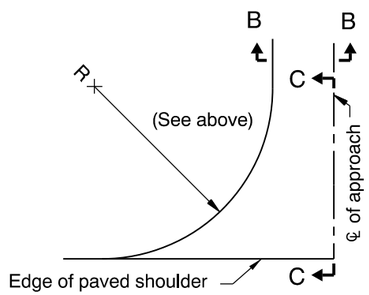

HALF PLAN

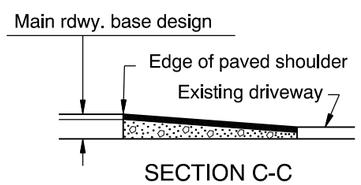

SECTION C-C

NOTE:
Normal paving limits to extend 20' (30' for public road connections) from the edge of pavement or to the right of way line, whichever is less. Approach surfacing and width to then match existing approach.

APPROACH

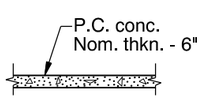

P.C. CONCRETE SURFACING

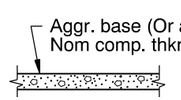

GRAVEL SURFACING

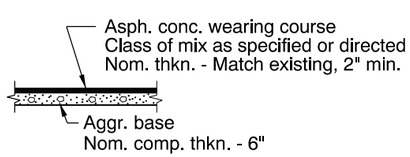

ASPHALT CONCRETE SURFACING

APPROACH AND DRIVEWAY CONNECTION SURFACING DETAILS

TYPE A
PORTLAND CEMENT CONCRETE

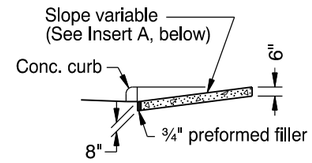

SECTION D-D

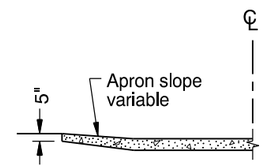

SECTION E-E

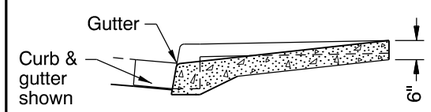

SECTION A-A
FOR MONOLITHIC DRIVEWAYS

TYPE A-1
ASPHALT CONCRETE

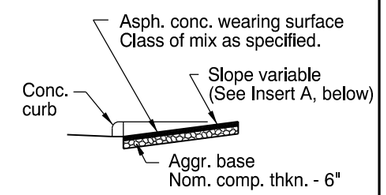

SECTION D-D

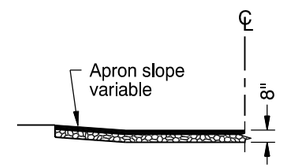

SECTION E-E

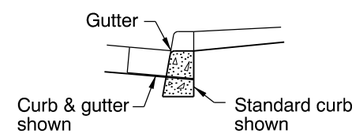

SECTION A-A
FOR DRIVEWAYS

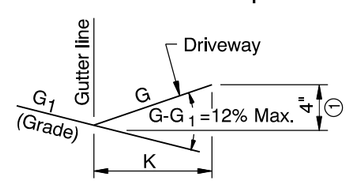

INSERT A

① Minimum allowable for drainage control on negatively sloped driveways.

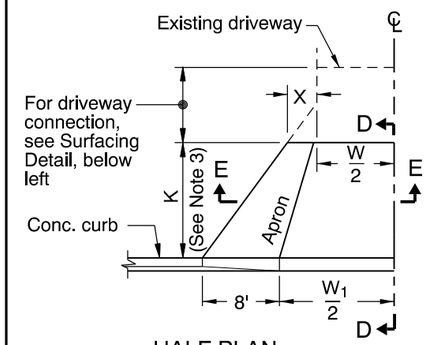

HALF PLAN

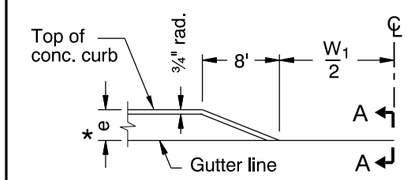

HALF ELEVATION

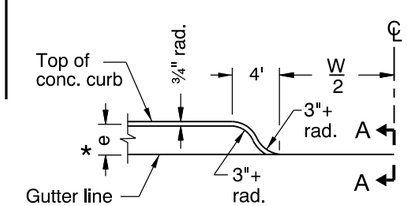

HALF ELEVATION
(ALTERNATE APRON SLOPE)
(See General Note 5)

* Curb exposure "e" = 7" normal.
Vary as shown on plans or as directed.

TABLE A

W (ft)	X (ft)	K (ft) 5	6	8	10
		W1 (ft)			
12	3	15	15	15	15
14		17	17	17	17
16		19	19	19	19
18		21	21	21	21
20		23	23	23	23
22	4	27	28	29	30
24		29	30	31	32
26		31	32	33	34
28		33	34	35	36
30		35	36	37	38
32	5	41	42	44	46
34		43	44	46	48
36		45	46	48	50

Where a travel lane is constructed adjacent to the curb line, use 16' W min. for residence and 30' W min. for light commercial, add 5' to W1 for both. Do not add the 5' to W1 when 4' min. shldr. or bikeway is included in the typical.

NON-SIDEWALK DRIVEWAYS
NOTE: See "Table A" for dimensions not shown.

GENERAL NOTES FOR ALL DETAILS:
1. Driveway details shown on this drawing are to be used on roadways where there are no existing or planned sidewalks in driveway vicinity. For driveways located in a sidewalk see Std. Drgs. RD720, RD725 and/or RD730, RD735, RD740, RD745, RD750.
2. Width of driveway (W) as shown on plans or as directed.
3. K is the distance from back of curb to back of driveway (10' max.).
4. Where existing driveway is in good condition, construct only as much as required for satisfactory connection with new work.
5. "Alternate Apron Slope" used only where plans designate. Alternate Apron Slope may also be used at local jurisdiction's request when approved by the Project Manager.
6. Increase thickness of asphalt concrete and stone base where shown on plans.
7. For curb details, see Std. Drgs. RD700 & RD701.
8. For expansion and contraction joint requirements, see applicable curb and sidewalk standard drawings.

CALC. BOOK NO. N/A

BASELINE REPORT DATE 14-JUL-2014

NOTE: All material and workmanship shall be in accordance with the current Oregon Standard Specifications

The selection and use of this Standard Drawing, while designed in accordance with generally accepted engineering principles and practices, is the sole responsibility of the user and should not be used without consulting a Registered Professional Engineer.

OREGON STANDARD DRAWINGS

APPROACHES AND NON-SIDEWALK DRIVEWAYS

2015

DATE	REVISION DESCRIPTION

rd715.dgn 14-JUL-2014

RD715

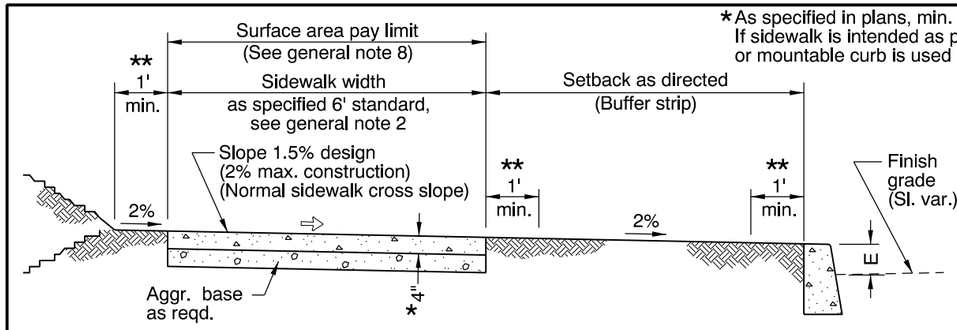

TYPICAL SETBACK SIDEWALK CROSS SECTION
E = curb exposure, see general note 6

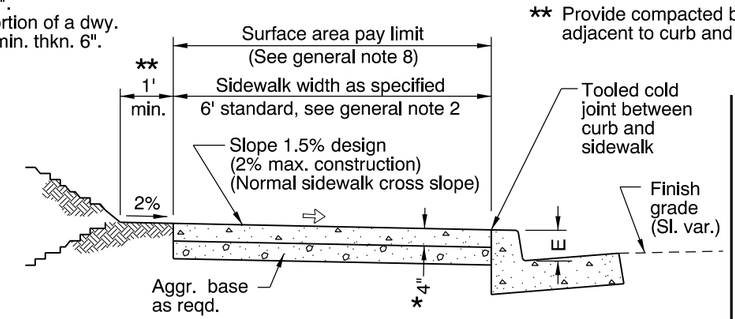

TYPICAL CURB SIDEWALK CROSS SECTION
E = curb exposure, see general note 6

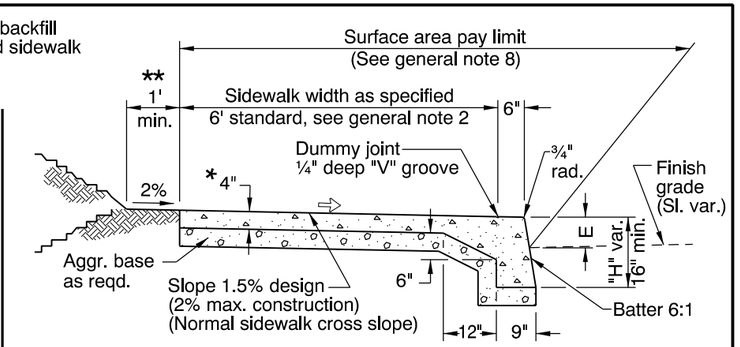

TYPICAL MONOLITHIC CURB & SIDEWALK
E = curb exposure, see general note 6

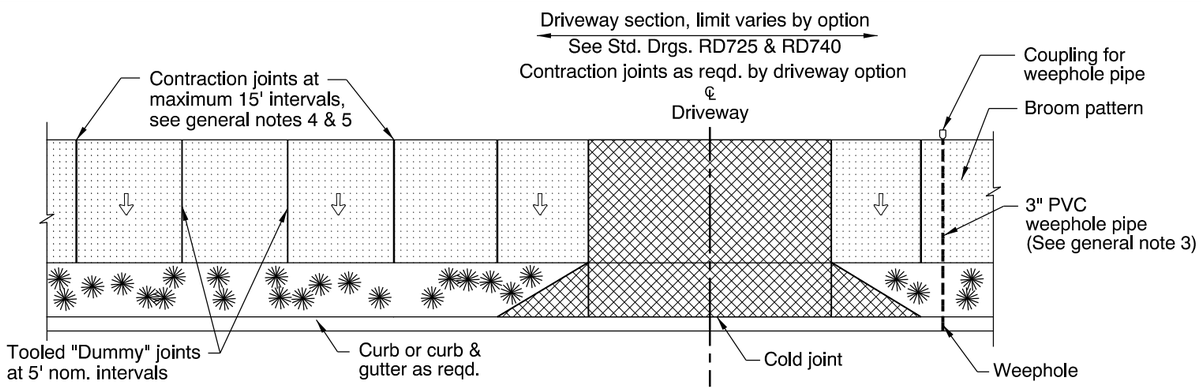

TYPICAL PLAN VIEW - SEPARATED SIDEWALK

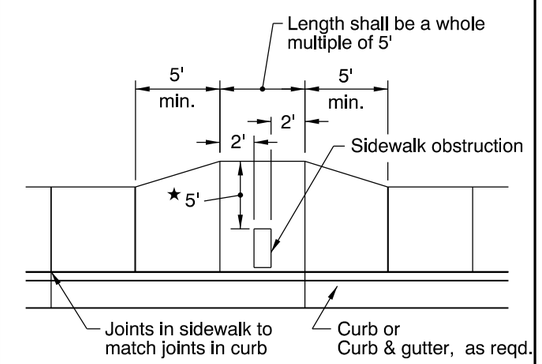

★ When site constraints prohibit a 5' passage, the Engineer may direct this to be reduced, but no less than 4'.

REQUIRED SIDEWALK WIDENING AROUND OBSTRUCTIONS

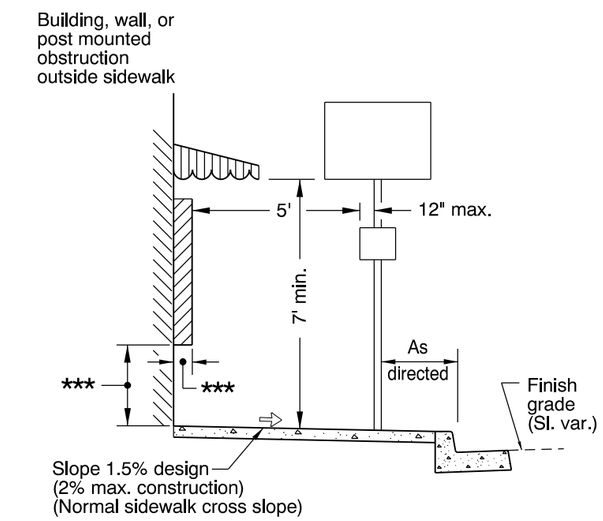

*** Objects with base below 2'-4" may protrude any distance as long as the 5' circulation path is maintained. When an object with a base higher than 2'-4" protrudes further than 4" provide a curb below protrusion to delineate edge.

CLEAR CIRCULATION PATH

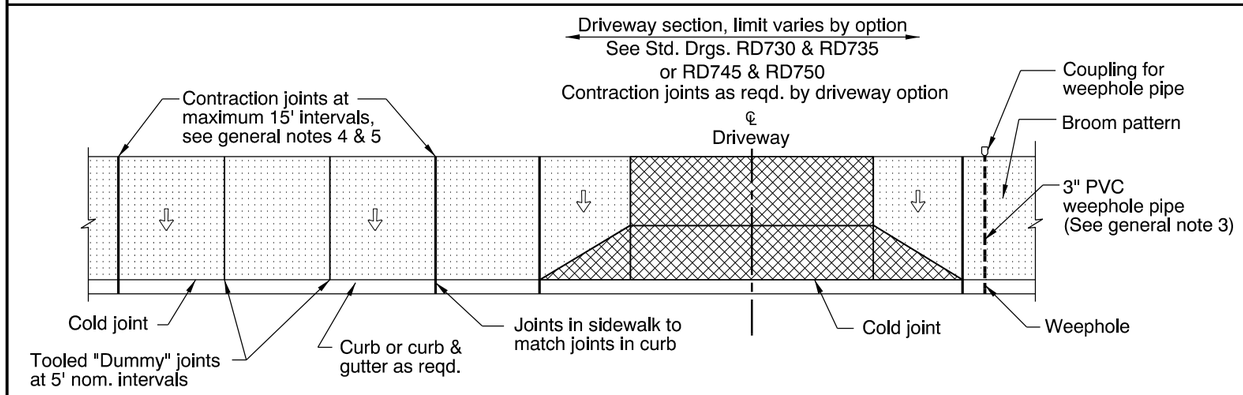

TYPICAL PLAN VIEW - CURB LINE SIDEWALK

Sidewalk

General configuration of driveway pay limit (See general note 8), varies by option.

Slope 1.5% design
(2% max. construction)
(Normal sidewalk cross slope)

GENERAL NOTES FOR ALL DETAILS:

1. Include additional paved or unpaved 2' clearance to vertical faces higher than 5' such as retaining walls, sound walls, fences and buildings.
2. Curb type and sidewalk width as shown on plans or as directed. On sidewalks 8' and wider, provide a longitudinal joint at the midpoint.
3. Install 3" pvc weephole pipes in sidewalks where shown on plans, and allowed by jurisdiction. Place contraction joint over top of pipe.
4. Const. expansion joints at 200' maximum spacing, and at points of tangency, and at ends of each driveway. For monolithic curb & sidewalk, const. expansion joints at 45' maximum spacing.
5. Const. contraction joints at 15' maximum spacing, and at ends of each driveway and ramp.
6. For curb details, see Std. Drgs. RD700 & RD701.
7. Sidewalk details are based on United States Access Board Standards.
8. For driveway details not shown, see Std. Drgs. RD725, RD730, RD735, RD740, RD745 & RD750.
9. See project plans for details not shown.

CALC. BOOK NO. N/A

BASELINE REPORT DATE 21-JUL-2015

NOTE: All material and workmanship shall be in accordance with the current Oregon Standard Specifications

The selection and use of this Standard Drawing, while designed in accordance with generally accepted engineering principles and practices, is the sole responsibility of the user and should not be used without consulting a Registered Professional Engineer.

OREGON STANDARD DRAWINGS

SIDEWALKS

2015

DATE	REVISION DESCRIPTION
01-2015	REVISED DETAILS & ADDED NOTES
07-2015	REVISED NOTES

rd720.dgn 21-JUL-2015

RD720

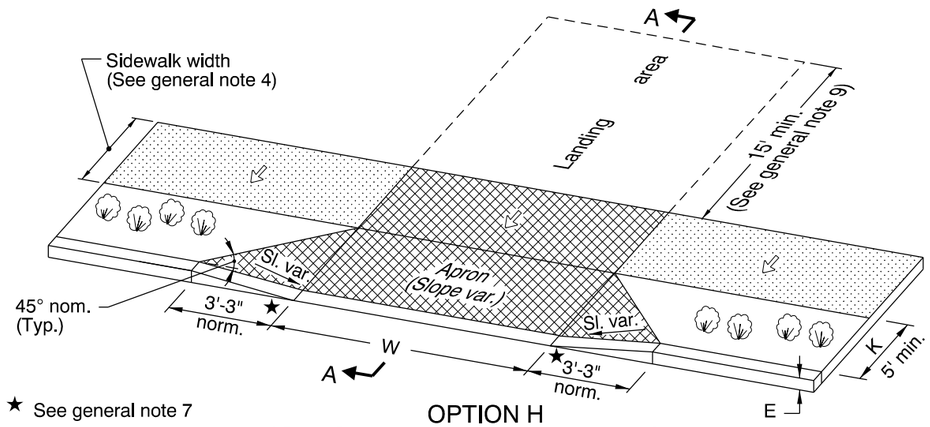

OPTION H
TYPICAL SEPARATED SIDEWALK DRIVEWAY
(Use one of the options below if slope requirements shown in Section A-A cannot be met)

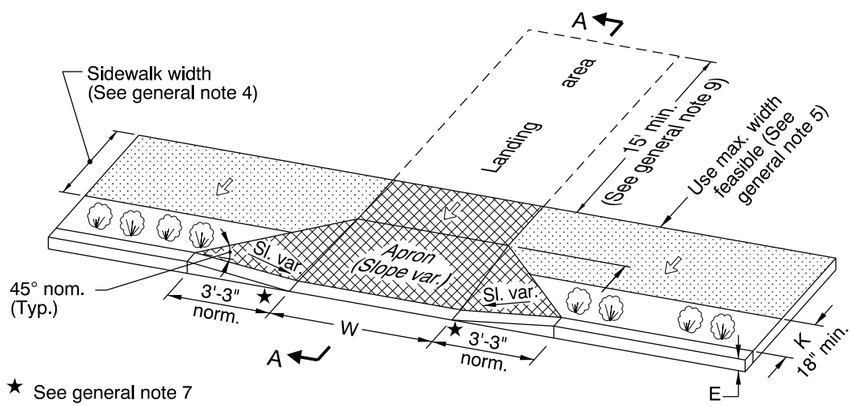

OPTION I
DRIVEWAY ENCROACHES INTO SIDEWALK

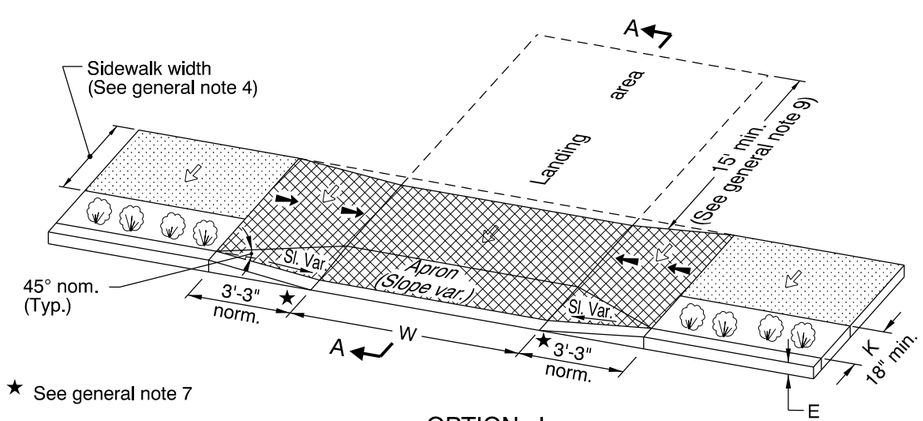

OPTION J
LOWERED SIDEWALK

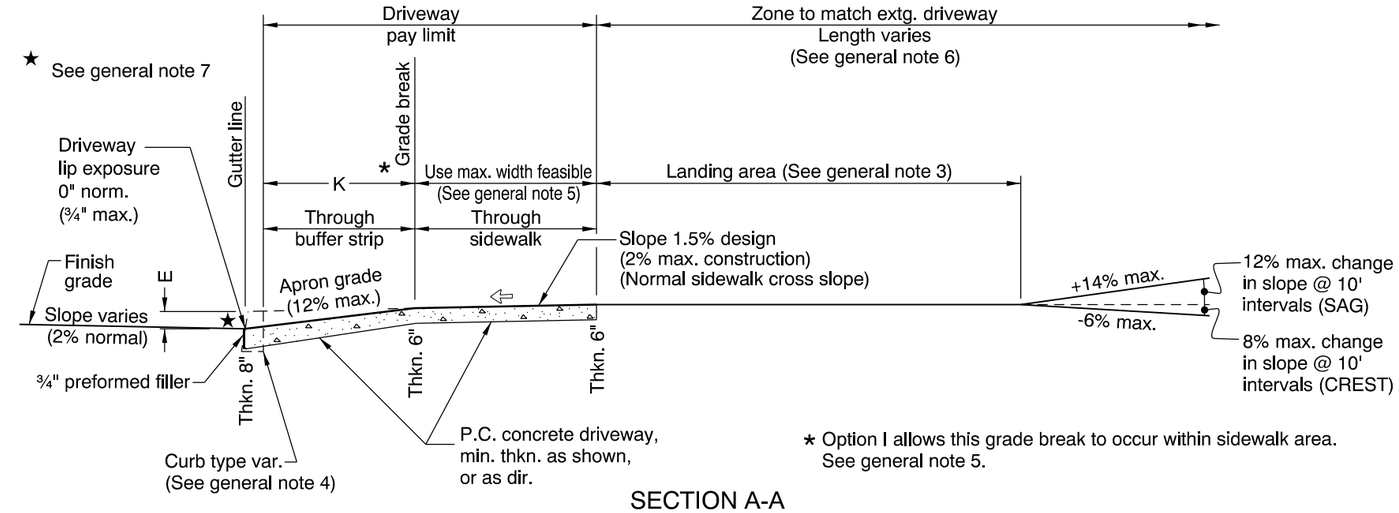

SECTION A-A

GENERAL NOTES FOR ALL DETAILS:

1. Details are based on United States Access Board Standards.
2. Only use details allowed by jurisdiction.
3. The following dimensions are as shown on plans, or as directed: driveway width, driveway slope, sidewalk width, buffer strip width, curb exposure, driveway lip exposure, landing area length and width. See project plans for details not shown.
4. Curb, gutter, and sidewalk types varies, see plans.
   See Std. Drgs. RD700 & RD701 for curb details.
   See Std. Drg. RD720 for sidewalk details.
5. 4' unobstructed clear passage with slope of 1.5% design (2% max. construction) is required behind driveway apron. 3.5' width is acceptable where sidewalk width is less than standard 6'.
6. Where existing driveway is in good condition, and meets slope requirements, construct only as much as required for satisfactory connection with new work.
7. Check the gutter flow depth at driveway locations to assure that the design flood does not overtop the back of sidewalk at driveway.
   If overtopping occurs place an inlet at upstream side of driveway or perform other approved design mitigation.
8. Tooled joints are required at all driveway slope break lines.
9. 15' min. of the driveway behind the sidewalk should be surfaced to prevent tracking of gravel onto the sidewalk.
10. Any dimensions except those of general note 5 may be amended by local agencies for their use.

Sidewalk

Driveway pay limit

⇦ Slope 1.5% design (2% max. construction) (Normal sidewalk cross slope)

🡐 Slope 7.5% design (8.3% max. construction) (Ramp length 15' max.)

W Width of driveway

K Buffer strip width

E Curb exposure

NOTE:
This drawing is to be used by local agencies to assist them in the design of driveways on their facilities.

CALC. BOOK NO. N/A

The selection and use of this Standard Drawing, while designed in accordance with generally accepted engineering principles and practices, is the sole responsibility of the user and should not be used without consulting a Registered Professional Engineer.

BASELINE REPORT DATE 21-JUL-2015

NOTE: All material and workmanship shall be in accordance with the current Oregon Standard Specifications

OREGON STANDARD DRAWINGS

SEPARATED SIDEWALK DRIVEWAYS OR ALLEYS (OPTIONS H, I & J) LOCAL JURISDICTIONS

2015

DATE	REVISION DESCRIPTION
01-2015	REVISED NOTES
07-2015	REVISED NOTES

rd740.dgn 21-JUL-2015

RD740

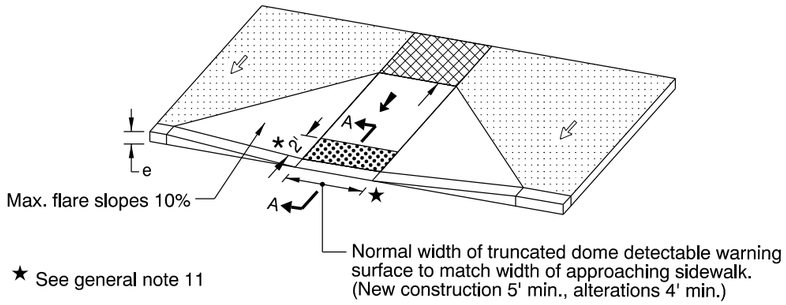

PERPENDICULAR SIDEWALK RAMP DETAIL

(Use "Parallel Sidewalk Ramp Detail" or "Combination Sidewalk Ramp Detail" when reqd. turning space cannot be obtained)

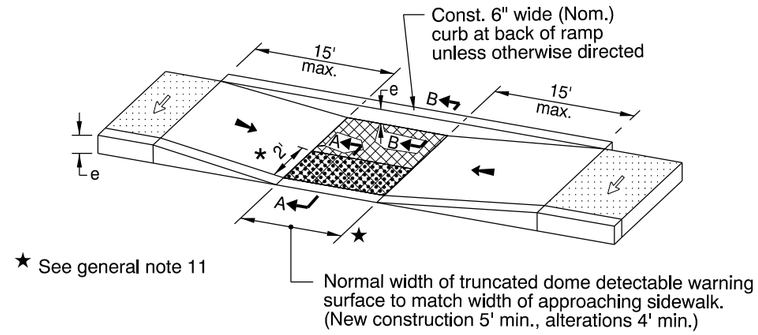

PARALLEL SIDEWALK RAMP DETAIL

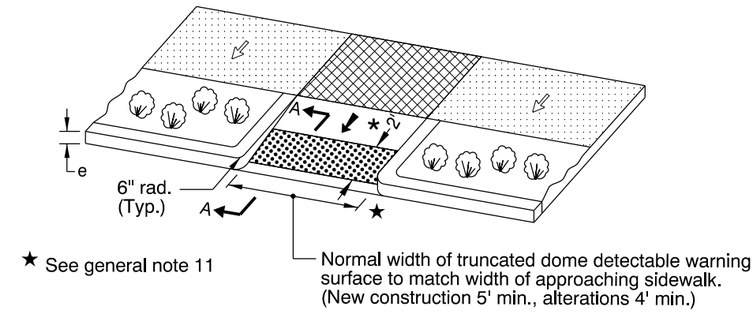

PERPENDICULAR SIDEWALK RAMP DETAIL (THROUGH BUFFER STRIP)

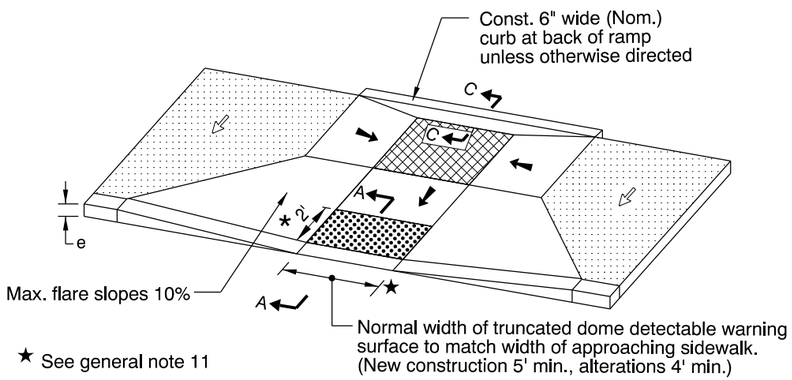

COMBINATION SIDEWALK RAMP DETAIL

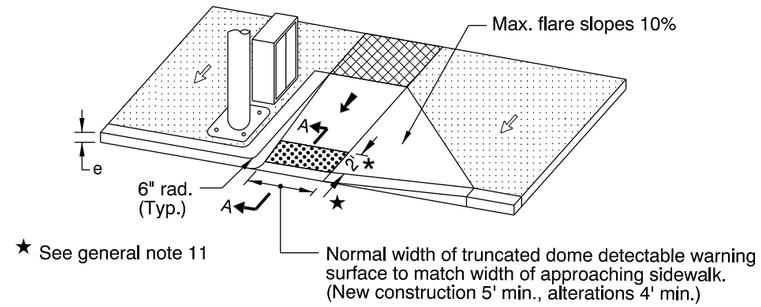

PERPENDICULAR SIDEWALK RAMP DETAIL (WITH SINGLE FLARE)

(Use "Parallel Sidewalk Ramp Detail" or "Combination Sidewalk Ramp Detail" when reqd. turning space cannot be obtained)

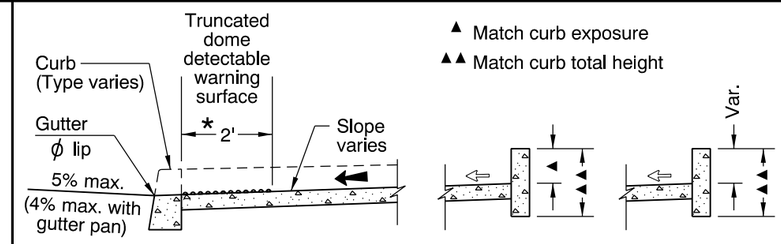

Sidewalk

Turning space
Min. level area 4' x 4'
4' x 5' when constrained (with longer dimension in direction of ramp travel).
For the purposes of this application, a 2% maximum construction slope (for drainage) is considered level.

Truncated dome detectable warning surface

⇦ Slope 1.5% design (2% max. construction) (Normal sidewalk cross slope)

🡄 Slope 7.5% design (8.3% max. construction) (Ramp length 15' max.)

*2' See general note 5

GENERAL NOTES FOR ALL DETAILS:

1. Sidewalk ramp details are based on United States Access Board Standards.
2. See Std. Drgs. RD700 & RD701 for curbs. See Std. Drg. RD720 for sidewalks. See Std. Drgs. TM503 & TM530 for crosswalk markings, widths, etc.
3. Tooled joints are required at all sidewalk ramp slope break lines.
4. Sidewalk curb ramp slopes shown are relative to the true level horizon (Zero bubble).
5. Place truncated dome detectable warning surface in the lower 2' adjacent to traffic of throat of ramp only. For details not shown, see Std. Drg. RD759.
6. Side flares that are not part of the path of travel may be any slope.
7. Sidewalk flare is not necessary where the ramp is protected from pedestrian cross-travel.
8. For the purpose of this drawing, a curb ramp is considered "perpendicular" if the angle between the longitudinal axis of the ramp and a line tangent to the curb at the ramp center is 75° or greater.
9. Ramps for paths intersecting a roadway should be full width of path, excluding flares. When a ramp is used to provide bicycle access from a roadway to a sidewalk, the ramp should be 8' wide.
10. For sidewalk ramp placement options, see Std. Drgs. RD756 & RD757.
11. Check the gutter flow depth at ramp locations to assure that the design flood does not overtop the back of sidewalk at ramp. If overtopping occurs place an inlet at upstream side of ramp or perform other approved design mitigation.
12. Only use details allowed by jurisdiction.
13. Site conditions normally require a project specific design. See project plans for details not shown.

CALC. BOOK NO. N/A

BASELINE REPORT DATE 21-JUL-2015

NOTE: All material and workmanship shall be in accordance with the current Oregon Standard Specifications

The selection and use of this Standard Drawing, while designed in accordance with generally accepted engineering principles and practices, is the sole responsibility of the user and should not be used without consulting a Registered Professional Engineer.

OREGON STANDARD DRAWINGS

SIDEWALK RAMP DETAILS

2015

DATE	REVISION DESCRIPTION
01-2015	REVISED & ADDED NOTES
07-2015	ADDED DETAIL & REVISED NOTES

rd755.dgn 21-JUL-2015

RD755

Effective Date: December 1, 2015 - May 31, 2016

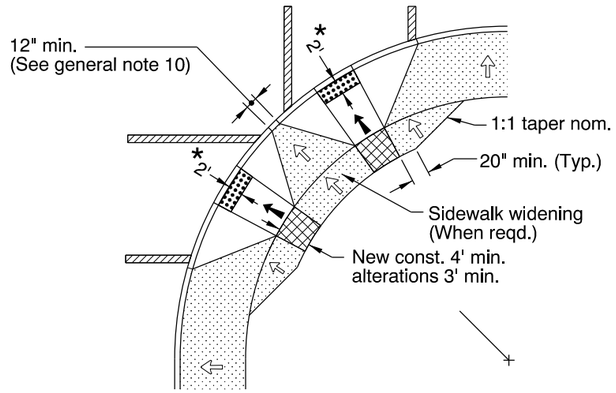

OPTION G
PERPENDICULAR RAMPS (FOR NARROW SIDEWALKS)

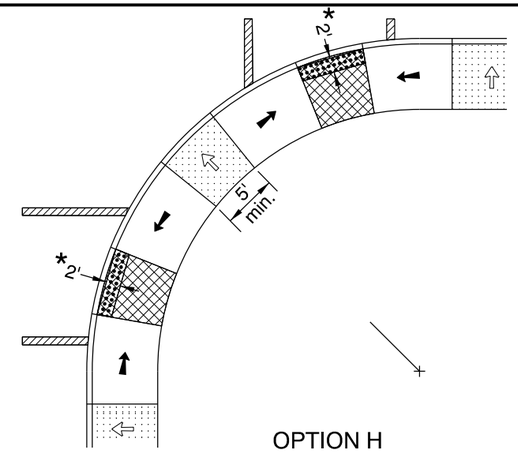

OPTION H
PARALLEL RAMPS (FOR NARROW SIDEWALKS)

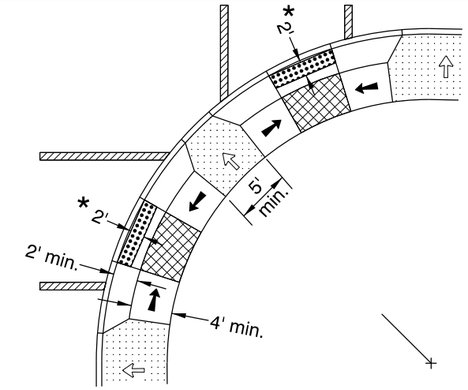

OPTION I
COMBINATION RAMPS (FOR WIDE SIDEWALKS)

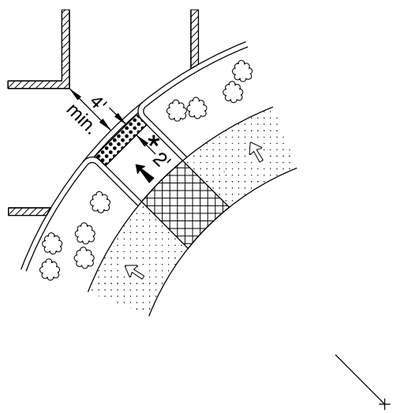

OPTION J
DIAGONAL RAMP WITH LANDSCAPED BUFFER STRIP
Use in alterations only and when site constraints prohibit installing two ramps

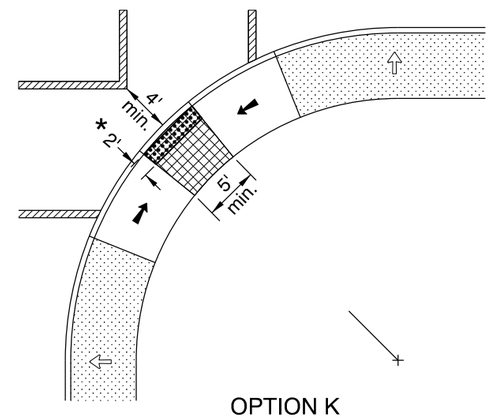

OPTION K
DIAGONAL-PARALLEL RAMP (FOR NARROW SIDEWALKS)
Use in alterations only and when site constraints prohibit installing two ramps

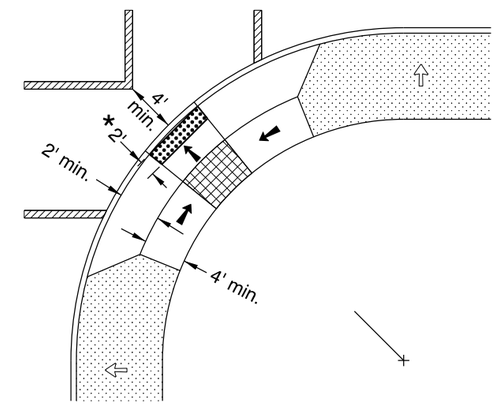

OPTION L
DIAGONAL-COMBINATION RAMP (FOR WIDE SIDEWALKS)
Use in alterations only and when site constraints prohibit installing two ramps

Marked or intended crossing location

Sidewalk

Turning space
Min. level area 4' x 4'
4' x 5' when constrained (with longer dimension in direction of ramp travel).
For the purposes of this application, a 2% maximum construction slope (for drainage) is considered level.

Truncated dome detectable warning surface

Slope 1.5% design
(2% max. construction)
(Normal sidewalk cross slope)

Slope 7.5% design
(8.3% max. construction)
(Ramp length 15' max.)

*2' See general note 5

GENERAL NOTES FOR ALL DETAILS:

1. Sidewalk ramp details are based on United States Access Board Standards.
2. See Std. Drgs. RD700 & RD701 for curbs. See Std. Drg. RD720 for sidewalks. See Std. Drgs. TM503 & TM530 for crosswalk markings, widths, etc. See Std. Drg. RD755 for sidewalk ramp details.
3. Tooled joints are required at all sidewalk ramp slope break lines.
4. Sidewalk curb ramp slopes shown are relative to the true level horizon (Zero bubble).
5. Place truncated dome detectable warning surface in the lower 2' adjacent to traffic of throat of ramp only. For details not shown, see Std. Drg. RD759.
6. Side flares that are not part of the path of travel may be any slope. Check the gutter flow depth to assure that the design flood does not overtop the back of sidewalk. If overtopping occurs place an inlet at upstream side or perform other approved design mitigation.
7. Sidewalk flare is not necessary where the ramp is protected from pedestrian cross-travel.
8. For the purpose of this drawing, a curb ramp is considered "perpendicular" if the angle between the longitudinal axis of the ramp and a line tangent to the curb at the ramp center is 75° or greater.
9. Ramps for paths intersecting a roadway should be full width of path, excluding flares. When a ramp is used to provide bicycle access from a roadway to a sidewalk, the ramp should be 8' wide.
10. When 2 curb ramps are immediately adjacent as in Option G, the curb exposure (e) between the adjacent side flares may range between 3" and full design exposure.
11. Only use options allowed by jurisdiction.
12. See project plans for details not shown.

CALC. BOOK NO. N/A

BASELINE REPORT DATE 21-JUL-2015

NOTE: All material and workmanship shall be in accordance with the current Oregon Standard Specifications

The selection and use of this Standard Drawing, while designed in accordance with generally accepted engineering principles and practices, is the sole responsibility of the user and should not be used without consulting a Registered Professional Engineer.

OREGON STANDARD DRAWINGS

SIDEWALK RAMP PLACEMENT OPTIONS LARGE RADII

2015

DATE	REVISION DESCRIPTION
01-2015	REVISED DRAWING TITLE, DETAILS & NOTES
07-2015	REVISED NOTES

rd757.dgn 21-JUL-2015

RD757

Effective Date: December 1, 2015 - May 31, 2016

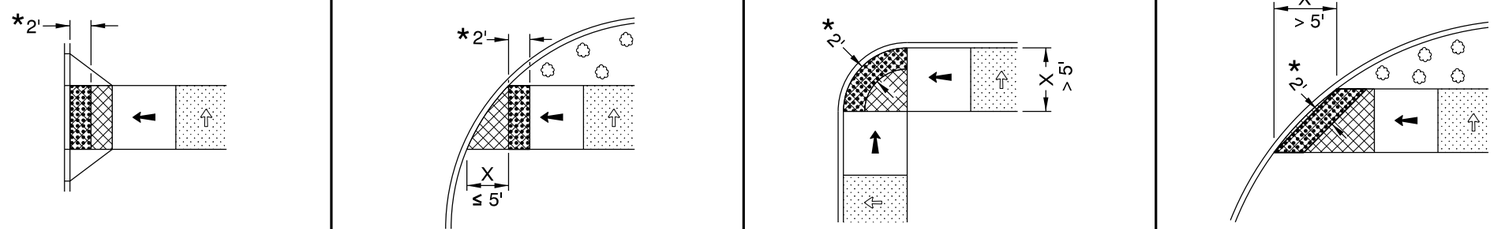

When distance "X" is less than 5', truncated dome detectable warning surface shall be placed perpendicular to the path of travel.

When distance "X" is greater than 5', truncated dome detectable warning surface shall be placed parallel to the bottom of curb ramp.

PLACEMENT ON SIDEWALK RAMP

- Marked or intended crossing location
- Sidewalk
- Turning space
  Min. level area 4' x 4'
  4' x 5' when constrained (with longer dimension in direction of ramp travel).
  For the purposes of this application, a 2% maximum construction slope (for drainage) is considered level.
- Truncated dome detectable warning surface
- Slope 1.5% design (2% max. construction) (Normal sidewalk cross slope)
- Slope 7.5% design (8.3% max. construction) (Ramp length 15' max.)
- *2' See general note 3

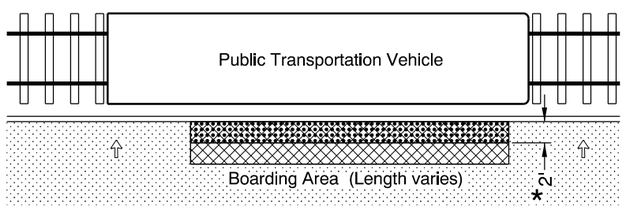

PLACEMENT ON PUBLIC TRANSPORTATION PLATFORM

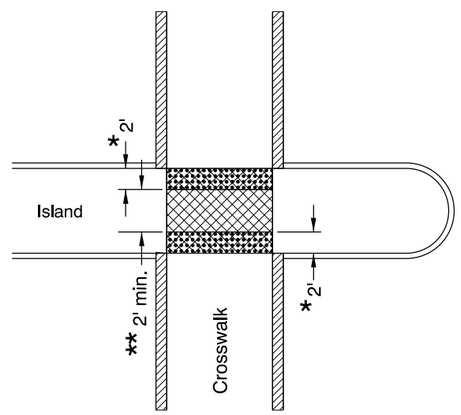

** Omit truncated dome detectable warning surfaces if less than 2'

PLACEMENT ON CROSSING ISLAND

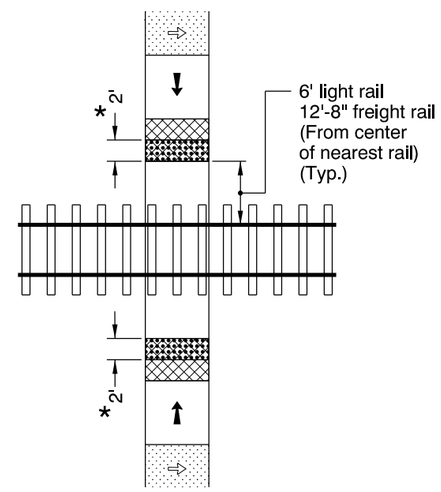

PLACEMENT AT RAIL CROSSING

GENERAL NOTES FOR ALL DETAILS:

1. Truncated dome detectable warning surface details & locations are based on United States Access Board Standards.
2. See Std. Drgs. RD700 & RD701 for curbs. See Std. Drg. RD720 for sidewalks. See Std. Drgs. TM503 & TM530 for crosswalk markings, widths, etc. See Std. Drg. RD705 for islands.
3. Place truncated dome detectable warning surface in the lower 2' adjacent to traffic of throat of ramp only, unless otherwise shown. Arrange domes using square in-line pattern only. Color to be safety yellow if no color specified in construction note. All products on an installation to be identical.
4. Truncated dome detectable warning surface shall be used where the pedestrian access route meets the street, in the following locations:
   a) Sidewalk ramps (See Std. Drgs. RD755, RD756, & RD757).
   b) Crossing islands (Accessible Route Islands), (See Std. Drg. RD710).
   c) Rail crossings (See detail).
5. Where public transportation stations (rail, bus, etc.) use platform boarding, truncated dome detectable warning surface shall be placed along the full edge length of the station, when not protected by platform screens or guards.
6. Truncated dome detectable warning surface shall not be used on the following locations:
   a) Midblock sidewalk transitions (See Std. Drg. RD756).
   b) Standard concrete driveways (See Std. Drgs. RD725, RD730, RD735, RD740, RD745, & RD750).
   c) Parking lots.
7. Only use details allowed by jurisdiction.
8. See project plans for details not shown.

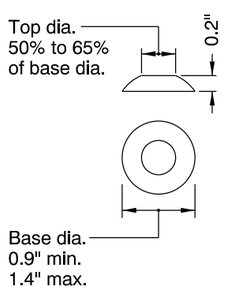

TRUNCATED DOME DETAIL

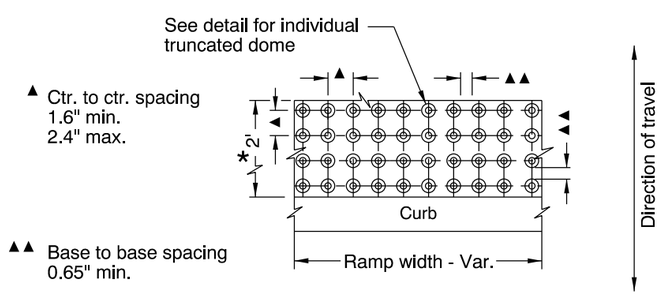

TRUNCATED DOME PATTERN

TRUNCATED DOME DETECTABLE WARNING SURFACE

CALC. BOOK NO. N/A

BASELINE REPORT DATE 21-JUL-2015

NOTE: All material and workmanship shall be in accordance with the current Oregon Standard Specifications

The selection and use of this Standard Drawing, while designed in accordance with generally accepted engineering principles and practices, is the sole responsibility of the user and should not be used without consulting a Registered Professional Engineer.

OREGON STANDARD DRAWINGS

TRUNCATED DOME DETECTABLE WARNING SURFACE DETAILS & LOCATIONS

2015

DATE	REVISION DESCRIPTION
01-2015	REVISED DETAILS & NOTES
07-2015	REVISED NOTES

rd759.dgn 21-JUL-2015

RD759

Effective Date: December 1, 2015 - May 31, 2016

TYPE CL-6

For runs of fence of 20' or less, omit truss rod and install lower brace rail in alternate position at End and Corner Posts.

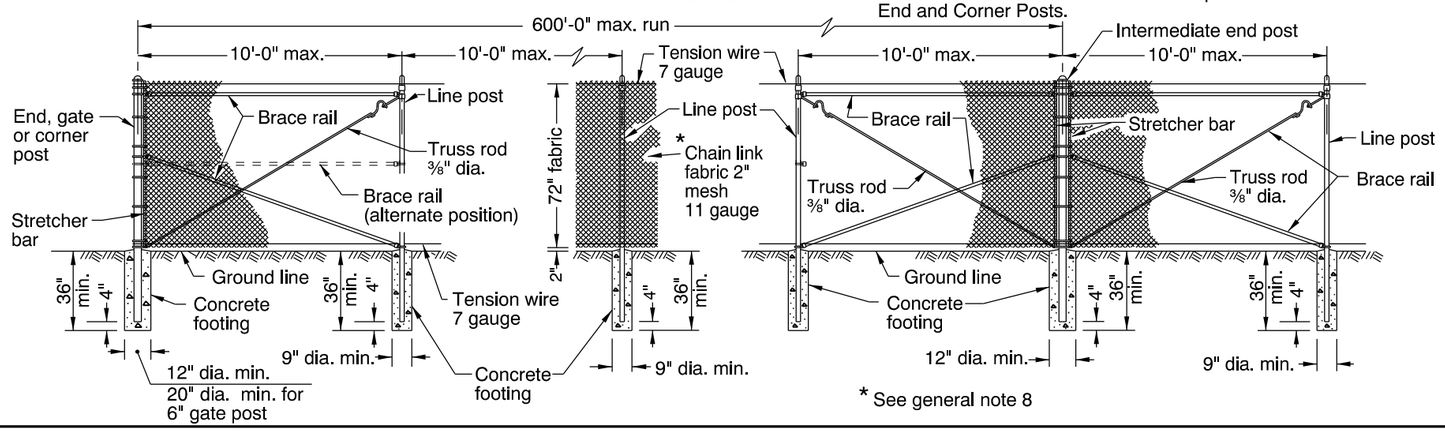

TYPE CL-6R

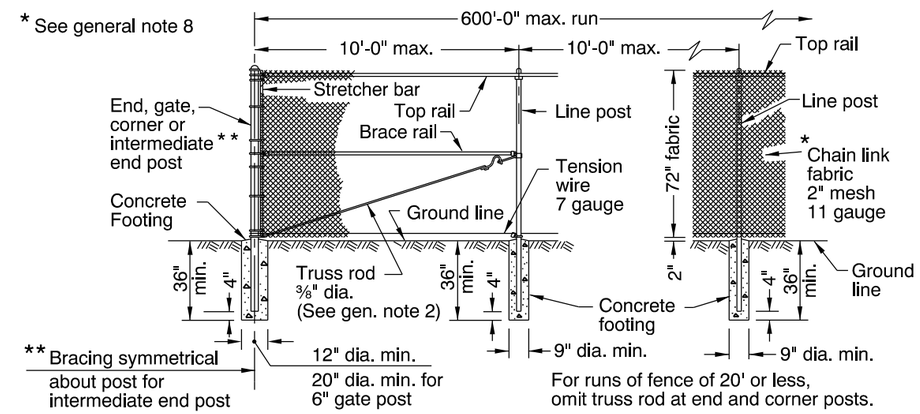

TYPES CL-4 & CL-5

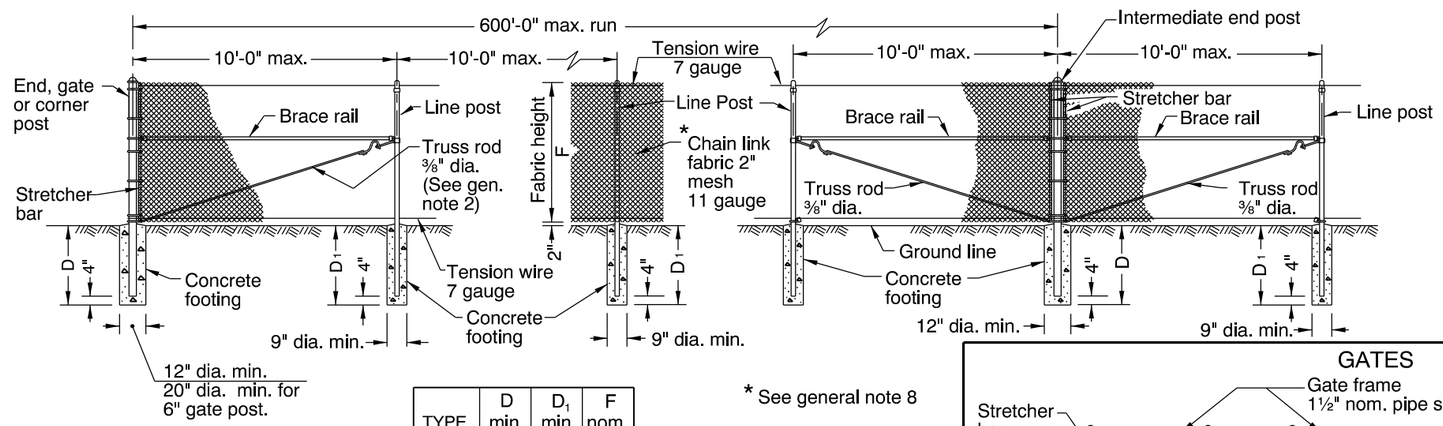

TYPE	D min. (in)	D_1 min. (in)	F nom. (in)
CL-4	30	24	48
CL-5	36	36	60

TYPES CL-4R & CL-5R

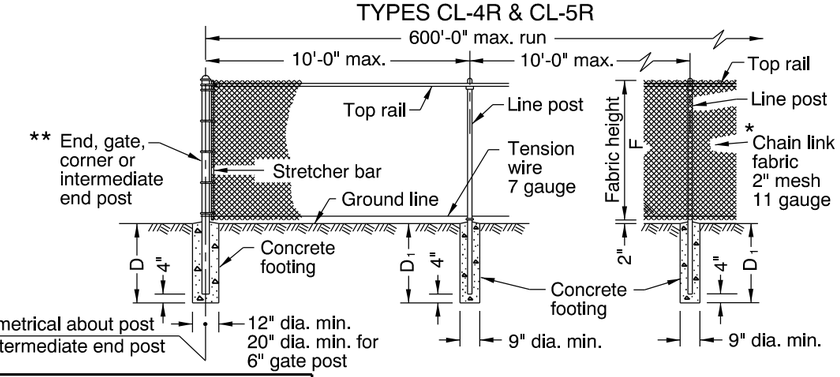

* See general note 8

TYPE	D min. (in)	D_1 min. (in)	F nom. (in)
CL-4R	30	24	48
CL-5R	36	36	60

For runs of fence of 20' or less, omit truss rod at end and corner posts.

GATES

* See general note 8

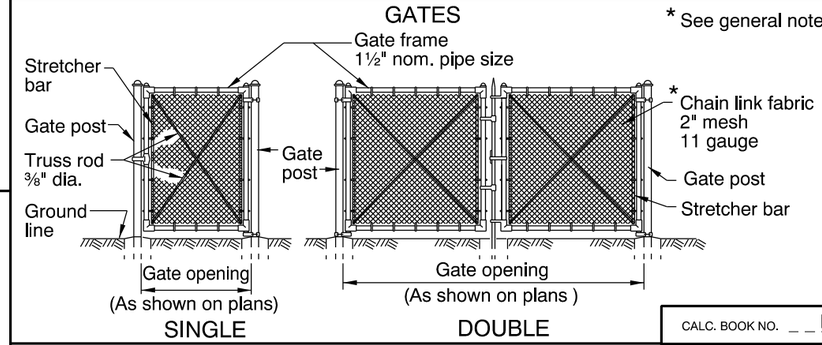

SINGLE DOUBLE

TABLE 1

TYPE		MEMBER: BRACE AND TOP RAILS, TUBULAR, Fence Industry (in)	BRACE AND TOP RAILS, TUBULAR, Nom. Dia. (in)	LINE POSTS, TUBULAR, Fence Industry (in)	LINE POSTS, TUBULAR, Nom. Dia. (in)	LINE POSTS, H-SECTION, Size (in)	LINE POSTS, H-SECTION, Wt. lb/ft	END, CORNER & INTERMEDIATE END POST, TUBULAR, Fence Industry (in)	END, CORNER & INTERMEDIATE END POST, TUBULAR, Nom. Dia. (in)
STEEL	CL-4 & CL-4R CL-5 & CL-5R	1⅝	1¼	1⅞	1½	1⅞ x 1⅝	2.72	2⅜	2
STEEL	CL-6 & CL-6R	1⅝	1¼	2⅜	2	2¼ x 2	4.10	2⅞	2½

GATE OPENING (ft) SINGLE GATE	GATE OPENING (ft) DOUBLE GATE	GATE POSTS, TUBULAR, Fence Industry (in)	GATE POSTS, TUBULAR, Nom. Dia. (in)	
Up thru 6	Up thru 12	2⅞	2½	STEEL
7 thru 13	13 thru 26	4	3½	STEEL
14 thru 18	27 thru 36	6⅝	6	STEEL

NOTE: For CL-8, CL-8R, CL-10 & CL-10R, the CL-6 & CL-6R hardware is minimum and does not include slat wind loading.

GENERAL NOTES FOR ALL DETAILS:

1. Do not use top rail where fence can be struck by an errant vehicle.
2. Fittings shown are illustrative of use and not specific as to design.
3. Gate posts on each side of a gate opening to be the same size. At a double gate installation with unequal width gates, size of both posts to be as indicated for a single gate installation of the wider gate width.
4. For cross sectional dimensions of members, see Table 1.
5. Posts and rails with sections not shown that meet the requirements of AASHTO M181 are acceptable alternates. See ODOT's QPL for acceptable alternates.
6. All concrete shall be commercial grade concrete.
7. All chain link fabric top and bottom selvage shall be knuckled finish.
8. Chain link fabric for the fence to be installed with pickets shall be 9 gauge wire woven in 3½" by 5½" diamond mesh.

The selection and use of this Standard Drawing, while designed in accordance with generally accepted engineering principles and practices, is the sole responsibility of the user and should not be used without consulting a Registered Professional Engineer.

CALC. BOOK NO. N/A

BASELINE REPORT DATE 14-JUL-2014

NOTE: All material and workmanship shall be in accordance with the current Oregon Standard Specifications

OREGON STANDARD DRAWINGS

CHAIN LINK FENCE

2015

DATE	REVISION DESCRIPTION

rd815.dgn 14-JUL-2014

RD815

Effective Date: December 1, 2015 - May 31, 2016

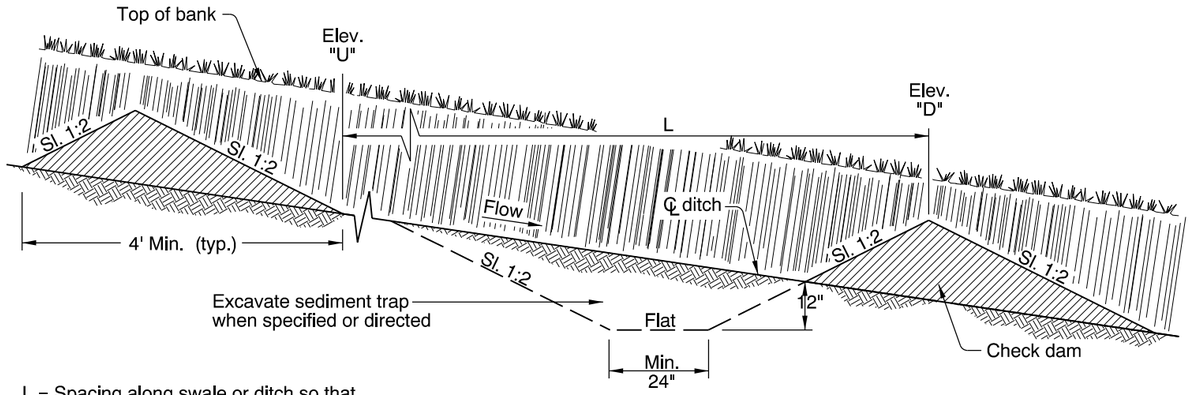

L = Spacing along swale or ditch so that Elevation "U" equals Elevation "D".

TYPICAL PROFILE SECTION CHECK DAMS
(SHOWN WITH AGGREGATE)

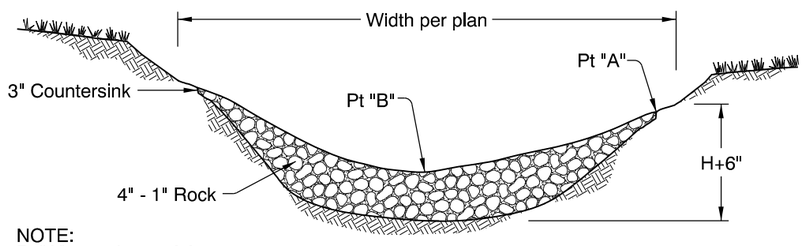

NOTE:
Pt "A" must be a minimum of 6" higher than Pt "B"

AGGREGATE CHECK DAM - TYPE 1

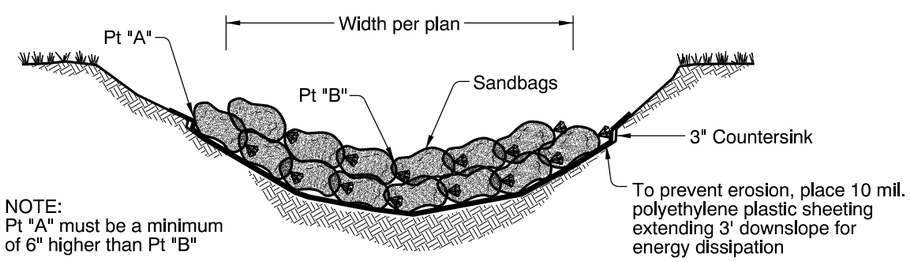

NOTE:
Pt "A" must be a minimum of 6" higher than Pt "B"

SANDBAG CHECK DAM - TYPE 4

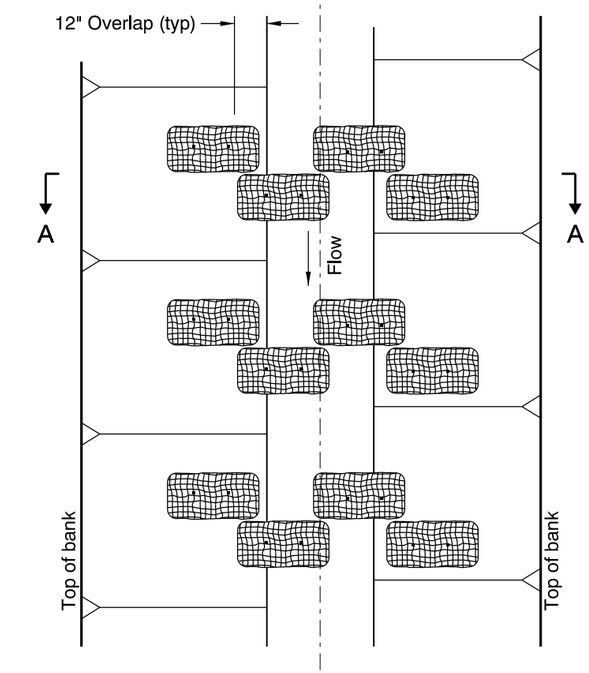

PLAN

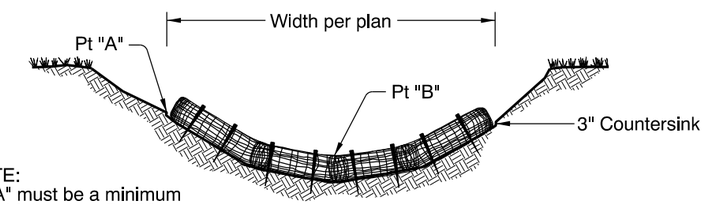

NOTE:
Pt "A" must be a minimum of 6" higher than Pt "B"

SECTION A-A

BIOFILTER BAG CHECK DAM - TYPE 3

NOTES:

1. Type 3 - stake biofilter bags with two 2" X 2" X 18" (min) wood stakes per bag. Drive stakes a minimum of 6" into the ground and flush with the top of the bags. Omit stakes if placed over paved surfaces. Overlap bags 6" min at each joint.
2. Type 4 - Tightly abut or overlap ends of sandbags at each joint.
3. Spacing between check dams for all check dam types shall comply with the typical profile section shown above.

MAXIMUM CHECK DAM SPACING "L"			
Ditch Grade	H=6"	H=12"	H=18"
6%	* *	15'	25'
5%	* *	20'	30'
4%	* *	25'	40'
3%	15'	30'	50'
2%	25'	50'	80'

* * Not Allowed
H = Min dam height

CALC. BOOK NO. N/A

BASELINE REPORT DATE 01-JAN-2013

NOTE: All material and workmanship shall be in accordance with the current Oregon Standard Specifications

The selection and use of this Standard Drawing, while designed in accordance with generally accepted engineering principles and practices, is the sole responsibility of the user and should not be used without consulting a Registered Professional Engineer.

OREGON STANDARD DRAWINGS

CHECK DAMS
TYPE 1, 3 AND 4

2015

DATE	REVISION DESCRIPTION

rd1005.dgn 03-03-2015

RD1005

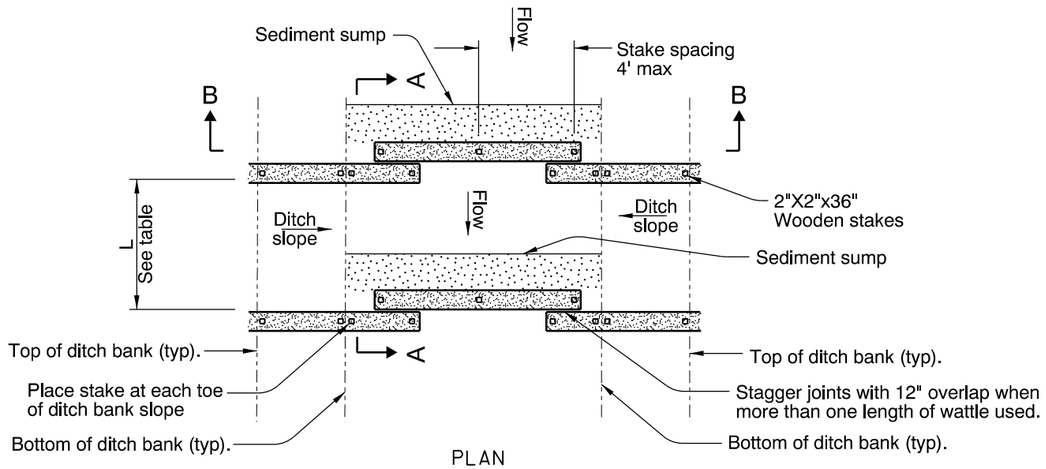

PLAN

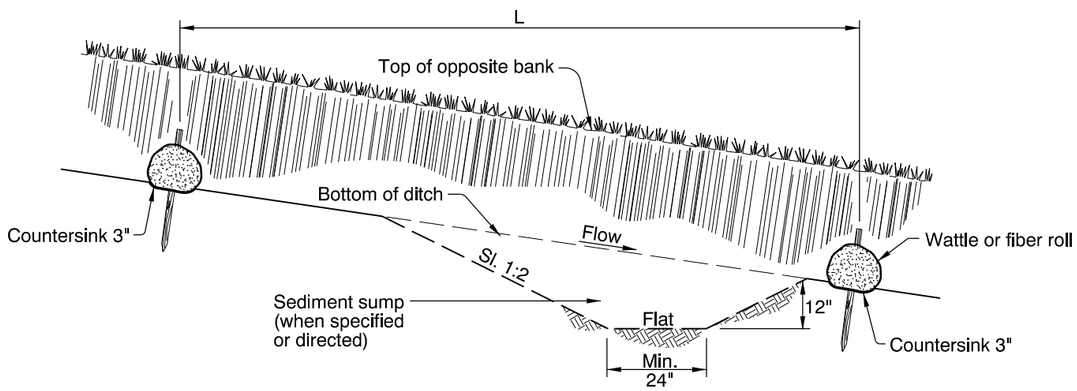

SECTION A-A

WATTLE / FIBER ROLL CHECK DAM - TYPE 2

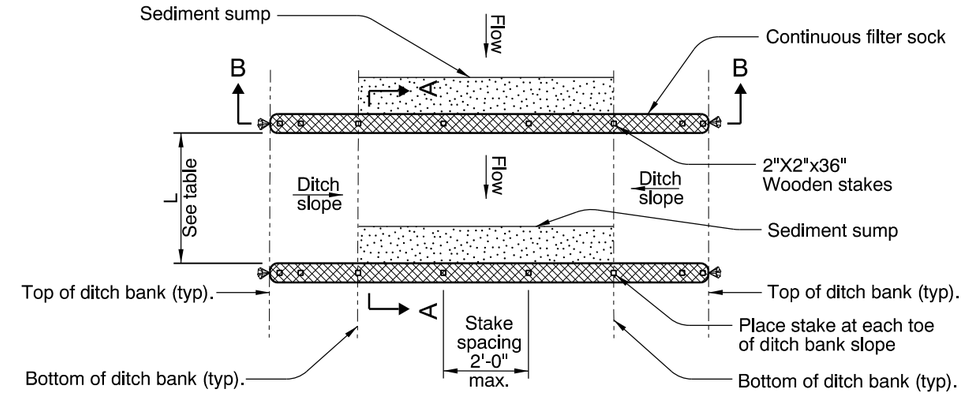

PLAN

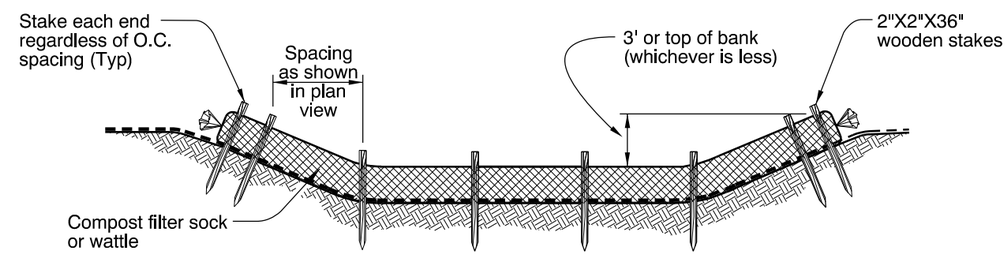

SECTION B-B

Note:
For stacking options refer to RD1032.

COMPOST FILTER SOCK CHECK DAM - TYPE 6

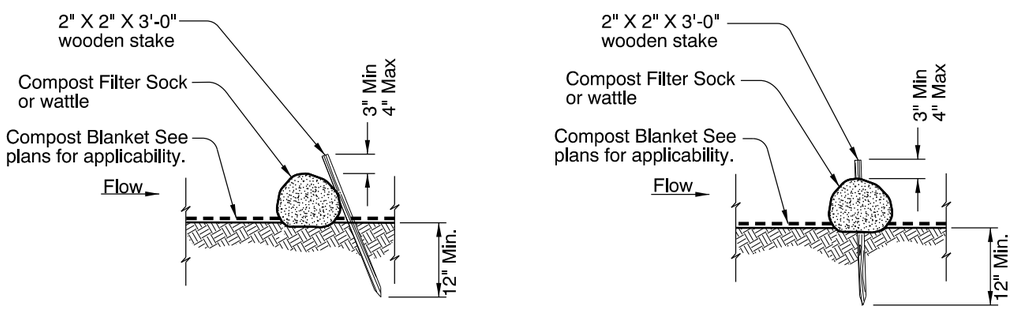

ALTERNATIVE 1 (Staking)

ALTERNATIVE 2 (Staking)

FIBER ROLL STAKING

MAXIMUM SLOPE LENGTH (L) ABOVE CHECK DAM (in FT)				
TYPE 2 AND 6 CHECK DAMS				
Slope %	Check dam diameter			
	8"	12"	18"	24"
2 or less	300	375'	500'	650'
5	200	250'	275'	325'
10	100	125'	150'	200'
15	70'	85'	100'	160'
20	50'	65'	70'	130'
25	40'	50'	55'	100'
30	30'	40'	45'	65'
35	30'	40'	45'	55'
40	30'	40'	45'	50'
45	20'	25'	30'	40'
50	20'	25'	30'	35'

CALC. BOOK NO. N/A

BASELINE REPORT DATE 01-JAN-2013

NOTE: All material and workmanship shall be in accordance with the current Oregon Standard Specifications

The selection and use of this Standard Drawing, while designed in accordance with generally accepted engineering principles and practices, is the sole responsibility of the user and should not be used without consulting a Registered Professional Engineer.

OREGON STANDARD DRAWINGS

CHECK DAMS
TYPE 2 AND 6

2015

DATE	REVISION DESCRIPTION

rd1006.dgn 03-03-2015

RD1006

Effective Date: December 1, 2015 - May 31, 2016

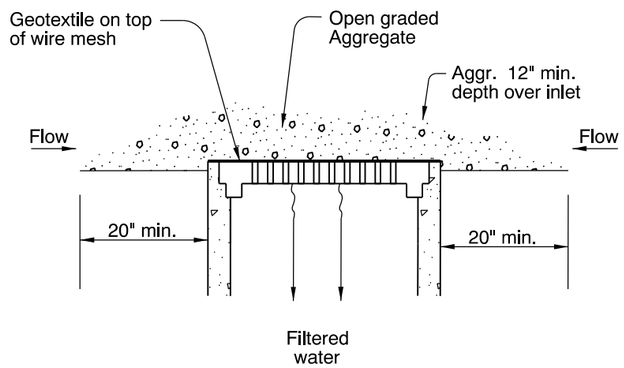

GEOTEXTILE/WIRE MESH/AGGREGATE - TYPE 2

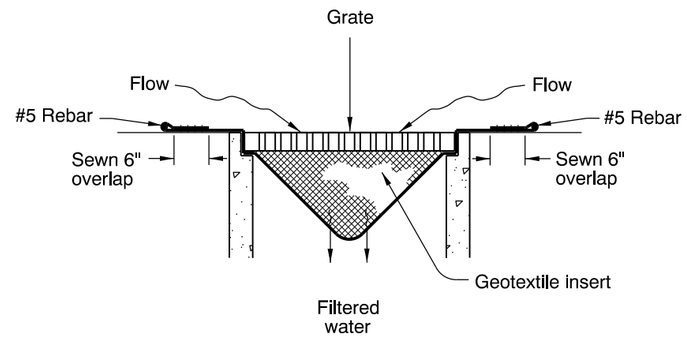

PREFABRICATED FILTER INSERT - TYPE 3

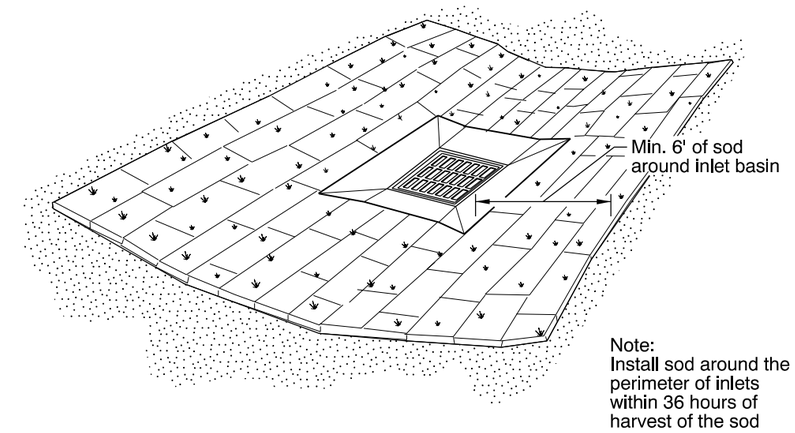

SOD PROTECTION - TYPE 6

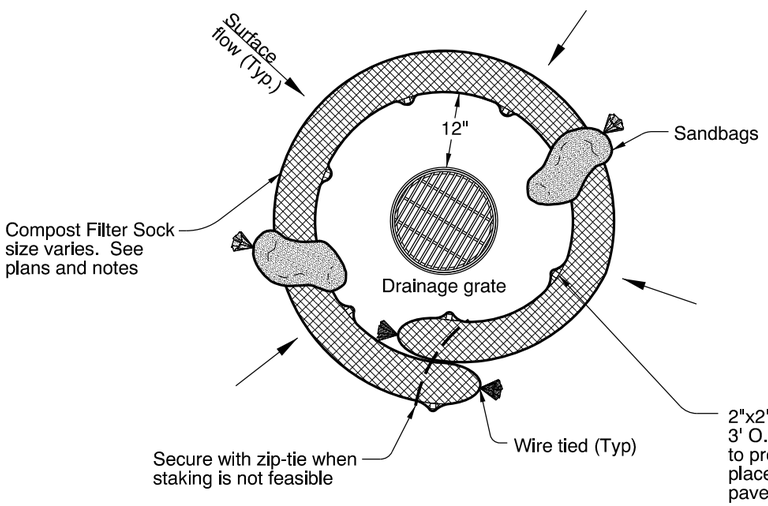

AREA DRAIN PLAN

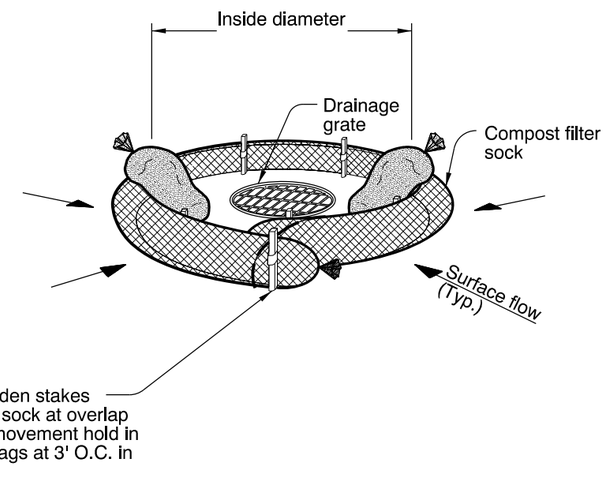

AREA DRAIN PERSPECTIVE VIEW

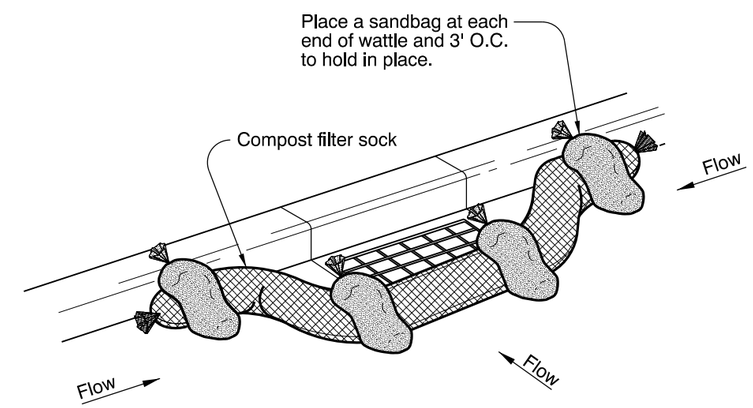

CURB INLET PERSPECTIVE VIEW

COMPOST FILTER SOCK OR WATTLE - TYPE 7

* Use sandbags to hold wattles in place. Sandbags are not necessary for compost filter socks

Notes:

Type 2 - Geotextile/wire mesh/aggregate
Place the wire mesh over the grate.
Place sediment fence geotextile over the wire mesh and perimeter area around structure.
Install aggregate over the geotextile fabric.

Type 3 - Prefabricated filter inserts
Install prefabricated filter inserts according to the plans.
Special provisions, and manufacturer recommendations.
Prefabricated inserts with provisions for overflow are allowed only when accompanied by additional BMP to prevent the potential of sediments entering project storm systems.
Field fabricated inserts are not allowed.

Type 7 - Compost filter sock
Drive 2"X2" wood stakes a minimum of 6" into ground and flush with the top of the sock.
Overlap ends of sock per manufacturers recommendations (1' min, 3' max).
Use 8" to 12" dia sock on curbside in traffic areas.
Use 12" to 18" dia sock in non-traffic areas or areas where the larger sock can be used safely.

CALC. BOOK NO. N/A	BASELINE REPORT DATE 01-JAN-2013
The selection and use of this Standard Drawing, while designed in accordance with generally accepted engineering principles and practices, is the sole responsibility of the user and should not be used without consulting a Registered Professional Engineer.	NOTE: All material and workmanship shall be in accordance with the current Oregon Standard Specifications
	OREGON STANDARD DRAWINGS INLET PROTECTION TYPE 2, 3, 6, and 7 2015

DATE	REVISION DESCRIPTION

rd1010.dgn 03-03-2015

RD1010

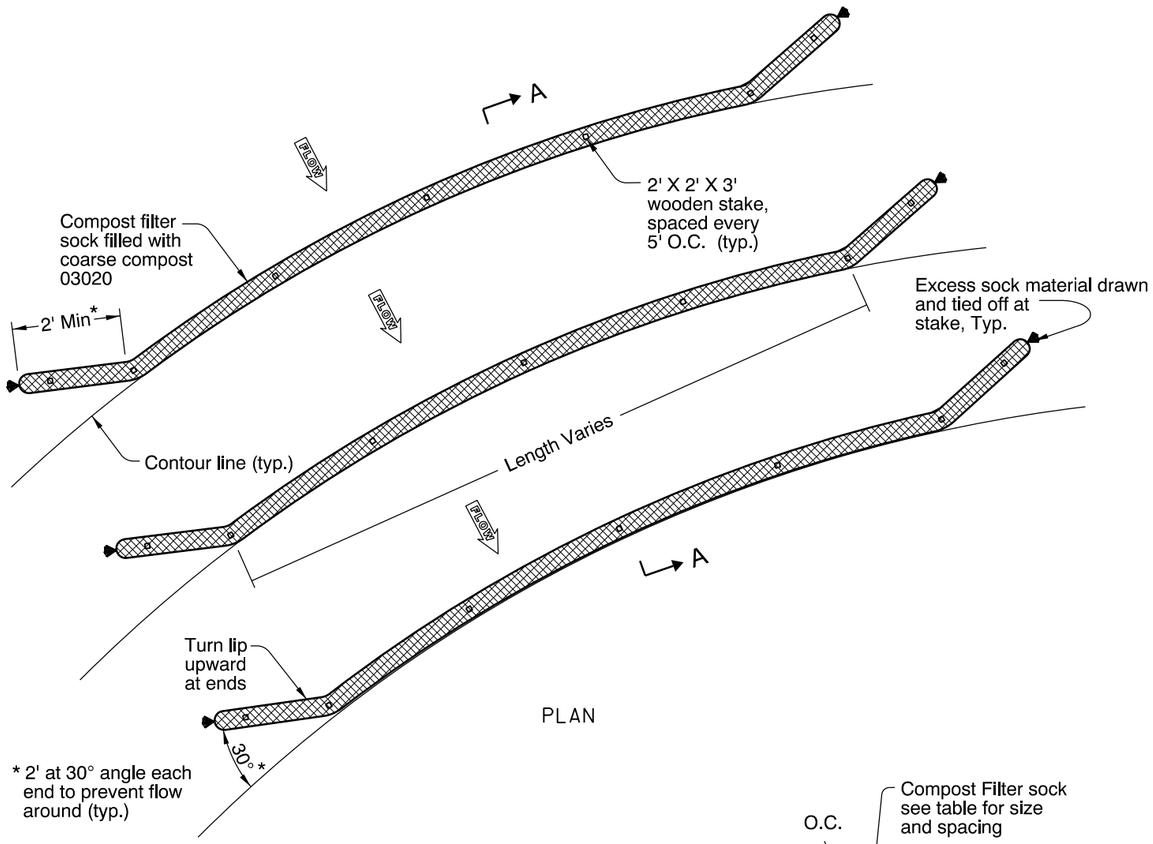

PLAN

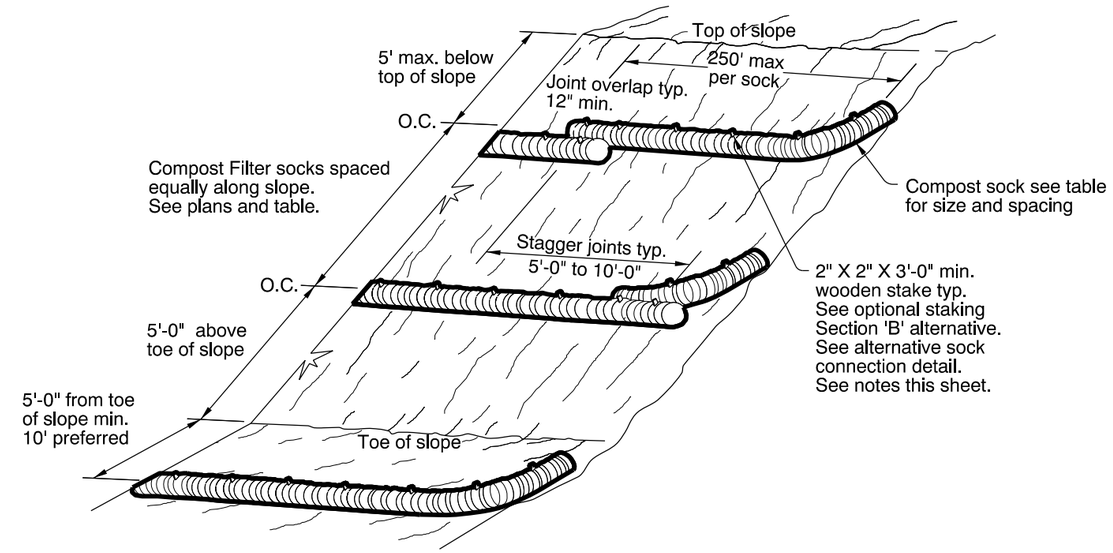

SLOPE APPLICATION - PERSPECTIVE VIEW

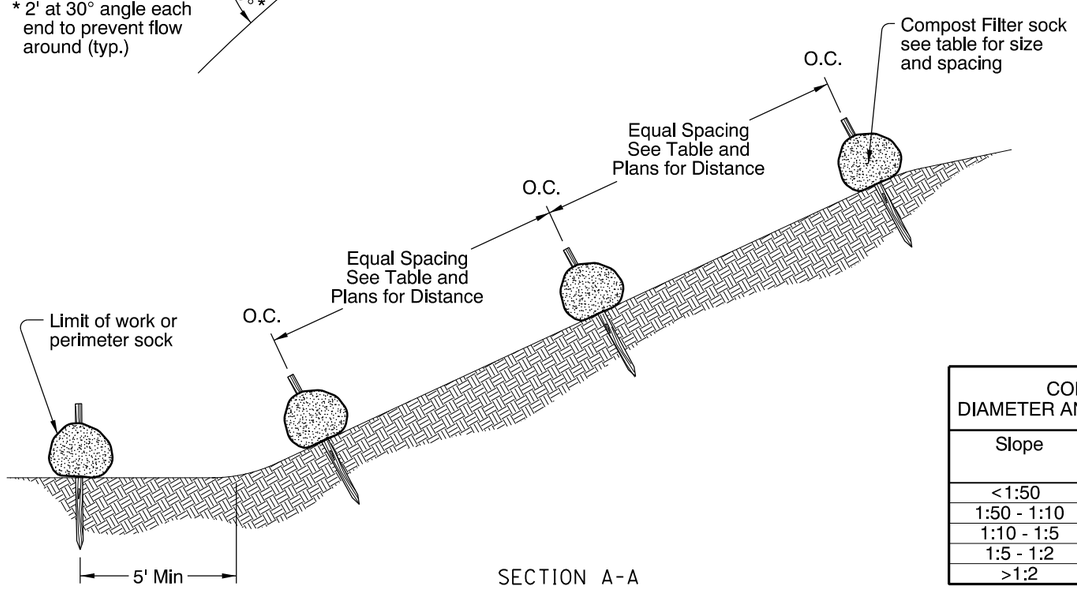

SECTION A-A

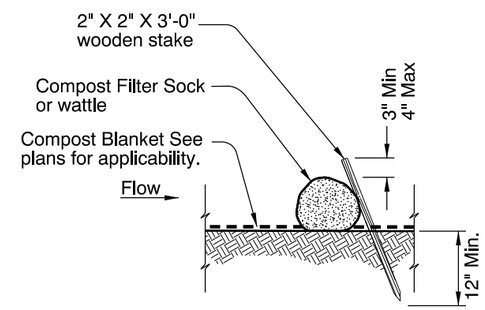

ALTERNATIVE 1 (Staking)

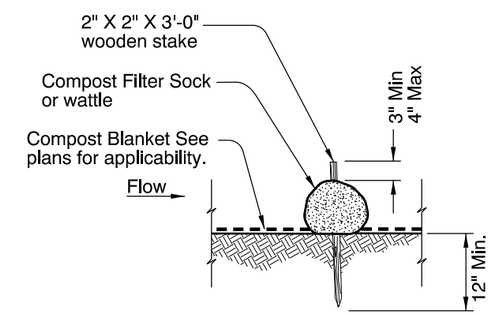

ALTERNATIVE 2 (Staking)

COMPOST FILTER SOCK DIAMETER AND SPACING BASED ON SLOPE		
Slope	Spacing (Ft)	Diameter (In)
<1:50	250	8
1:50 - 1:10	125	12
1:10 - 1:5	100	12
1:5 - 1:2	50	18
>1:2	25	18

COMPOST FILTER SOCK

CALC. BOOK NO. N/A

BASELINE REPORT DATE 01-JAN-2013

NOTE: All material and workmanship shall be in accordance with the current Oregon Standard Specifications

The selection and use of this Standard Drawing, while designed in accordance with generally accepted engineering principles and practices, is the sole responsibility of the user and should not be used without consulting a Registered Professional Engineer.

OREGON STANDARD DRAWINGS

SEDIMENT BARRIER
TYPE 8

2015

DATE	REVISION DESCRIPTION

rd1032.dgn 03-03-2015

RD1032

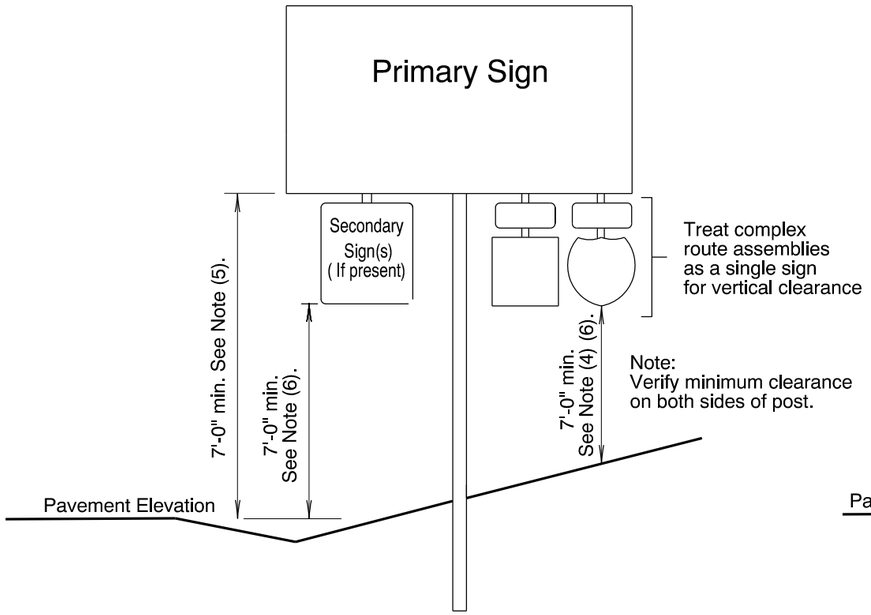

MOUNTING HEIGHT
Guide Sign

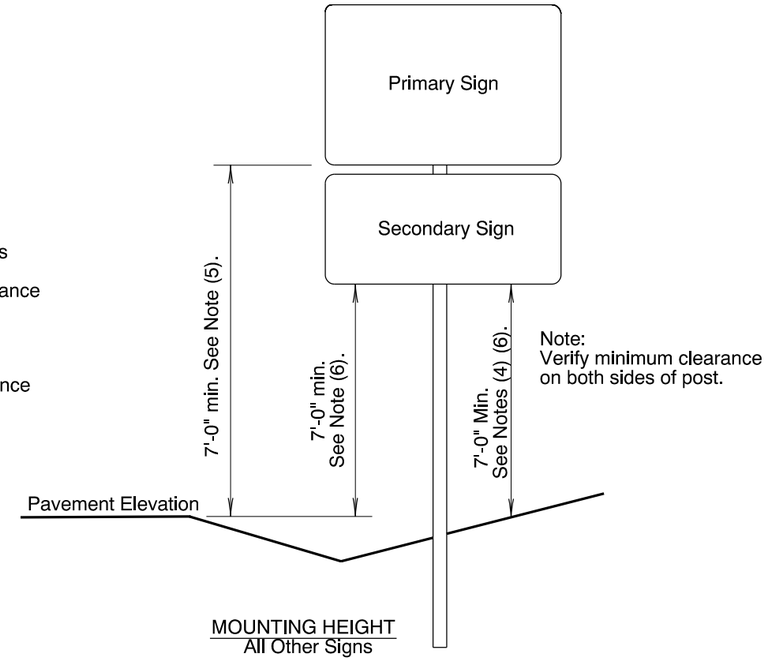

MOUNTING HEIGHT
All Other Signs

General Installation Notes:

a. Signing details shown on this sheet are intended to convey "typical" conditions only. Individual locations may require installation different from those shown.
For guidance regarding unique installations or exceptions call the Project Sign Designer or Region Traffic Section.

b. Locate breakaway supports away from ditches to avoid problems with erosion, corrosion, debris, maintenance and breakaway performance. See Dwg. No. TM635 for more information.

c. For wood post support details see Dwg. No. TM670.

d. For perforated steelsquare tube support details see Dwg. No. TM681.

e. For triangular base breakaway support details see Dwg. No. TM602.

f. For multi-post breakaway support details see Dwg. No. TM600.

g. Mounting heights should not be more than 3 inches more than the minimum heights shown, where practical.

h. 2" vertical spacing between all signs.

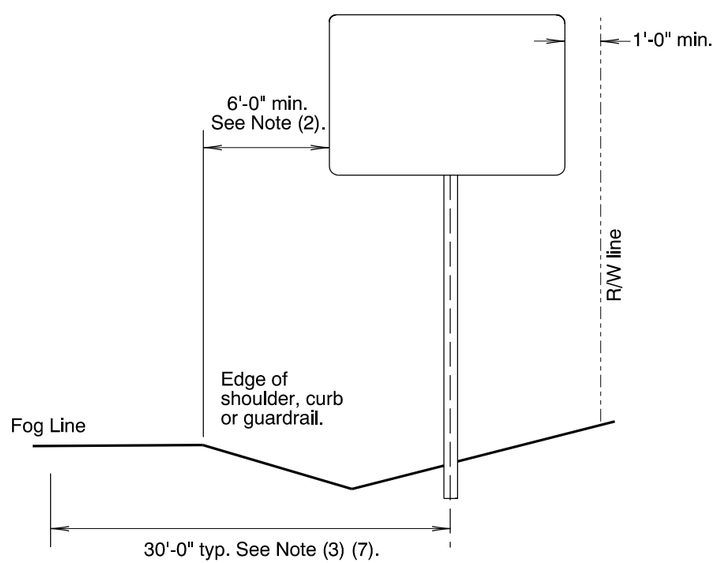

LATERAL OFFSET
Guide Signs

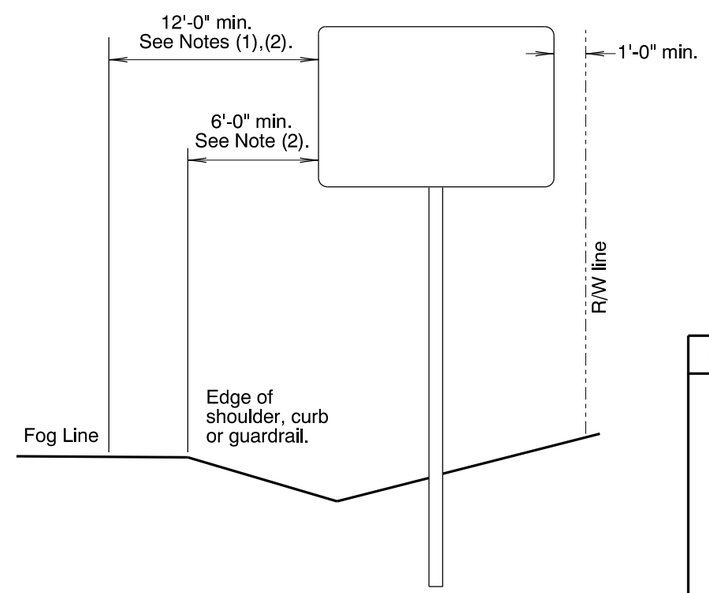

LATERAL OFFSET
All Other Signs

Notes:

1). 6' minimum if behind barrier.

2). 2' minimum if restricted R/W.

3). 20' for ramp terminals.

4). 8' minimum if bicycle path underneath.

5). 8' minimum if secondary signs attached.

6). 5' minimum if outside clearzone, in rural areas and no pedestrians underneath.

7). For multi-post installations measure distance from post closest to roadway.

CALC. BOOK NO. N/A

BASELINE REPORT DATE 01/06/2012

NOTE: All material and workmanship shall be in accordance with the current Oregon Standard Specifications

The selection and use of this Standard Drawing, while designed in accordance with generally accepted engineering principles and practices, is the sole responsibility of the user and should not be used without consulting a Registered Professional Engineer.

OREGON STANDARD DRAWINGS

SIGN INSTALLATION DETAILS

2015

DATE	REVISION DESCRIPTION

TM200.dgn 1-6-2012

TM200

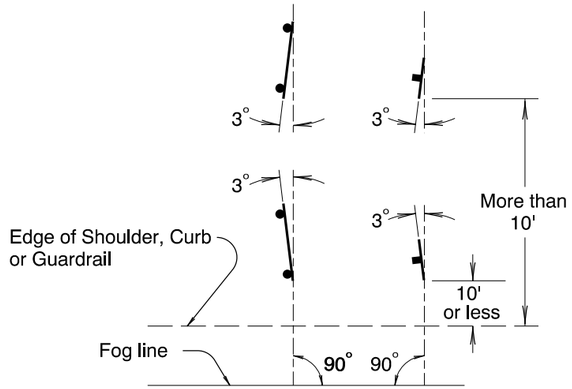

SIGN PLACEMENT

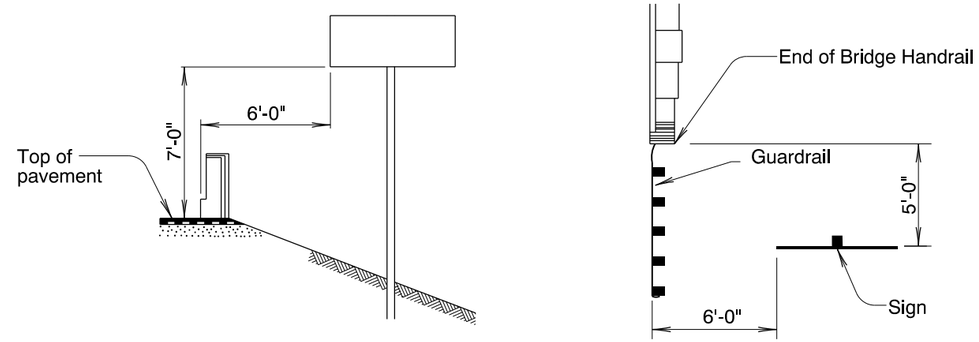

ELEVATION

PLAN

SIGN LOCATION FOR FREEWAY OVERCROSSING
(MINIMUM VALUES)

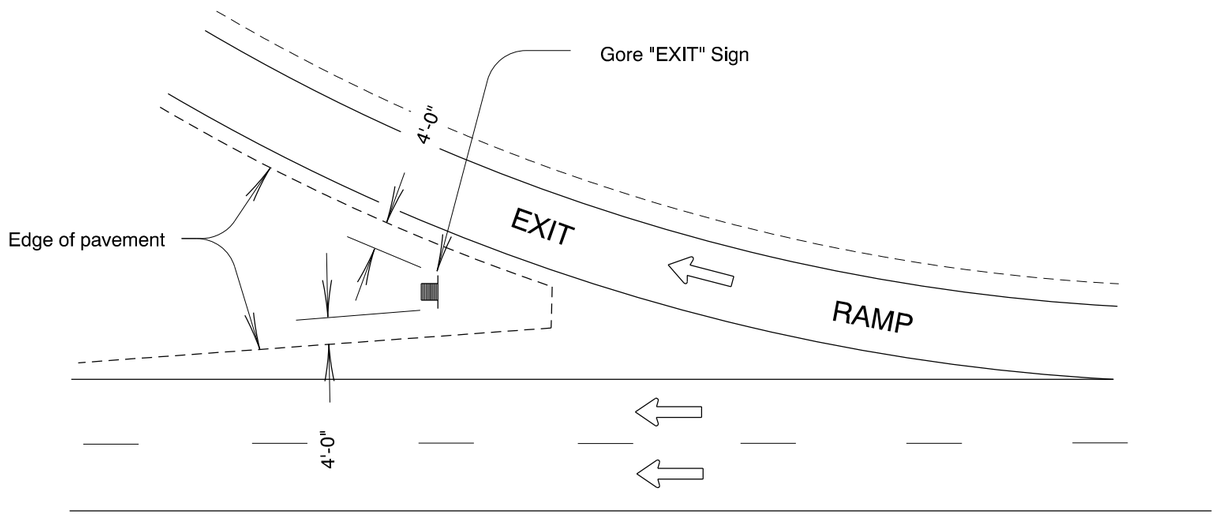

TYPICAL "EXIT" SIGN INSTALLATION

CALC. BOOK NO. N/A	BASELINE REPORT DATE 12-10-09
The selection and use of this Standard Drawing, while designed in accordance with generally accepted engineering principles and practices, is the sole responsibility of the user and should not be used without consulting a Registered Professional Engineer.	NOTE: All material and workmanship shall be in accordance with the current Oregon Standard Specifications
	OREGON STANDARD DRAWINGS MISCELLANEOUS SIGN PLACEMENT DETAILS 2015

DATE	REVISION DESCRIPTION

TM201.dgn 12-10-2009

TM201

TM212.dgn 1-6-2012

ROUTE SHIELDS

(for use as legend on Regulatory and Guide signs)

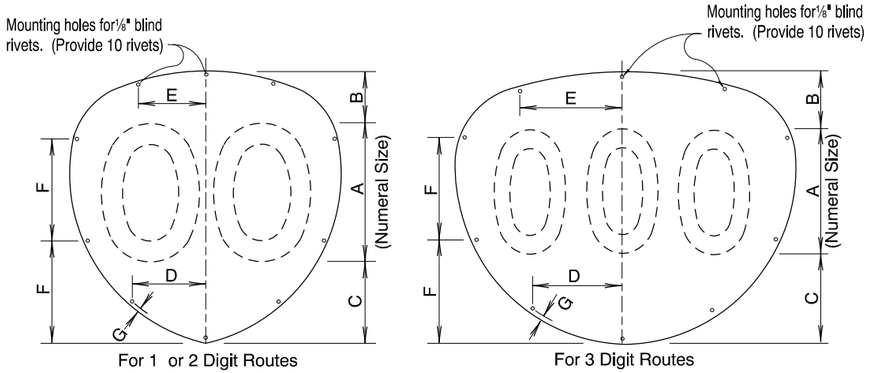

For 1 or 2 Digit Routes

For 3 Digit Routes

NOTE: Use sheet aluminum overlay with rivet holes for mounting on extruded aluminum panel signs.

TYPE "W1" or "W7"

SHIELD SIZE HEIGHT	SHIELD SIZE WIDTH	NO. OF DIGITS	A	B	C	D	E	F	G
18	18	1 or 2	9-C	3⅜	5⅝	4½	4½	6¾	⅜
18	22½	3*	8-C	3⅞	6⅛	6	6¾	6¾	⅜
24	24	1 or 2	12-C	4½	7½	6	6	9	½
24	30	3*	11-C	5	8	8	9	9	½
36	36	1 or 2	18-C	6¾	11¼	9	9	13½	¾
36	45	3*	16-C	7¾	12¼	12	13¾	13½	¾

* If at least 2 of the 3 digits are "1", then use shield size corresponding to a 2 digit number.

ROUTE SHIELD SIGNS

(for use in Junction, Directional, & Comfirmation Marker Assemblies)

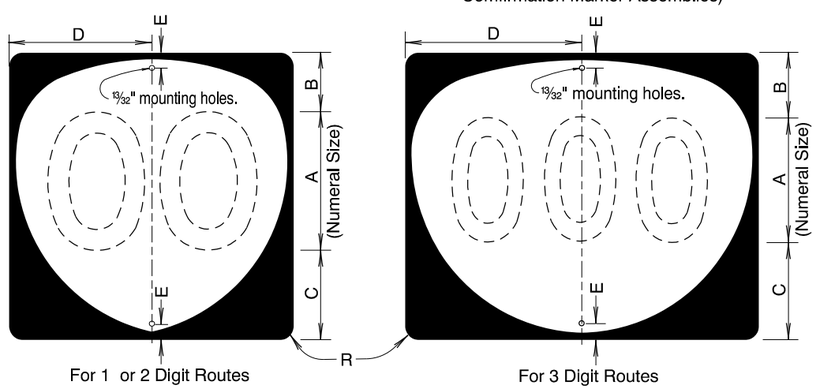

For 1 or 2 Digit Routes

For 3 Digit Routes

TYPE "W1" or "W7"

SIGN SIZE HEIGHT	SIGN SIZE WIDTH	NO. OF DIGITS	A	B	C	D	E	R
24	24	1 or 2	12-C	4½	7½	12	1¼	1½
24	30	3*	11-C	5	8	15	1¼	1½
36	36	1 or 2	18-C	6¾	11¼	18	1⅞	2¼
36	45	3*	16-C	7¾	12¼	22½	1⅞	2¼

* If at least 2 of the 3 digits are "1", then use shield size corresponding to a 2 digit number.

Notes: The Federal Highway Administrations standard rounded capital letter alphabets and letter spacing shall be used. The series for the numeral and the size and series for the letter suffix of the route number shall be as shown hereon. The letter shallbe placed beside the numerals.

All signs on this sheet shall be Type "W1" or "W7" as noted. Type "W7" shall be used for overhead installations. The Oregon Route Markers shall have non-reflectorized black letters, symbols and borders on a Silver-white ASTM Type III or Type IV retroreflective sheeting background (Type "W1") unless indicated otherwise on the plans.

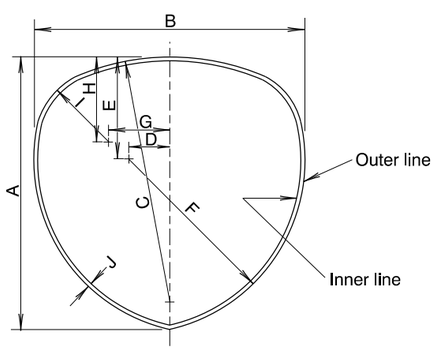

BASIC DESIGN

SIZE	A	B	C	D	E	F	G	H	I	J
18	18	18	16⅛	2⅝	6⅝	11⅝	4	5⅝	4⅞	⅜
18	18	22½	26 7/16	⅜	6⅜	11⅝	6 3/16	6	5 1/16	⅜
24	24	24	21½	3½	8⅞	15½	5⅜	7½	6½	½
24	24	30	35¼	½	8½	15½	8¼	8	6¾	½
36	36	36	32¼	5¼	13 5/16	23¼	8 1/16	11¼	9¾	¾
36	36	45	52⅞	¾	12¾	23¼	12⅜	12	10⅛	¾

Note: For Route Shield Signs used in Junction, Directional, and Marker assemblies, use inner line of Basic Design.
For Route Shields used as legend on Regulatory and Guide signs, use outer line of Basic Design.

CALC. BOOK NO. N/A

BASELINE REPORT DATE 01/06/2012

NOTE: All material and workmanship shall be in accordance with the current Oregon Standard Specifications

The selection and use of this Standard Drawing, while designed in accordance with generally accepted engineering principles and practices, is the sole responsibility of the user and should not be used without consulting a Registered Professional Engineer.

OREGON STANDARD DRAWINGS

SIGNING DETAILS
OREGON ROUTE SIGNS
2015

DATE	REVISION DESCRIPTION

TM212

E = BORDER WIDTH F = BORDER RADIUS

* = USE FOR TEXT INCLUDING LOWER-CASE g, j, p, q and y

	A	A*	B	C	D	E	F	G	G*
GROUND-MOUNTED SIGN (2-3 LANE HWYS)	12"	15"	6"	4"	2½"	1"	1½"	3"	5"
GROUND-MOUNTED SIGN (4+ LANES AND > 40 MPH)	15"	18"	8"	5"	3⅛"	1"	1½"	3½"	6"
GROUND-MOUNTED SIGN (LOCAL ROAD, 25 MPH OR LESS)	9"	12"	5"	3"	1⅞"	½"	1½"	2"	4"
MAST ARM MOUNTED SIGN (12" STANDARD)	21"	24"	12"	8"	5"	1"	3"	4½"	7½"
MAST ARM MOUNTED SIGN (10" ALTERNATE)	21"	21"	10"	6"	3¾"	1"	3"	5½"	7"
STACKED LEGEND SIGN (GROUND-MOUNTED)	21"	24"	6"	N/A	N/A	1"	3"	3"	4"
STACKED LEGEND SIGN (MAST ARM MOUNTED)	30"	33"	8"	5"	3⅛"	1"	3"	3½"	5"

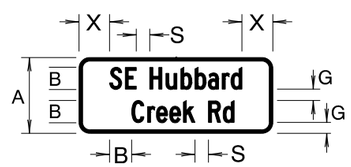

STACKED LEGEND FOR STREET NAME SIGN (GROUND-MOUNTED)

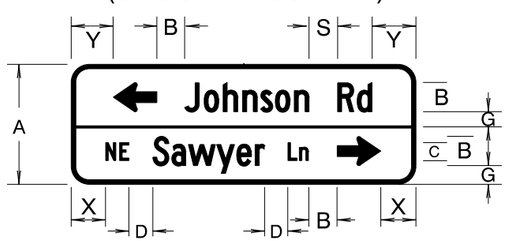

STACKED LEGEND FOR STREET NAME SIGN (MAST ARM MOUNTED)

Notes: If 12"C font on mast arm mounted sign yields signs larger than 21 square feet, the 10" Alternate may be used.

White border and legend on mast-arm signs are to be ASTM Type IX retroreflective sheeting. Borders shall be flush with edge of sign. Dividers, where used, shall be same width as border.

New Projects: Include mast-arm signs on Signing Plans.

Existing Poles: Perform pole analysis prior to adding or enlarging signs.

STREET NAME SIGN DETAILS

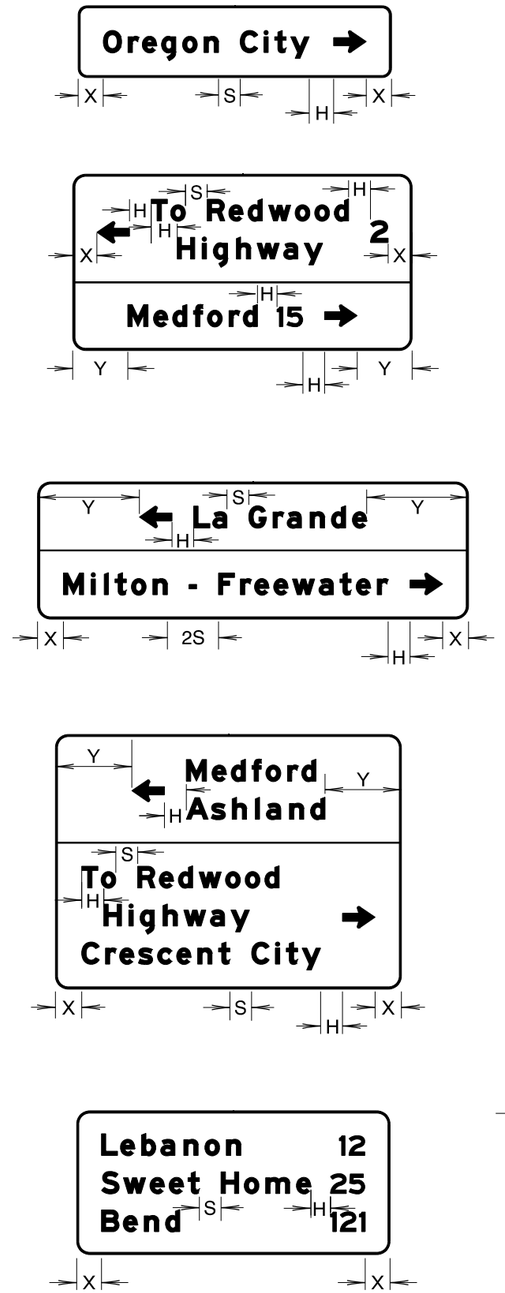

DIRECTIONAL SIGN DETAILS

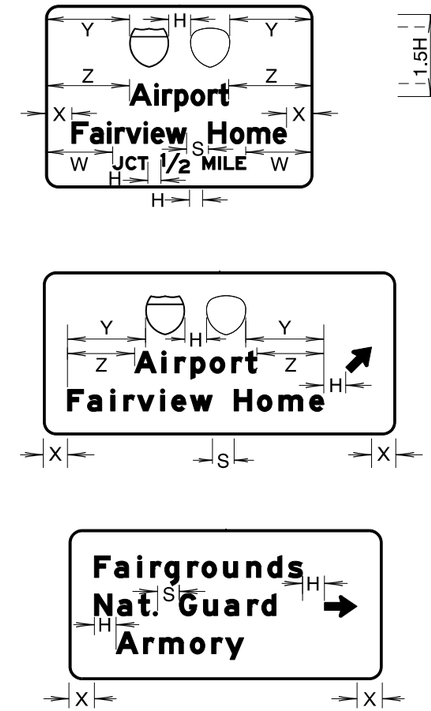

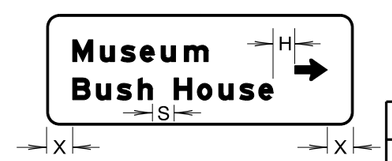

Vertically center arrow between lines of legend.

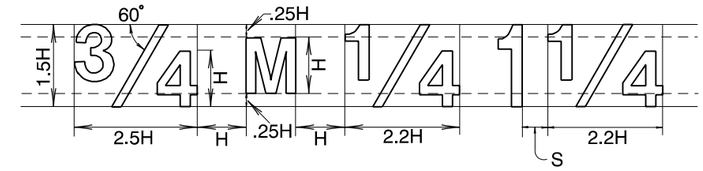

FRACTIONAL LAYOUT

SERIES (FONT)				
	B	C	D	E
S	.531 H	.625 H	.836 H	1.00 H

SPACING BETWEEN WORDS

H = Letter Height
S = Space between words
W,X,Y & Z = ½ of remaining space

X-Dimension should be approximately the same dimension as the letter Height (H). At a minimum the X-Dimension shall be no less than one-half the letter height (1/2 H)

Sign examples shown here are not drawn to scale, but to illustrate the layout of the legend items.

CALC. BOOK NO. N/A

BASELINE REPORT DATE 7/06/12

NOTE: All material and workmanship shall be in accordance with the current Oregon Standard Specifications

The selection and use of this Standard Drawing, while designed in accordance with generally accepted engineering principles and practices, is the sole responsibility of the user and should not be used without consulting a Registered Professional Engineer.

OREGON STANDARD DRAWINGS

CONVENTIONAL ROADS DIRECTIONAL SIGN LAYOUT STREET NAME SIGNS

2015

DATE	REVISION DESCRIPTION
01/16/15	Minor text change on two signs

TM223.dgn 7-6-2012

TM223

Note:

In severe wind areas the number of fasteners and mounting holes may be increased as directed by the Engineer.

Place holes for rivets a minimum of ¼" from outside of letter or numbers.

CALC. BOOK NO. N/A

BASELINE REPORT DATE 07-01-09

NOTE: All material and workmanship shall be in accordance with the current Oregon Standard Specifications

The selection and use of this Standard Drawing, while designed in accordance with generally accepted engineering principles and practices, is the sole responsibility of the user and should not be used without consulting a Registered Professional Engineer.

OREGON STANDARD DRAWINGS

MOUNTING DETAILS FOR REMOVABLE LEGEND 4" THROUGH 8" LETTERS & NUMBERS

2015

DATE	REVISION DESCRIPTION

TM230.dgn 7-1-2009

TM230

TM233.dgn 1-6-2012

TYPE "A-1"

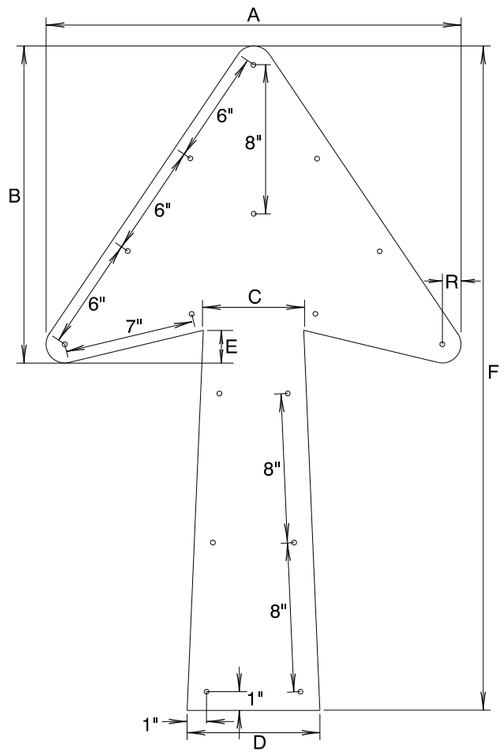

ARROW DIMENSIONS IN INCHES						
A	B	C	D	E	F	R
22¼	17	5⅜	7⅛	1¾	35⅝	1

TYPE "A-2"

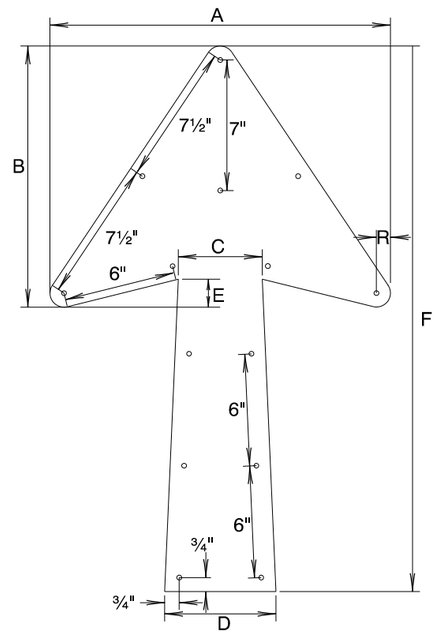

ARROW DIMENSIONS IN INCHES						
A	B	C	D	E	F	R
18¼	14	4½	6	1½	29¼	¾

TYPE "A-3"

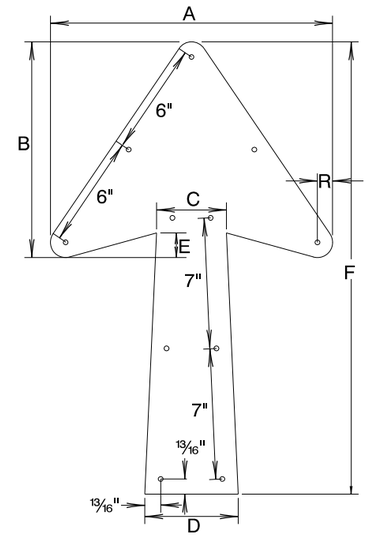

ARROW DIMENSIONS IN INCHES					
A	B	C	D	E	F	R
15⅛	11 9⁄16	3¾	5	1 5⁄16	24¼	1⁄16

TYPE "D"

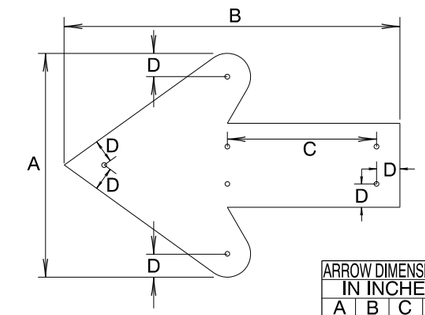

ARROW DIMENSIONS IN INCHES			
A	B	C	D
5	7	3¼	⅝
6	9	4	⅝
8	12	5½	⅝
10	16	7¾	⅝

"DOWN" ARROW

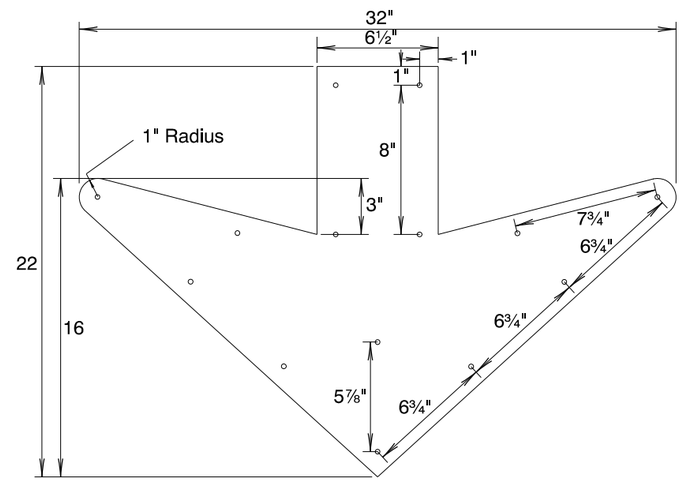

Note: In severe wind areas the number of fasteners and mounting holes may be increased as directed by the Engineer.

TYPE "B-1"

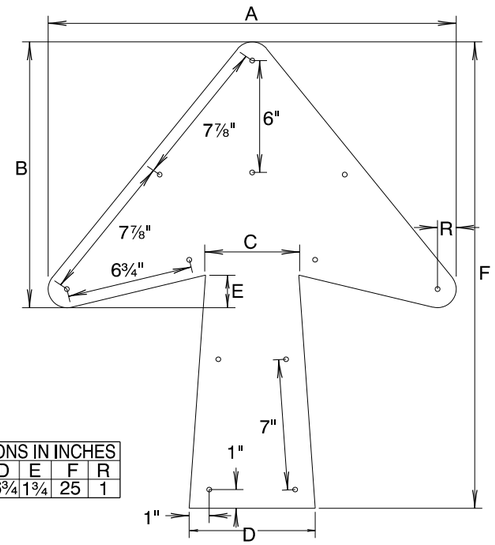

ARROW DIMENSIONS IN INCHES						
A	B	C	D	E	F	R
21⅞	14¼	5	6¾	1¾	25	1

TYPE "B-2"

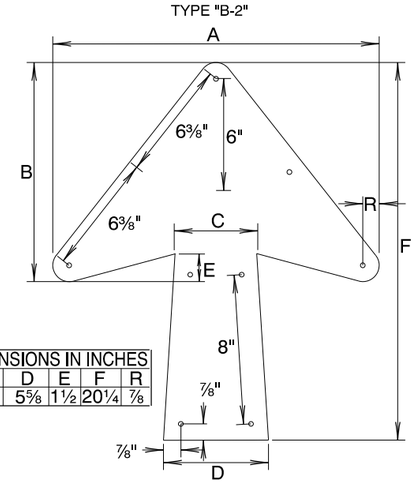

ARROW DIMENSIONS IN INCHES						
A	B	C	D	E	F	R
17½	11¾	4⅜	5⅝	1½	20¼	⅞

TYPE "B-3"

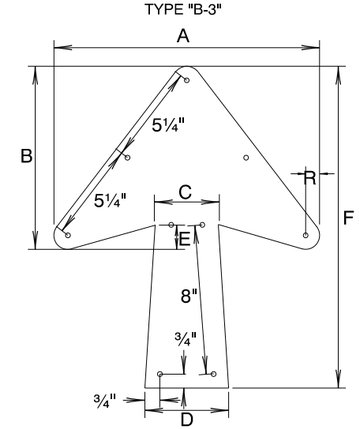

ARROW DIMENSIONS IN INCHES						
A	B	C	D	E	F	R
14¼	9 13⁄16	3⅜	4½	1 5⁄16	17¼	¾

CALC. BOOK NO. _____	BASELINE REPORT DATE 01/06/2012
	NOTE: All material and workmanship shall be in accordance with the current Oregon Standard Specifications

The selection and use of this Standard Drawing, while designed in accordance with generally accepted engineering principles and practices, is the sole responsibility of the user and should not be used without consulting a Registered Professional Engineer.

OREGON STANDARD DRAWINGS

MOUNTING DETAILS FOR REMOVABLE LEGEND VARIOUS ARROW SIZES

2015

DATE	REVISION DESCRIPTION

TM233

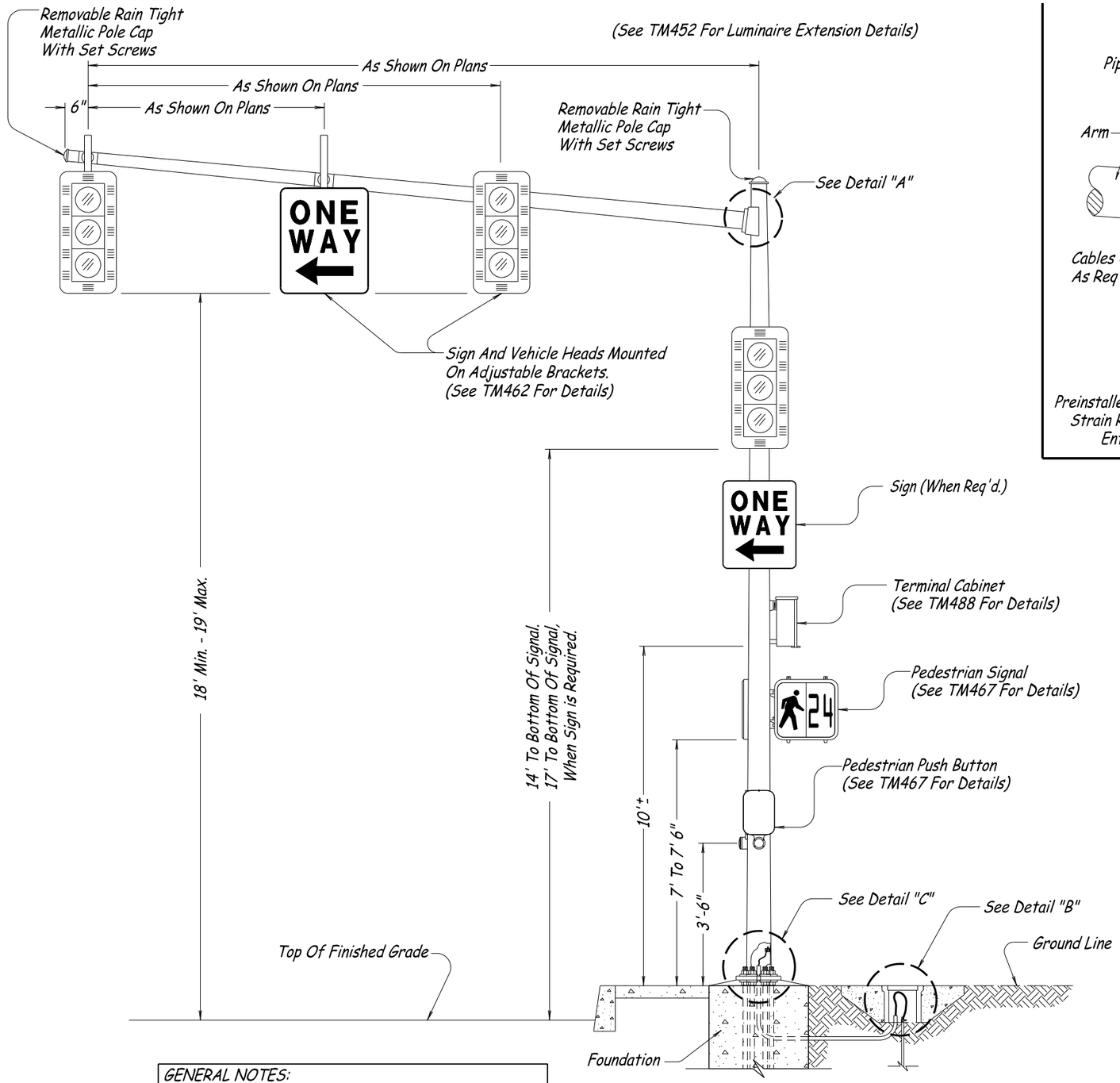

MAST ARM POLE

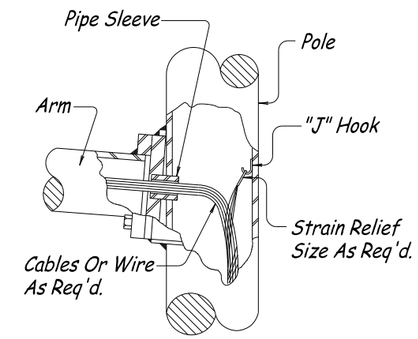

DETAIL "A"

Preinstalled "J" Hooks In Poles For Wire Compression Strain Relief Devices (Cable Grips) At All Access Entrances For Luminaire & Signal Arms.

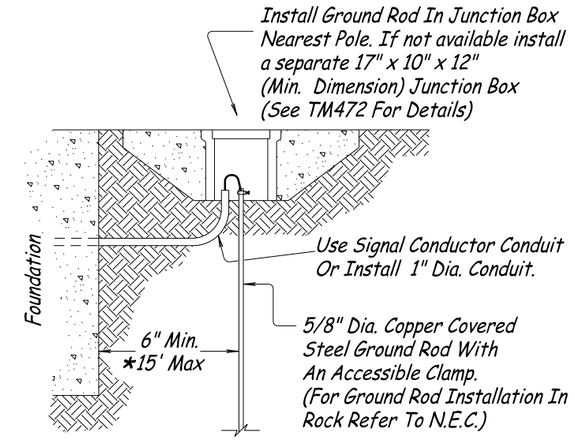

DETAIL "B"

*See Specifications For Structure Mounted Poles. 15' Max. Does Not Apply When Using The First Junction Box Nearest The Pole.

STANDARD GROUND ROD INSTALLATION DETAIL

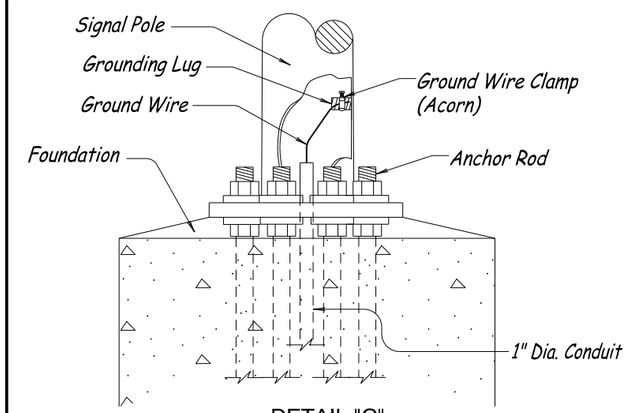

DETAIL "C"

INTERIOR GROUND DETAIL

GENERAL NOTES:

1. All Pole Entrances Containing Wiring Shall Be Smooth.
2. See TM462 For Adjustable Bracket Details.

NOTE:

All Bolts, Nuts And Washers Shall Be Stainless Steel Unless Noted Otherwise.

CALC. BOOK NO. N/A	BASELINE REPORT DATE 07-01-15
ACCOMPANIED BY BASELINE REPORT	NOTE: All material and workmanship shall be in accordance with the current Oregon Standard Specifications

The selection and use of this Standard Drawing, while designed in accordance with generally accepted engineering principles and practices, is the sole responsibility of the user and should not be used without consulting a Registered Professional Engineer.

OREGON STANDARD DRAWINGS

MAST ARM POLE DETAILS

2015

REVISIONS

DATE	DESCRIPTION
07-01-15	Changed Pedestrian Push Button from "H" Frame to Standard
---------	Pedestrian Push Button Station

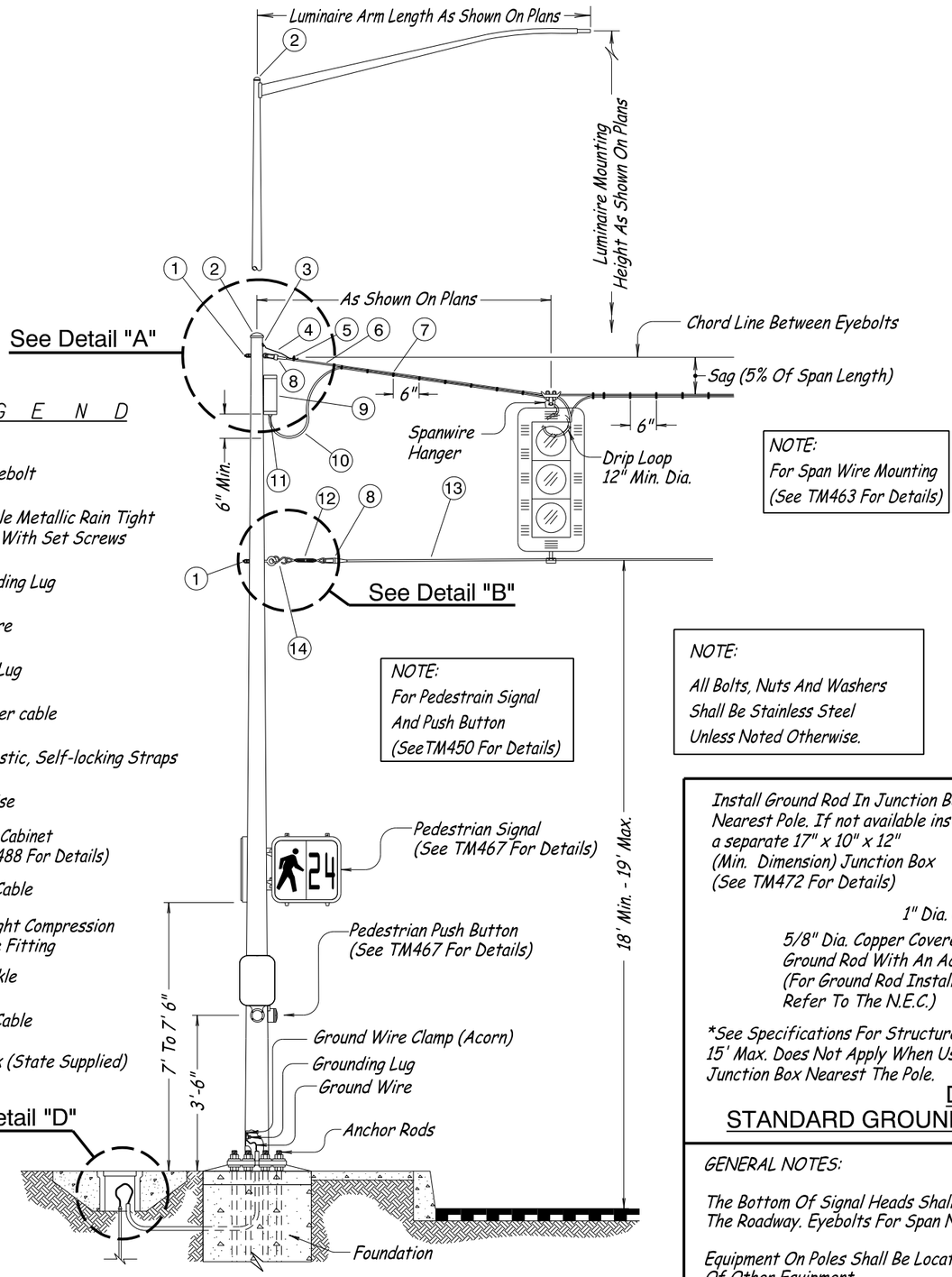

L E G E N D

1. Cable Eyebolt
2. Removable Metallic Rain Tight Pole Cap With Set Screws
3. Pole Bonding Lug
4. Bond Wire
5. Bonding Lug
6. Messenger cable
7. Black Plastic, Self-locking Straps
8. Strandvise
9. Terminal Cabinet (See TM488 For Details)
10. Control Cable
11. Watertight Compression Entrance Fitting
12. Turnbuckle
13. Tether Cable
14. "S" Hook (State Supplied)

NOTE:
For Span Wire Mounting
(See TM463 For Details)

NOTE:
For Pedestrain Signal
And Push Button
(See TM450 For Details)

NOTE:
All Bolts, Nuts And Washers
Shall Be Stainless Steel
Unless Noted Otherwise.

STRAIN POLE (Typical Curbed Section)

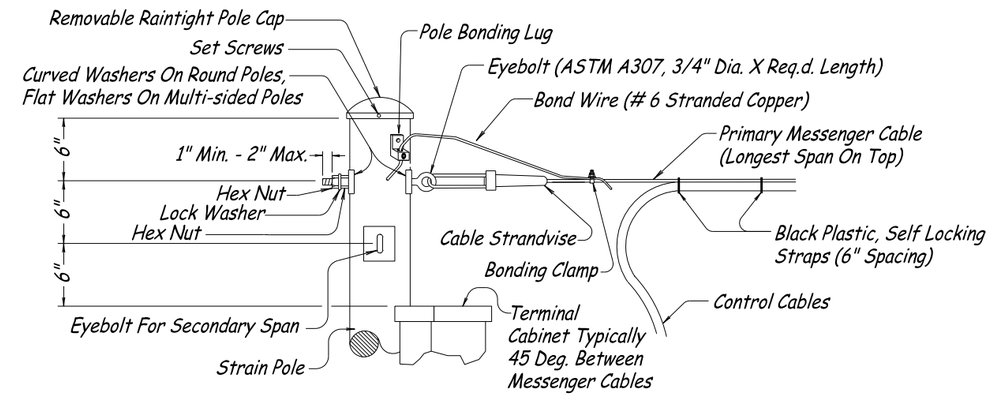

DETAIL "A"
MESSENGER CABLE CONNECTION

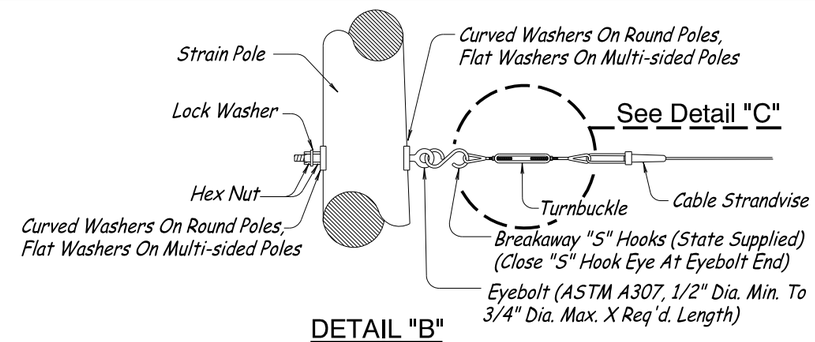

DETAIL "B"
TETHER CABLE CONNECTION TO POLE
(BOTH ENDS OF TETHER)

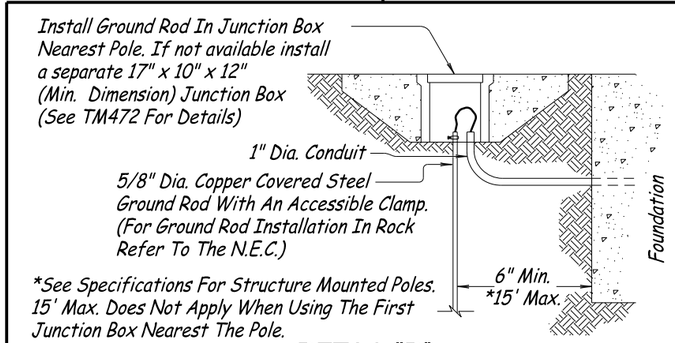

*See Specifications For Structure Mounted Poles. 15' Max. Does Not Apply When Using The First Junction Box Nearest The Pole.

DETAIL "D"
STANDARD GROUND ROD INSTALLATION DETAIL

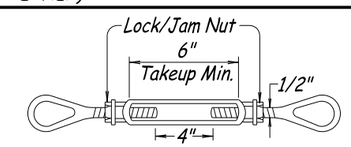

DETAIL "C"
TURNBUCKLE

Turnbuckles Shall Be Constructed Of Hot-Dipped Galvanized Steel With A Minimum Working Load Of 2,200 Lb.

GENERAL NOTES:

The Bottom Of Signal Heads Shall Be At The Same Vertical Elevation Above The Roadway. Eyebolts For Span Need Not Be At The Same Elevation.

Equipment On Poles Shall Be Located So As To Not Interfere With Installation Of Other Equipment.

All Pole Entrances Containing Wiring Shall Be Smooth.

CALC. BOOK NO. N/A

BASELINE REPORT DATE 07-01-15

ACCOMPANIED BY BASELINE REPORT

NOTE: All material and workmanship shall be in accordance with the current Oregon Standard Specifications

The selection and use of this Standard Drawing, while designed in accordance with generally accepted engineering principles and practices, is the sole responsibility of the user and should not be used without consulting a Registered Professional Engineer.

OREGON STANDARD DRAWINGS

STRAIN POLE DETAILS

2015

REVISIONS

DATE	DESCRIPTION
07-01-15	Changed Pedestrian Push Button from "H" Frame to Standard
---------	Pedestrian Push Button Station

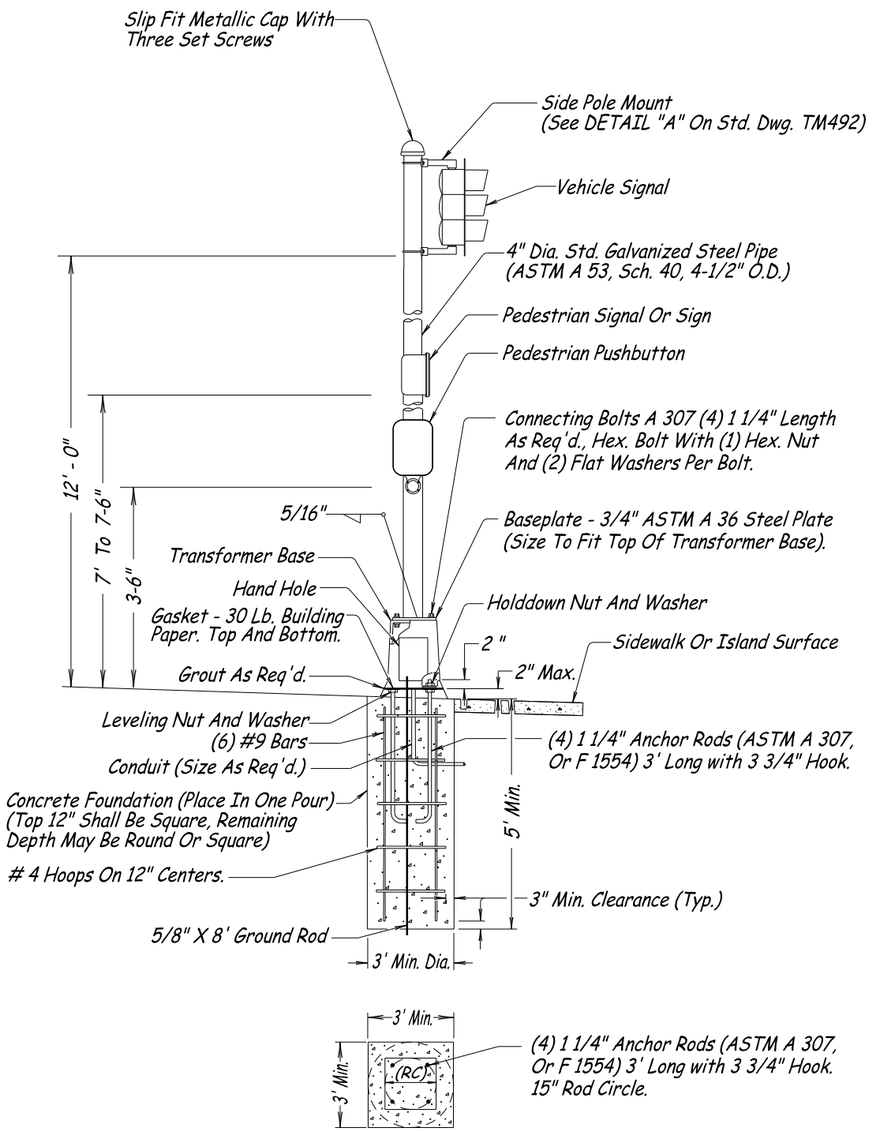

VEHICLE SIGNAL PEDESTAL

NOTE:

Flat Side Of Pedestal Base Can Be Lined Up With Back Of Sidewalk

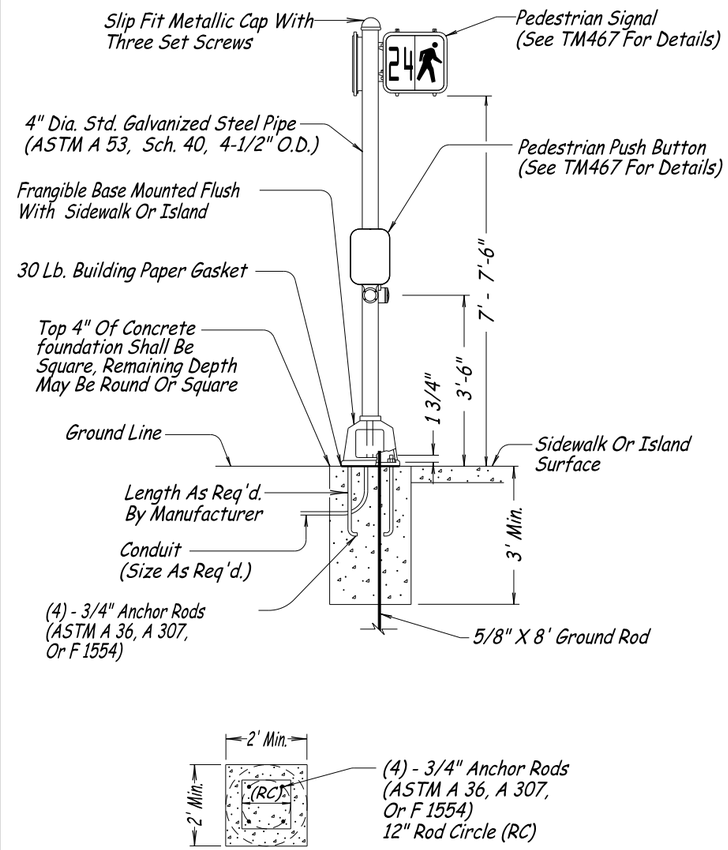

PEDESTRIAN SIGNAL PEDESTAL

GENERAL NOTES:

All Surface Joints Where Concrete And Aluminum Meet Shall Be Gasketed With 30 Lb. Building Paper

All Rods, Bolts, Nuts And Washers Shall Be Galvanized Steel Unless Noted Otherwise

All Pole Entrances Containing Wiring Shall Be Smooth

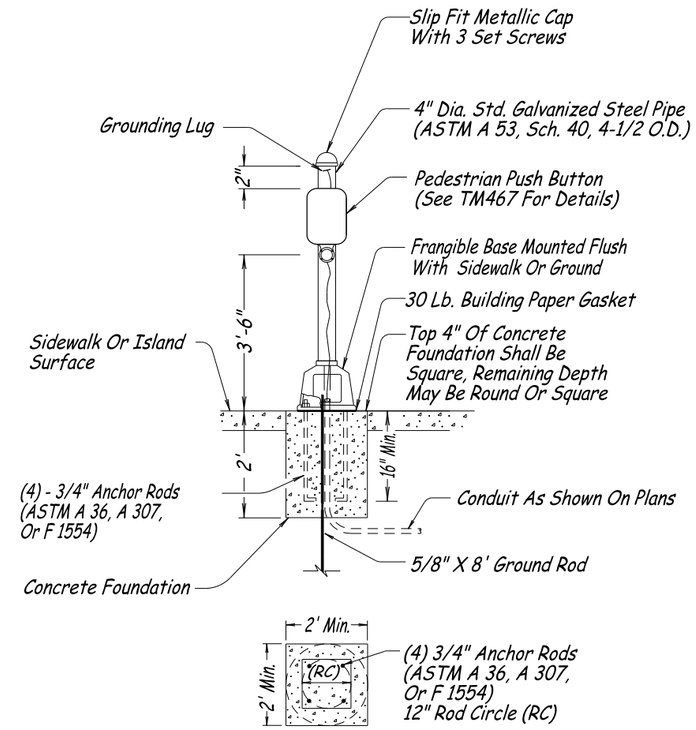

PEDESTRIAN OR BICYCLE PUSH BUTTON POST

CALC. BOOK NO. N/A	BASELINE REPORT DATE 07-01-15
ACCOMPANIED BY BASELINE REPORT	NOTE: All material and workmanship shall be in accordance with the current Oregon Standard Specifications

The selection and use of this Standard Drawing, while designed in accordance with generally accepted engineering principles and practices, is the sole responsibility of the user and should not be used without consulting a Registered Professional Engineer.

OREGON STANDARD DRAWINGS

VEHICLE, PEDESTRIAN SIGNAL AND PUSHBUTTON MOUNTING OPTION DETAILS

2015

REVISIONS

DATE	DESCRIPTION
07-01-15	Changed Pedestrian Push Button from "H" Frame to Standard
---------	Pedestrian Push Button Station

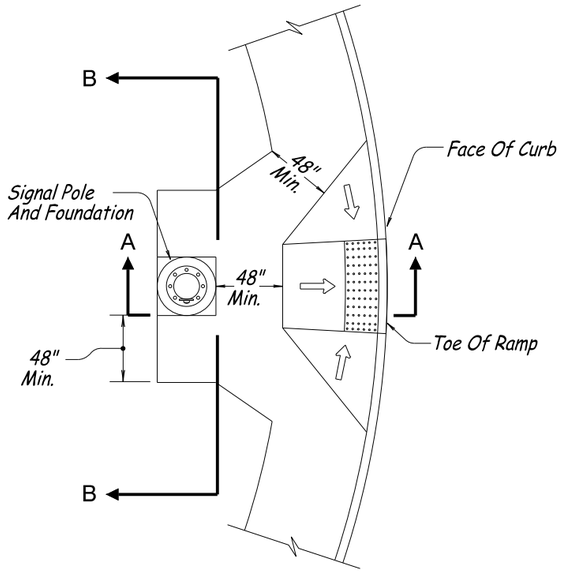

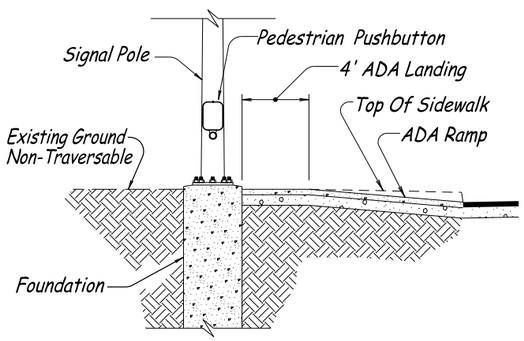

SECTION A-A

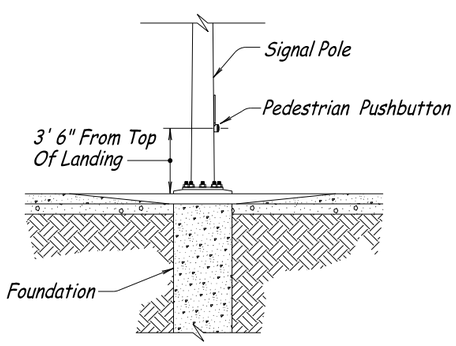

SECTION B-B

SIGNAL POLE AT PERPENDICULAR SIDEWALK RAMP

✱ 24" From Face Of Curb To Face Of Pedestrian Pushbutton

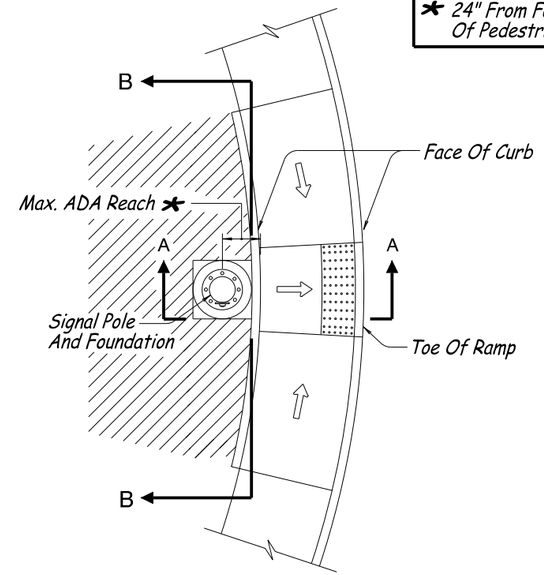

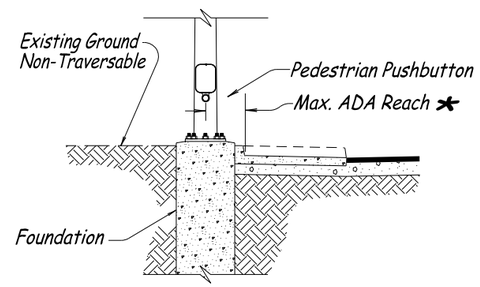

SECTION A-A

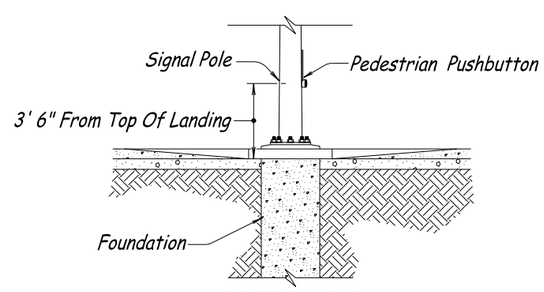

SECTION B-B

SIGNAL POLE AT PARALLEL SIDEWALK RAMP

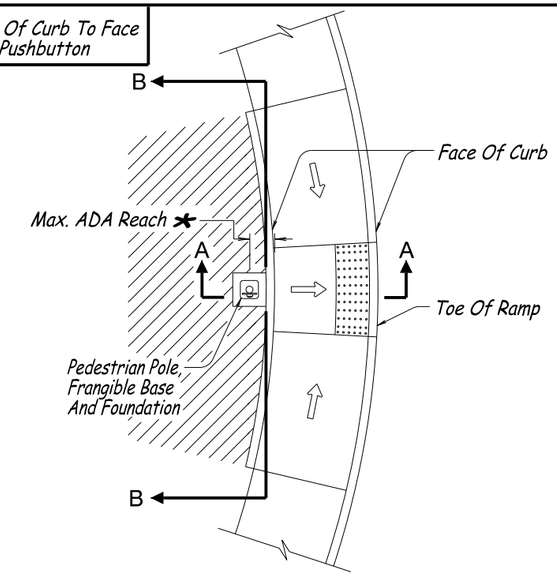

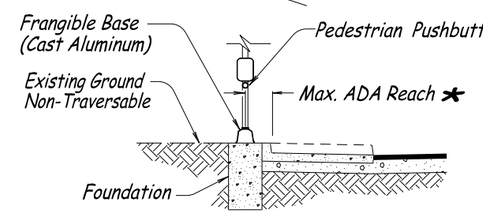

SECTION A-A

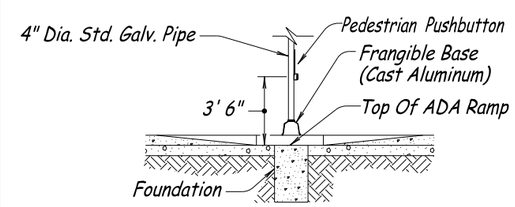

SECTION B-B

PEDESTRIAN SIGNAL PEDESTAL AT PARALLEL RAMP

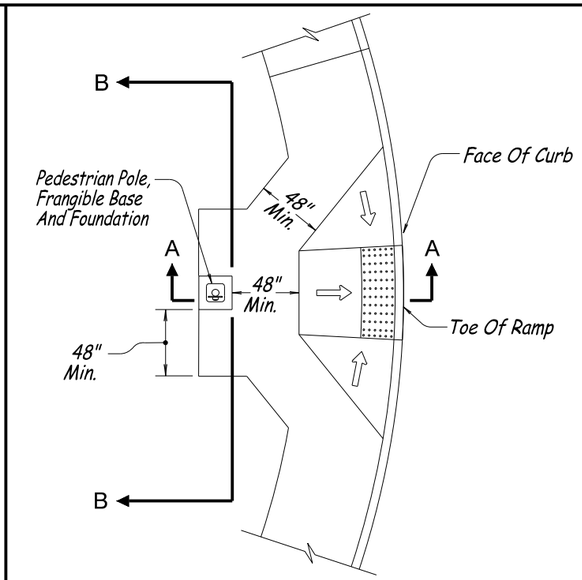

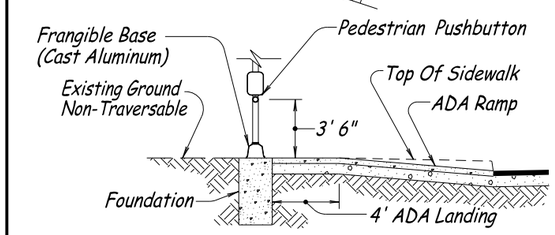

SECTION A-A

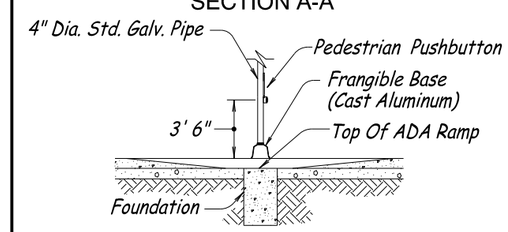

SECTION B-B

PEDESTRIAN SIGNAL PEDESTAL AT PERPENDICULAR RAMP

⇦ Direction Of Slope

Area Shown Hatched Shall NOT Be Paved.

NOTES:

1) Square Top Of Signal Pole Foundation Can Be Rotated To Match Back Of Walk.

2) For Signal Pole And Pedestrain Pole Details Not Shown See TM450, TM457, TM467 And TM650 Thru TM653.

3) For ADA Ramp Details Not Shown See RD755

CALC. BOOK NO. N/A

BASELINE REPORT DATE 07-01-15

ACCOMPANIED BY BASELINE REPORT

NOTE: All material and workmanship shall be in accordance with the current Oregon Standard Specifications

The selection and use of this Standard Drawing, while designed in accordance with generally accepted engineering principles and practices, is the sole responsibility of the user and should not be used without consulting a Registered Professional Engineer.

OREGON STANDARD DRAWINGS

PEDESTRIAN RAMP PLACEMENT DETAILS

2015

REVISIONS

DATE	DESCRIPTION
07-01-15	Changed Pedestrian Push Button from "H" Frame to Standard
---------	Pedestrian Push Button Station

TYPE 1R
Lens Arrangemnet "Single" Flashing Vehicle Signal

TYPE 1Y
Lens Arrangemnet "Single" Flashing Vehicle Signal

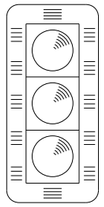

TYPE 2
Lens Arrangemnet "In Line" Standard Vehicle Signal

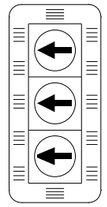

TYPE 3L
Lens Arrangement "In Line" Protected Left Turn Signal

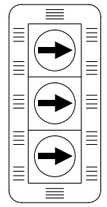

TYPE 3R
Lens Arrangement "In Line" Protected Right Turn Signal

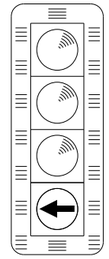

TYPE 4
Lens Arrangement "In Line" Left Turn/Through (Used For Split Phase)

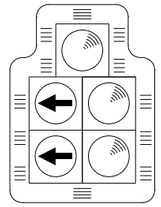

TYPE 4L
Lens Arrangement "Doghouse" Left Turn Protected / Permitted

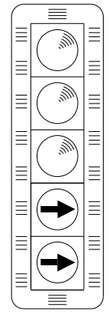

TYPE 5
Lens Arrangement "In Line" Right Turn Protected / Permitted

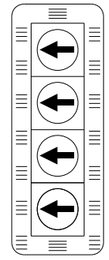

TYPE 6L
Lens Arrangement "In Line" Left Turn Protected / Permitted

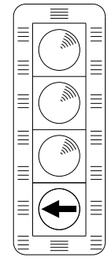

TYPE 7
Lens Arrangement "In Line" Left Turn/Through (Used For Rail Preemption Only)

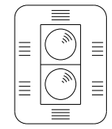

TYPE 8
Lens Arrangement "In Line" (Ramp Meter Only)

Color Indication And Nominal Lens Size:	
R	Red Circular
Y	Yellow Circular
G	Green Circular
RLTA	Red Left Turn Arrow
YLTA	Yellow Left Turn Arrow
GLTA	Green Left Turn Arrow
RRTA	Red Right Turn Arrow
YRTA	Yellow Right Turn Arrow
GRTA	Green Right Turn Arrow
FYLTA	Flashing Yellow Left Turn Arrow
GTA	Green Through Arrow
FR	Flashing Red Circular
FY	Flashing Yellow Circular

1R	1Y	2	3L	3R	4	4L		5	6L	7	8	9	10	
12" FR	12" FY	12" R	12" RLTA	12" RRTA	12" R	12" R		12" R	12" RLTA	12" R	8" R	12" R	12" R	12" R
		12" Y	12" YLTA	12" YRTA	12" Y	12" YLTA	12" Y	12" Y	12" YLTA	12" Y	8" G	12" Y		12" Y
		12" G	12" GLTA	12" GRTA	12" G	12" GLTA	12" G	12" G	12" FYLTA	12" G		12" GTA		
					12" GLTA			12" YRTA	12" GLTA	12" GLTA		12" GLTA		
								12" GRTA						

VEHICLE SIGNAL HEAD DESIGNATIONS

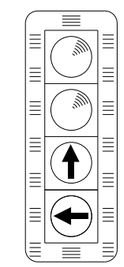

TYPE 9
Lens Arrangement "In Line" Left Turn/Through Arrow (Used When There Is A Dual Left /Through)

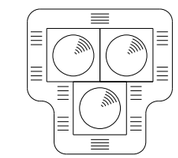

TYPE 10
Lens Arrangement "PHB" Stop / Stop Yellow

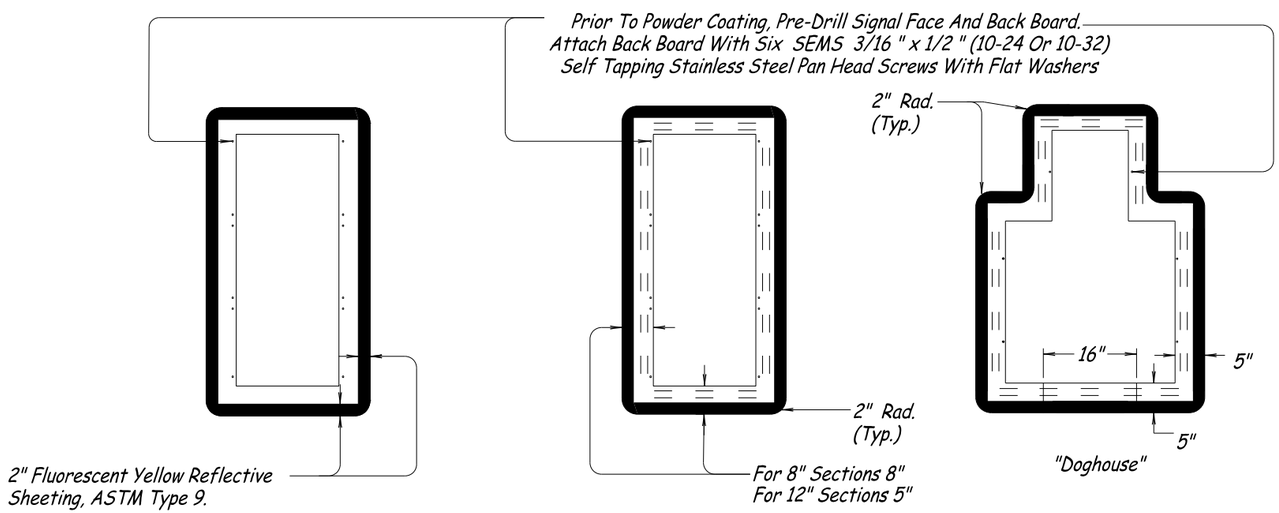

FOR 8" & 12"

FOR 12" FIVE-SECTION HEADS

B A C K B O A R D S

CALC. BOOK NO. N/A

BASELINE REPORT DATE 07-01-14

ACCOMPANIED BY BASELINE REPORT

NOTE: All material and workmanship shall be in accordance with the current Oregon Standard Specifications

The selection and use of this Standard Drawing, while designed in accordance with generally accepted engineering principles and practices, is the sole responsibility of the user and should not be used without consulting a Registered Professional Engineer.

OREGON STANDARD DRAWINGS

VEHICLE SIGNAL DETAILS

2015

REVISIONS

DATE	DESCRIPTION

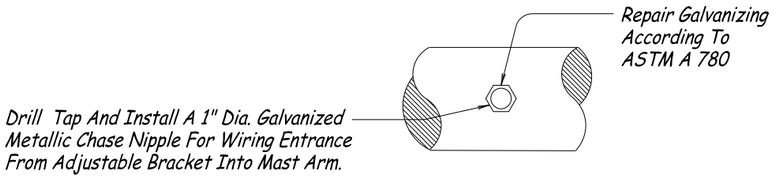

MAST ARM INSTALLATION OF ADJUSTABLE BRACKET

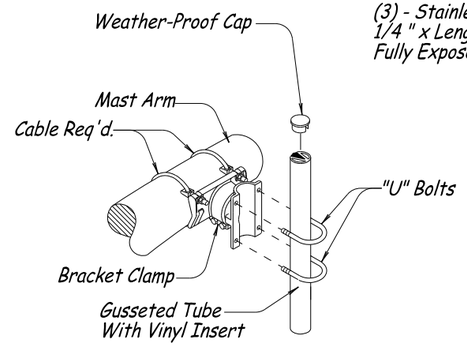

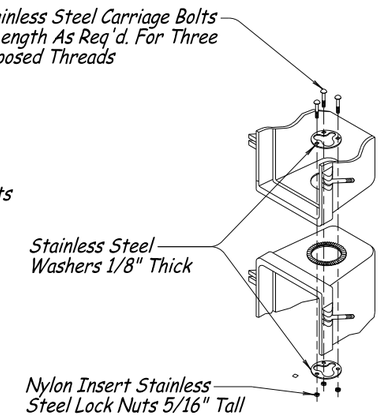

VEHICLE HEAD ASSEMBLY

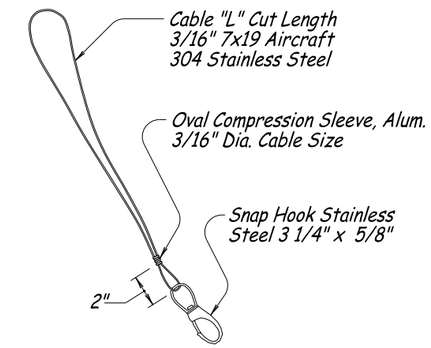

SAFETY CABLE

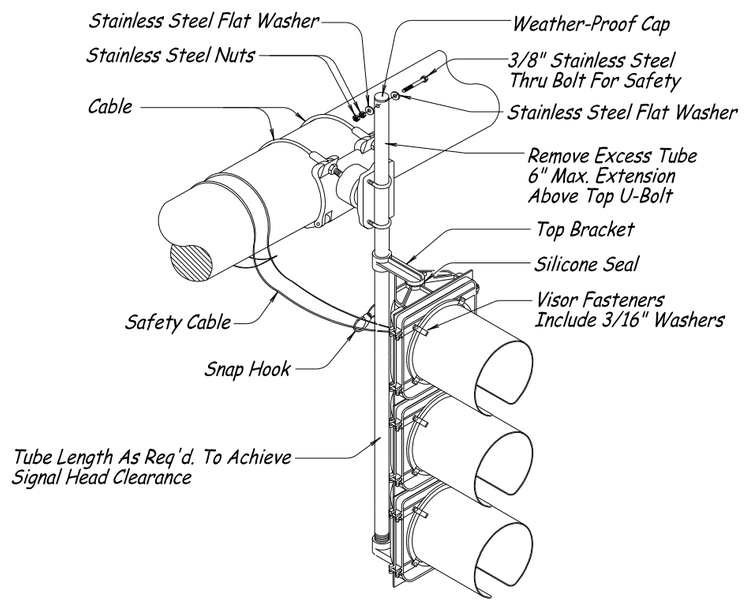

MOUNTING ABOVE BRACKET ARMS

NOTE:

This Detail Can Be Applied To Any Signal Head Configuration. If The Extension Between The Center Line Of The Mast Arm And The Top Bracket Exceeds 18" Consult Engineer For Guidance.

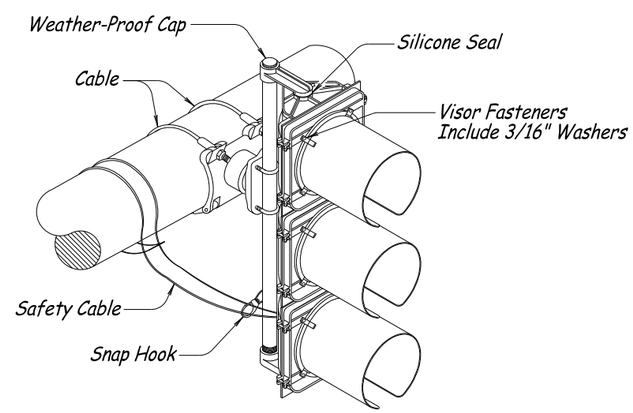

MOUNTING BETWEEN BRACKET ARMS

NOTE:

All Bolts, Nuts And Washers Shall Be Stainless Steel Unless Noted Otherwise.

See TM465 For Sign Mount Detail.

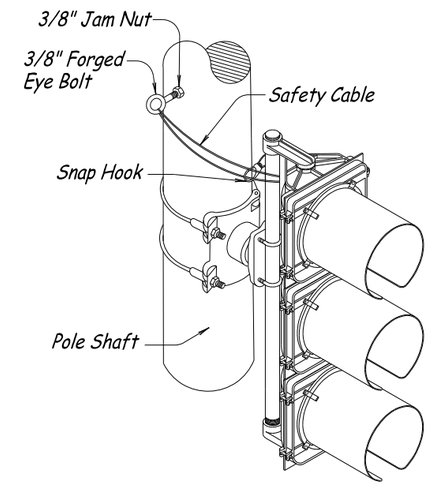

SIGNAL HEAD MOUNTING ON POLE SHAFT

Note:
Drill And Tap Pole For 3/8" Forged Eye Bolt.

CALC. BOOK NO. N/A	BASELINE REPORT DATE 12-31-12
ACCOMPANIED BY BASELINE REPORT	NOTE: All material and workmanship shall be in accordance with the current Oregon Standard Specifications

The selection and use of this Standard Drawing, while designed in accordance with generally accepted engineering principles and practices, is the sole responsibility of the user and should not be used without consulting a Registered Professional Engineer.

OREGON STANDARD DRAWINGS

ADJUSTABLE SIGNAL HEAD MOUNTING DETAILS

2015

REVISIONS

DATE	DESCRIPTION

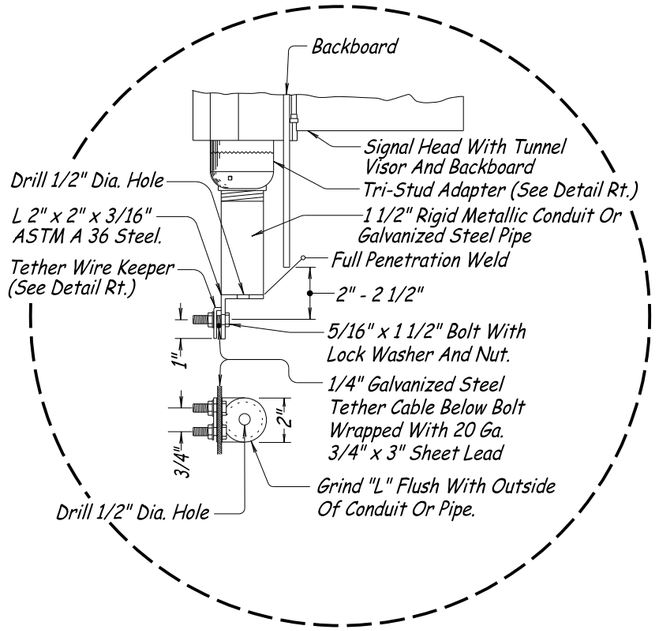

TETHER CLAMP ASSEMBLY FOR SIGNALS OR SIGNS

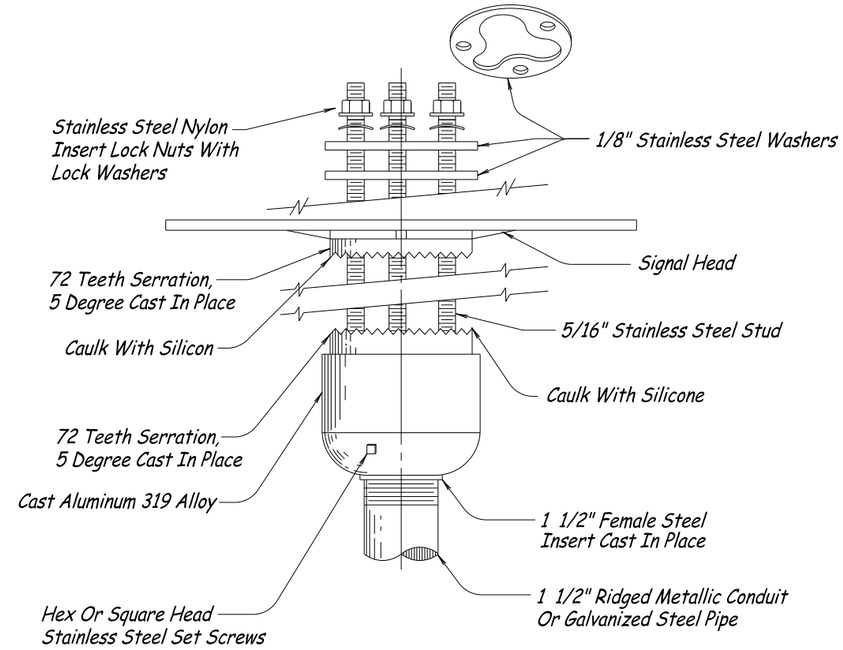

TRI-STUD ADAPTER DETAIL

(Bottom Attachment Shown, Rotate 180 Degrees For Top Attachment)

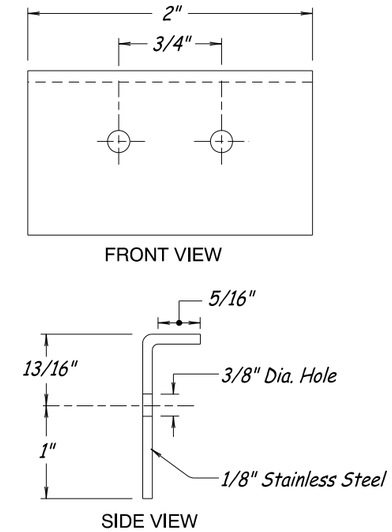

TETHER WIRE KEEPER DETAIL

GENERAL NOTES:

Galvanize All Steel Parts After Fabrication.

All Bolts, Nuts And Washers Shall Be Stainless Steel Unless Noted Otherwise.

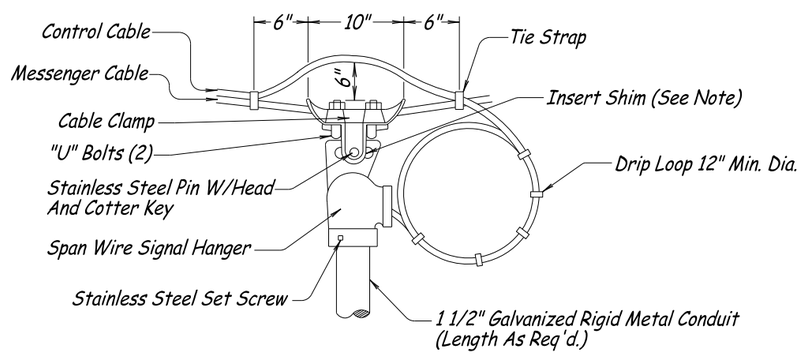

GENERAL NOTES:

All Set Screws Shall Be Drilled And Tapped Through The First Wall Of Conduit. Set Screw Shall Not Extend More Than 5/8 " Inside Conduit And Be Installed With Anti-Seize Compound.

Threaded End Of Conduit Shall Extend A Minimum Of 5/8" Into Span Wire Signal Hanger.

(Install Shim Between Cable Clamp And Span Wire Hanger To Eliminate Excess Movement Yet Allow For Moderate Sway.)

"U" Bolts, Bolts, Pins, Nuts And Washers Shall Be Stainless Steel.

MESSENGER CABLE ATTACHMENT

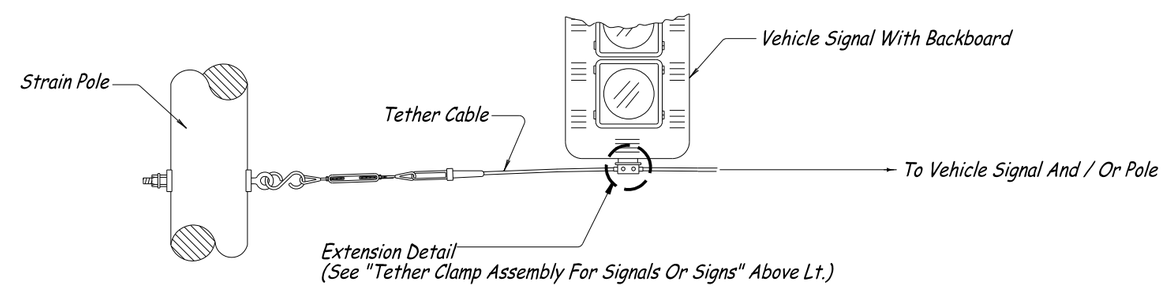

TETHER CABLE CONNECTION DETAIL

CALC. BOOK NO. N/A	BASELINE REPORT DATE 01-03-14
ACCOMPANIED BY BASELINE REPORT	NOTE: All material and workmanship shall be in accordance with the current Oregon Standard Specifications
The selection and use of this Standard Drawing, while designed in accordance with generally accepted engineering principles and practices, is the sole responsibility of the user and should not be used without consulting a Registered Professional Engineer.	OREGON STANDARD DRAWINGS SPANWIRE MOUNTING DETAILS 2015

REVISIONS

DATE	DESCRIPTION

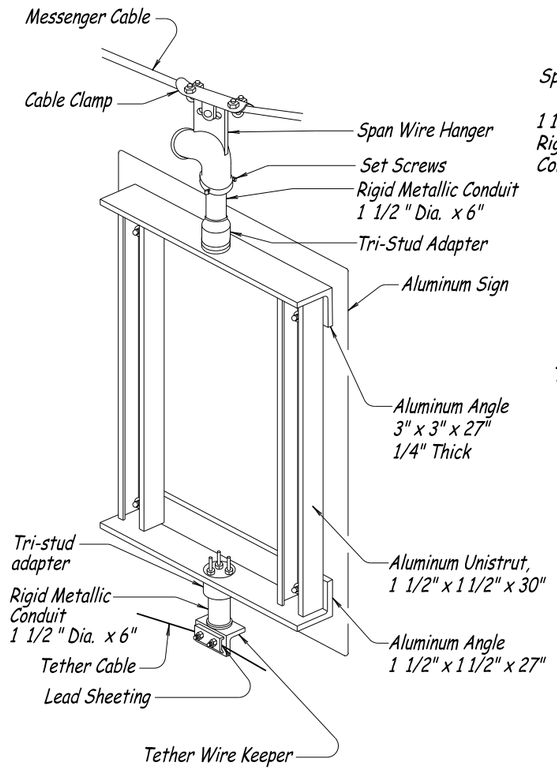

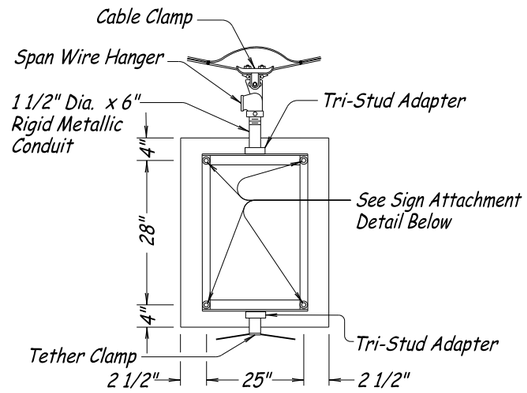

NOTE:

All Bolts, Nuts And Washers Shall Be Stainless Steel Unless Noted Otherwise.

SPANWIRE MOUNTED ALUMINUM SIGNS

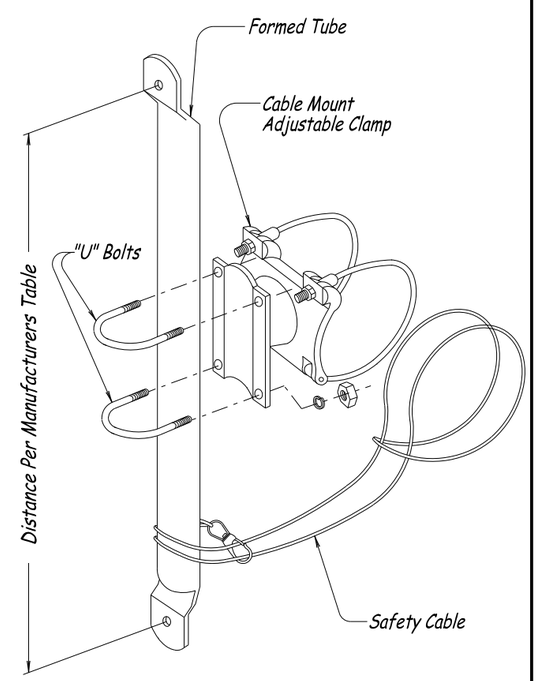

NOTE:
See TM462 For Signal Mounting Details

ADJUSTABLE BRACKET SIGN MOUNT WITH FORMED TUBE

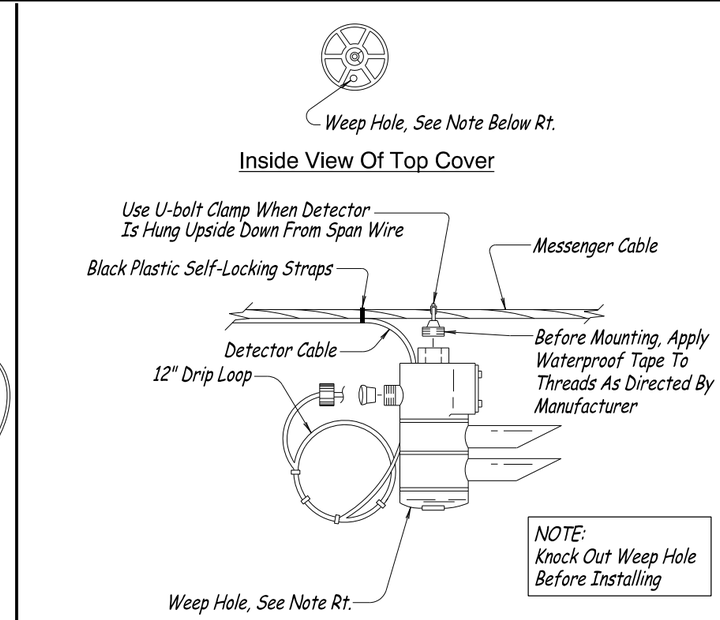

SPAN WIRE INSTALLATION

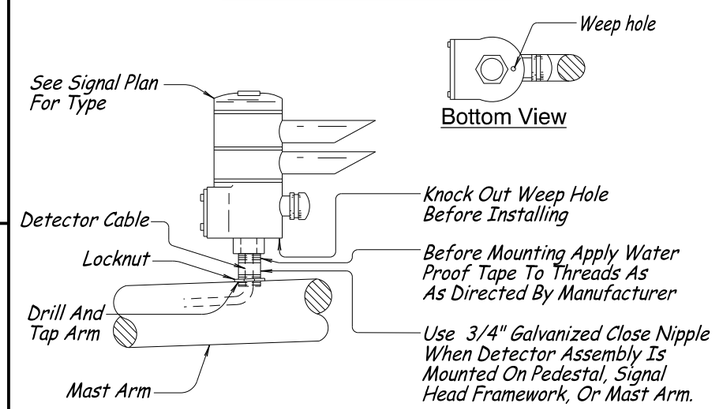

MAST ARM MOUNTING

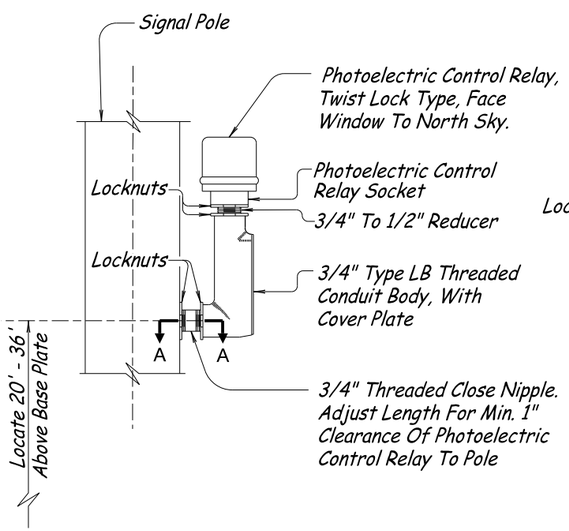

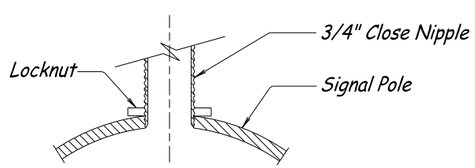

Section A-A

PHOTOELECTRIC CONTROL INSTALLATION FOR SIGNAL POLE

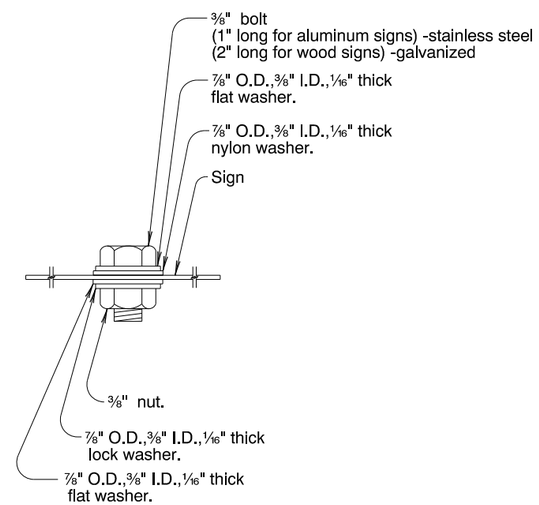

SIGN ATTACHMENT DETAIL

CALC. BOOK NO. N/A	BASELINE REPORT DATE 07-01-14
ACCOMPANIED BY BASELINE REPORT	NOTE: All material and workmanship shall be in accordance with the current Oregon Standard Specifications
The selection and use of this Standard Drawing, while designed in accordance with generally accepted engineering principles and practices, is the sole responsibility of the user and should not be used without consulting a Registered Professional Engineer.	OREGON STANDARD DRAWINGS OVERHEAD SIGN, FIRE PREEMPTION AND PHOTOELECTRIC CONTROL DETAILS 2015

REVISIONS

DATE	DESCRIPTION

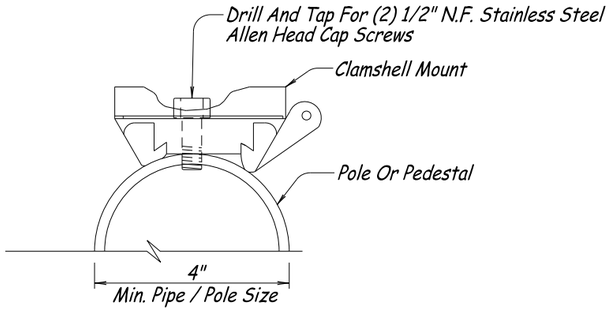

SECTION A-A

NOTES:

1. Where Two Heads Are Side Mounted On 4" Conduit, Proper Clearance Shall Be Maintained To Allow Legend To Be Fully Visible.
2. Clam Shells To Be Orientated So That The Heads Can Be Opened For Maintenance. (Verify Hinge Placement Of Clamshell).

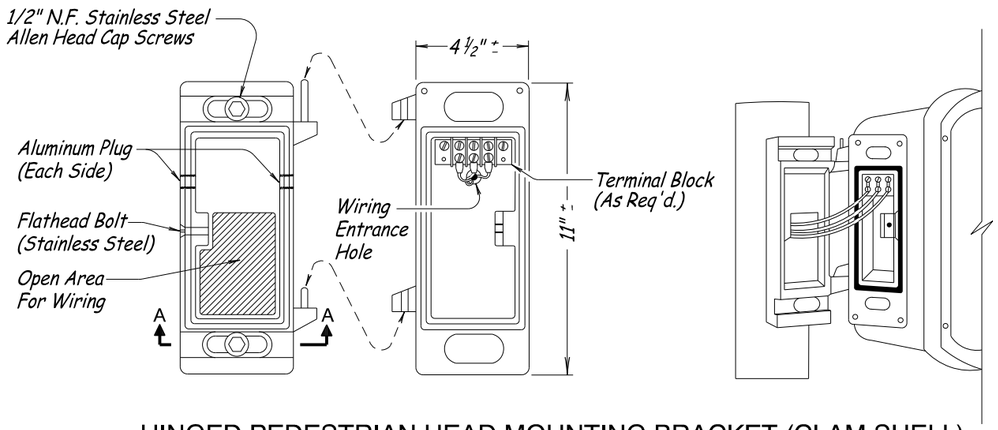

HINGED PEDESTRIAN HEAD MOUNTING BRACKET (CLAM SHELL)

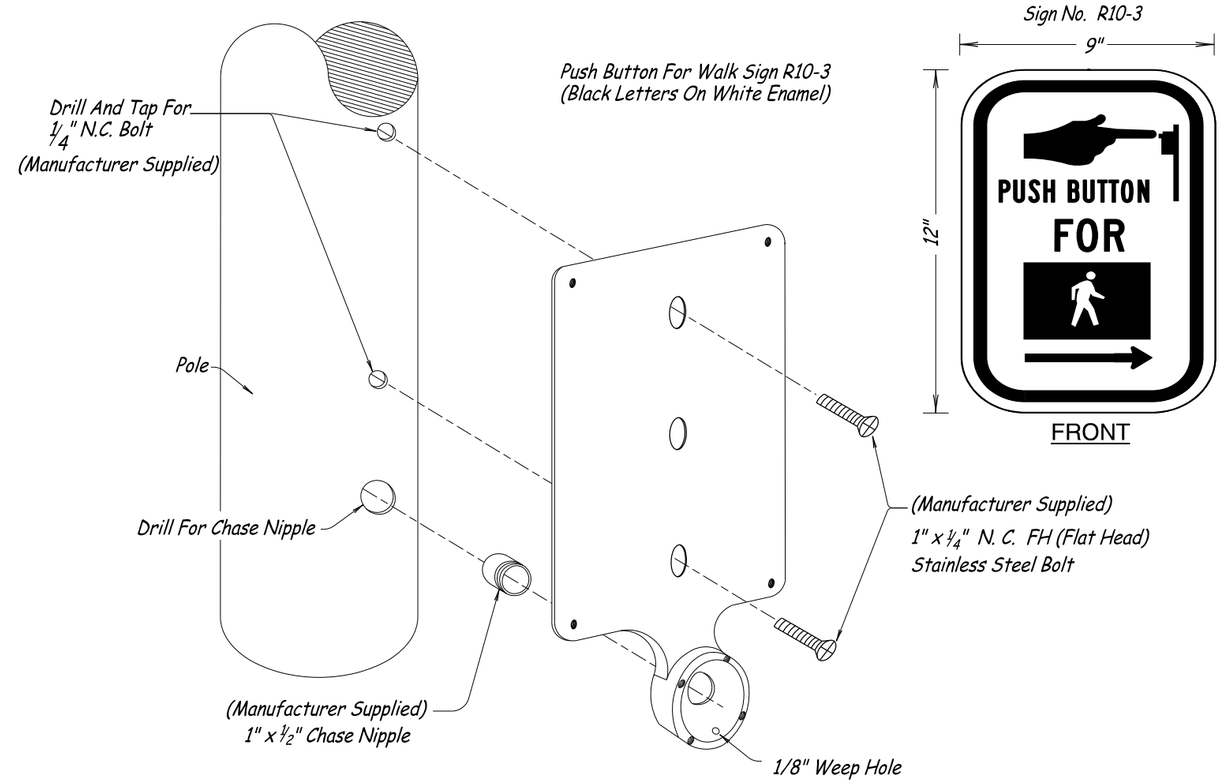

STANDARD PUSH BUTTON STATION AND INSTRUCTION SIGN

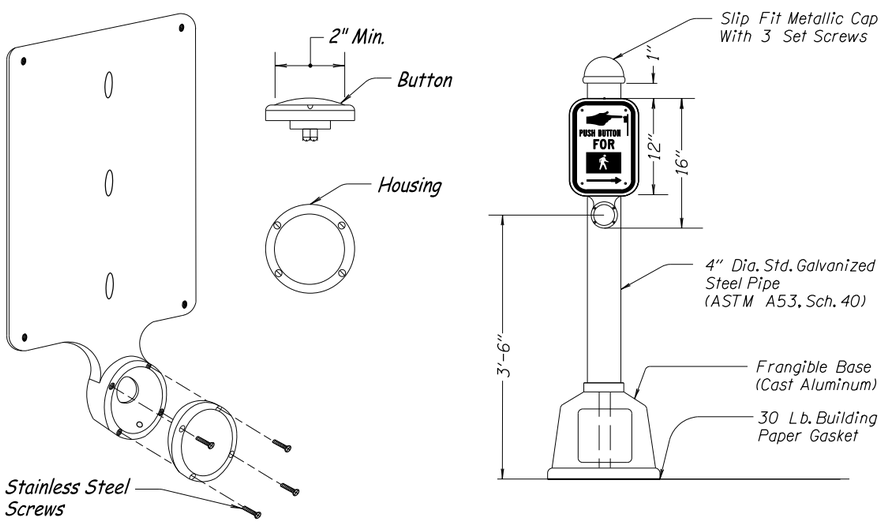

STANDARD PUSH BUTTON

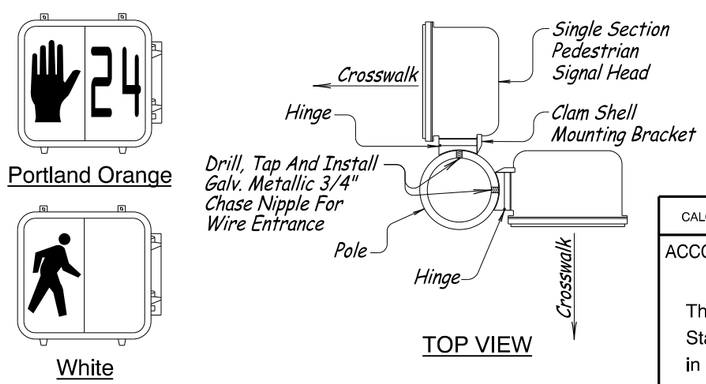

CLAM SHELL ORIENTATION

GENRAL NOTES:

All surface joints where concrete and aluminum meet shall be gasketed with 30 Lb. building paper.

All bolts, nuts and washers shall be stainless steel unless noted otherwise.

CALC. BOOK NO. N/A	BASELINE REPORT DATE 07-01-15
ACCOMPANIED BY BASELINE REPORT	NOTE: All material and workmanship shall be in accordance with the current Oregon Standard Specifications

The selection and use of this Standard Drawing, while designed in accordance with generally accepted engineering principles and practices, is the sole responsibility of the user and should not be used without consulting a Registered Professional Engineer.

OREGON STANDARD DRAWINGS
PEDESTRIAN SIGNAL AND PEDESTRIAN PUSH BUTTON DETAILS
2015

REVISIONS

DATE	DESCRIPTION
07-01-15	Changed the "H" Frame Pedestrian Push Button Station
---------	to a Standard Pedestrian Push Button Station

COLOR CODE CHART
SINGLE CONDUCTOR

PHASE	FUNCTION	BASE COLOR	FIRST TRACER	SECOND TRACER
2	RED	RED	—	—
2	YELLOW	YELLOW	—	—
2	GREEN	GREEN	—	—
2S	SPARE RED	RED	GREY	—
2S	SPARE YELLOW	YELLOW	GREY	—
2S	SPARE GREEN	GREEN	GREY	—
2	WALK	BLACK	WHITE	—
2	DONT WALK	BLUE	BLACK	—
6	RED	PINK	—	—
6	YELLOW	ORANGE	—	—
6	GREEN	GREY	—	—
6S	SPARE RED	PINK	YELLOW	—
6S	SPARE YELLOW	ORANGE	YELLOW	—
6S	SPARE GREEN	GREY	YELLOW	—
6	WALK	BLACK	—	—
6	DONT WALK	BLUE	—	—
4	RED	RED	WHITE	—
4	YELLOW	YELLOW	WHITE	—
4	GREEN	GREEN	WHITE	—
4S	SPARE RED	RED	BROWN	—
4S	SPARE YELLOW	YELLOW	BROWN	—
4S	SPARE GREEN	GREEN	BROWN	—
4	WALK	TAN	—	—
4	DONT WALK	PURPLE	—	—
8	RED	RED	WHITE	BLUE
8	YELLOW	YELLOW	WHITE	BLUE
8	GREEN	GREEN	WHITE	BLUE
8S	SPARE RED	RED	PURPLE	—
8S	SPARE YELLOW	YELLOW	PURPLE	—
8S	SPARE GREEN	GREEN	PURPLE	—
8	WALK	TAN	BLUE	—
8	DONT WALK	PURPLE	BLUE	—
2	PUSHBUTTON	TAN	WHITE	—
6	PUSHBUTTON	PURPLE	WHITE	—
4	PUSHBUTTON	BROWN	—	—
8	PUSHBUTTON	BROWN	BLUE	—
1	RED	PINK	WHITE	—
1	YELLOW	ORANGE	WHITE	—
1	GREEN	GREY	WHITE	—
1	FLASH YELLOW	ORANGE	GREY	BLUE
1S	SPARE RED	PINK	PURPLE	—
1S	SPARE YELLOW	ORANGE	PURPLE	—
1S	SPARE GREEN	GREY	PURPLE	—
5	RED	RED	BLACK	—
5	YELLOW	YELLOW	BLACK	—
5	GREEN	GREY	BLACK	—
5	FLASH YELLOW	YELLOW	GREY	BLUE
5S	SPARE RED	RED	BLUE	—
5S	SPARE YELLOW	YELLOW	BLUE	—
5S	SPARE GREEN	GREY	BLUE	—
3	RED	PINK	WHITE	BLUE
3	YELLOW	ORANGE	WHITE	BLUE
3	GREEN	GREY	WHITE	BLUE
3	FLASH YELLOW	ORANGE	BROWN	BLUE
3S	SPARE RED	PINK	BROWN	—
3S	SPARE YELLOW	ORANGE	BROWN	—
3S	SPARE GREEN	GREY	BROWN	—
7	RED	RED	BLACK	BLUE
7	YELLOW	YELLOW	BLACK	BLUE
7	GREEN	GREEN	BLACK	BLUE
7	FLASH YELLOW	YELLOW	BROWN	BLUE
7S	SPARE RED	RED	PINK	—
7S	SPARE YELLOW	YELLOW	PINK	—
7S	SPARE GREEN	GREEN	PINK	—
ALL	PUSHBUTTON COMMON	BROWN	WHITE	—
ALL	SIGNAL HEAD NEUTRAL	WHITE	—	—

All Wire Tracer Colors Are To Have Recognizable Paint Strips, Marked Full Length.

COLOR CODE CHART FOR CONTROL CABLE

7 CONDUCTOR CONTROL CABLE			PEDESTRIAN PHASES	VEHICLE PHASES	SIGNAL HEAD TYPES			
CONDUCTOR NUMBER	BASE COLOR	FIRST TRACER	1 Pedestrian Phase	1 Vehicle Phase	6L	4L, 5 or 7	2, 3L, 3R, 4 or 9	10
1	WHITE	—	NEUTRAL	NEUTRAL	NEUTRAL	NEUTRAL	NEUTRAL	NEUTRAL
2	BLACK	—	WALK	YELLOW	YELLOW	YELLOW	YELLOW	YELLOW
3	RED	—	DONT WALK	RED	RED	RED	RED	RED 1
4	ORANGE	—	P.B. COMMON	SPARE	FLASHING YELLOW	TURN YELLOW	SPARE	RED 2
5	GREEN	—	PUSHBUTTON	GREEN	GREEN	GREEN	GREEN	SPARE
6	BLUE	—	SPARE	SPARE	SPARE	TURN GREEN	SPARE	SPARE
7	WHITE	BLACK	SPARE	SPARE	SPARE	SPARE	SPARE	SPARE

Type 8 signal head indications for ramp meters shall be wired from the type 2 signal head terminal block for the same phase.

Mark Phase Number On Cable With Permanent Tags. Use Handheld Labeler (Brady IDXPERT With XC-1500-580-WT-BK Tags Or Approved Equal) .

At Existing Installations The Contractor Is Responsible For the Re-wiring And Re-numbering Of New And Existing Control Cables, In Junction Boxes And Cabinet.

NOTES:

All Tracer Colors To Be Spiraled At All Exposed Locations. Wiring For Overlaps Shall Be Labeled (OLA,OLB,OLC,OLD) On All Ends. Unused Colors From Single Conductor Chart, With Additional Tracers, May Be Used For Overlaps

Tone Wire For Conduit Locate's:

 # 16 AWG THWN Orange Base With Blue Tracer

ODD PHASE PED WIRE COLOR CODE		
STANDARD COLOR CODE FOR THE WIRING OF PEDESTRIAN PHASES 1, 3, 5, AND 7. USE THE FOLLOWING:		
PHASE 1 PED	PHASE 2 PED	COLOR CODE WITH THE ADDITION OF A YELLOW TRACER
PHASE 3 PED	PHASE 4 PED	
PHASE 5 PED	PHASE 6 PED	
PHASE 7 PED	PHASE 8 PED	

CALC. BOOK NO. N/A

BASELINE REPORT DATE 12-31-12

ACCOMPANIED BY BASELINE REPORT

NOTE: All material and workmanship shall be in accordance with the current Oregon Standard Specifications

The selection and use of this Standard Drawing, while designed in accordance with generally accepted engineering principles and practices, is the sole responsibility of the user and should not be used without consulting a Registered Professional Engineer.

OREGON STANDARD DRAWINGS

COLOR CODE CHARTS

2015

REVISIONS

DATE	DESCRIPTION

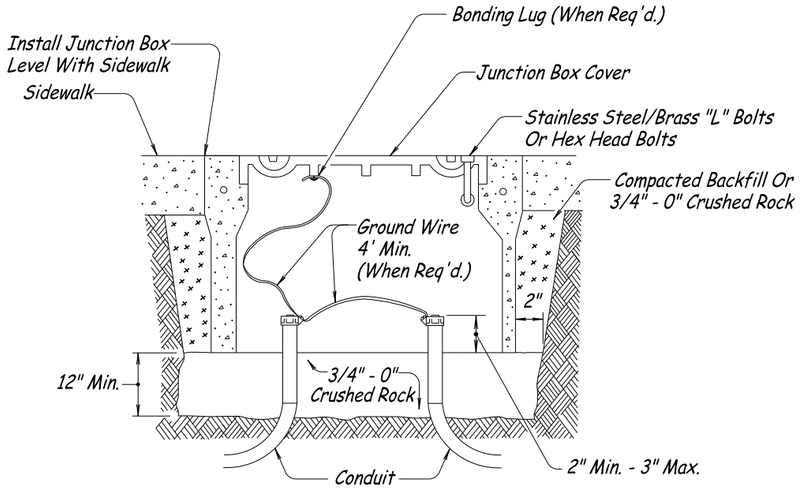

INSTALLATION IN SIDEWALK OR AT BACK OF CURB

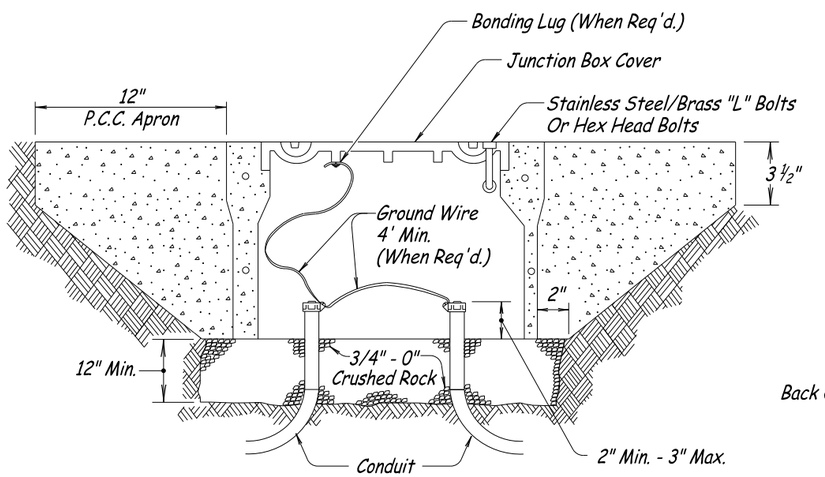

INSTALLATION WITH PORTLAND CEMENT CONCRETE APRON

(For Incidental Travel Areas Only; Gravel Shoulders, Behind Guardrail, Etc.)

NOTE:

Use Stainless Steel / Brass Bolts Or Hex Head Bolts To Secure Lid.

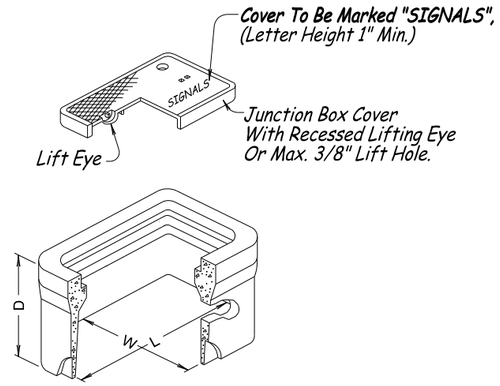

JUNCTION BOX

Not To Be Used In Travel Lanes, Shoulders Or Areas Exposed To Traffic.
For Location And Junction Box Dimensions, See Plans.

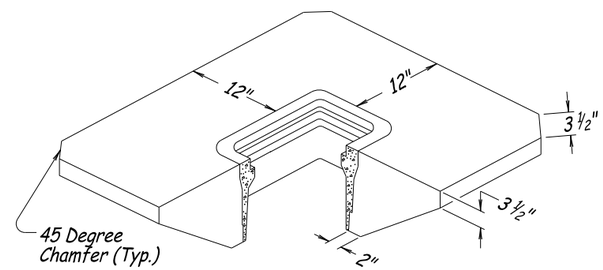

PORTLAND CEMENT CONCRETE APRON

(Approx. 7ft³ Concrete In Neat Section)

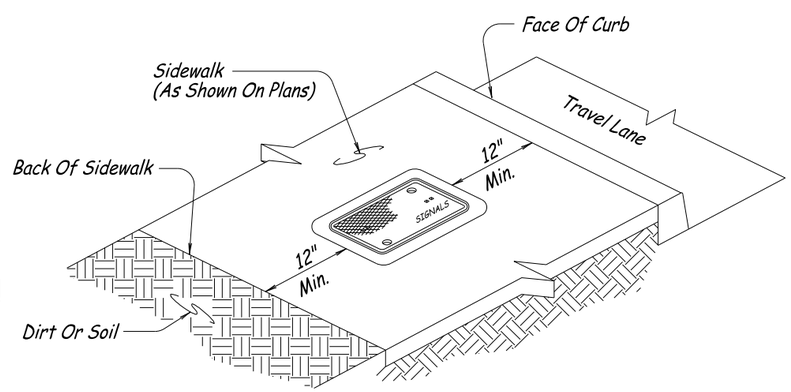

JUNCTION BOX PLACEMENT WITHIN SIDEWALKS

(Junction Boxes To Be Located Only In Flat Areas Of Sidewalks, Concrete Junction Boxes Are Not To Be Installed In Slopes Of Ramps Or Driveways)

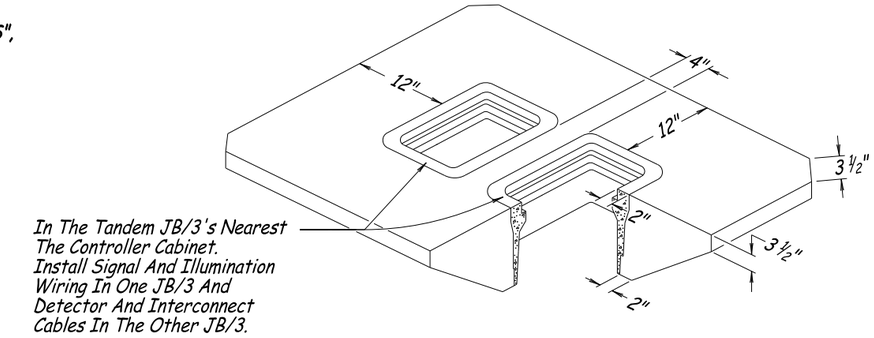

PORTLAND CEMENT CONCRETE APRON FOR TANDEM JB/3A JUNCTION BOXES

(Approx. 10ft³ Concrete In Neat Section)

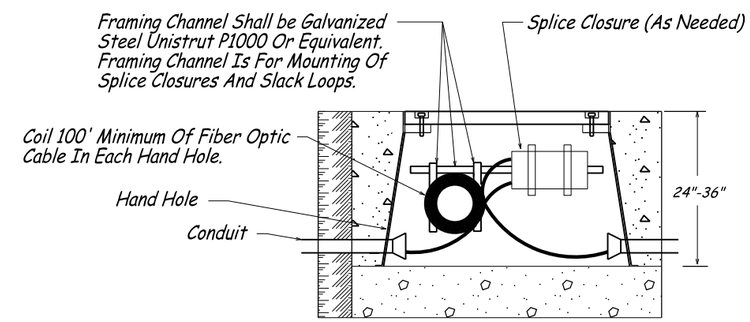

INSTALLATION OF HAND HOLE

Type	L	W	D	Type	L	W	D
JB1	17"	10"	12"	HH-1	24"	30"	24"
JB2	22"	12"	12"	HH-2	30"	48"	24"
JB3	30"	17"	12"	HH-3	30"	48"	36"

JUNCTION BOX/ HAND HOLE DIMENSION TABLE

CALC. BOOK NO. N/A

BASELINE REPORT DATE 07-01-14

ACCOMPANIED BY BASELINE REPORT

NOTE: All material and workmanship shall be in accordance with the current Oregon Standard Specifications

The selection and use of this Standard Drawing, while designed in accordance with generally accepted engineering principles and practices, is the sole responsibility of the user and should not be used without consulting a Registered Professional Engineer.

OREGON STANDARD DRAWINGS

TRAFFIC SIGNAL JUNCTION BOXES/HAND HOLES

2015

REVISIONS

DATE	DESCRIPTION

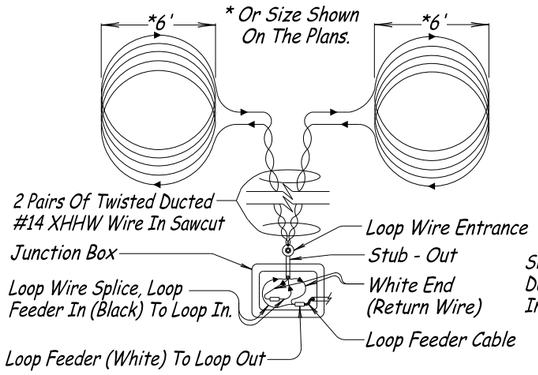

TWO LOOPS IN SERIES
(TYPICAL WIRING DIAGRAM)

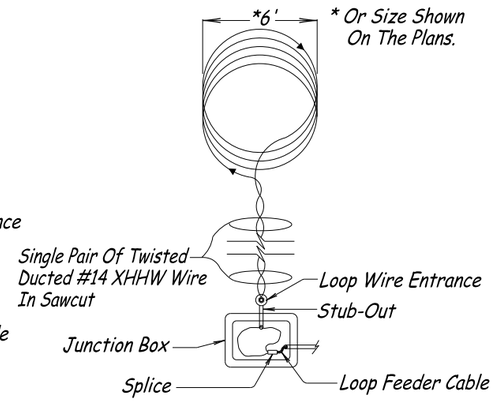

SINGLE LOOP

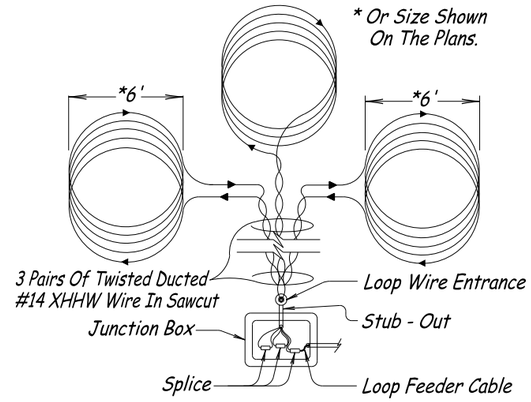

THREE LOOPS IN SERIES

LOOP DETECTOR WINDING PATTERN

(Arrows Indicate Direction Of Loop Winding)

Loops Shall Be Round Or Square With 5 Turns Of Ducted No. 14 XHHW Stranded Wire Centered In The Traffic Lane Or As Shown On Plans. Loop Wire Shall Be Twisted 4 To 6 Turns Per Foot Between Loop And Junction Box. All Loops Shall Be Individually Wired As Shown.

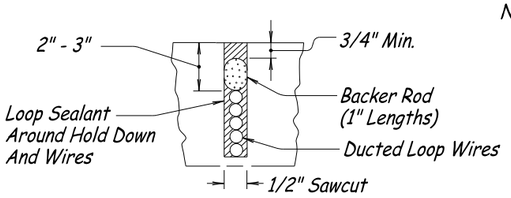

SAWCUT CROSS SECTION

LOOP WIRE INSTALLATION IN EXISTING CONCRETE OR STANDARD ASPHALT MIXES

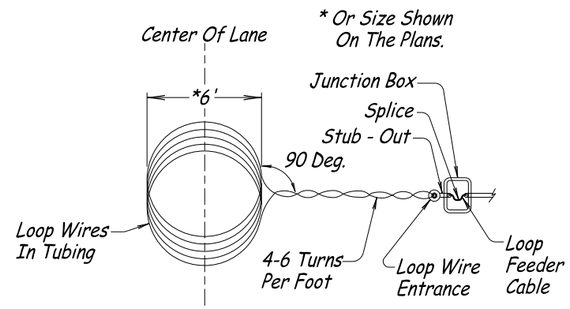

ROUND LOOP LAYOUT

Use Round Loop As Shown On Plans

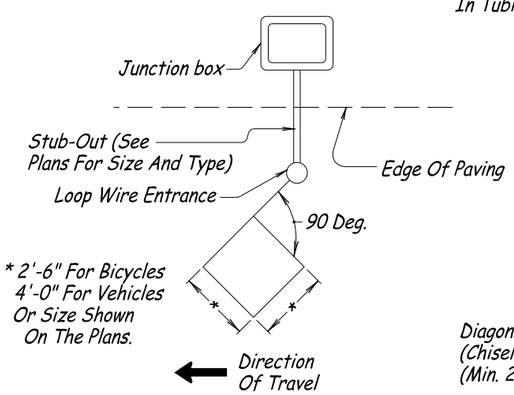

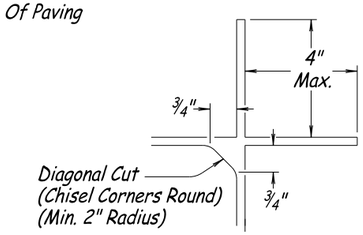

DIAMOND LOOP LAYOUT

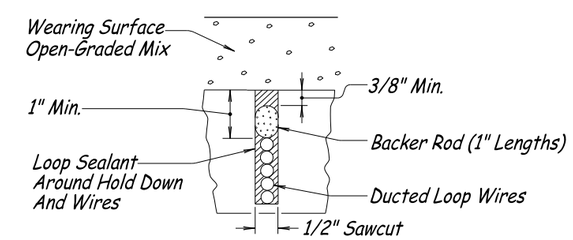

SAWCUT CROSS SECTION

LOOP WIRE INSTALLATION IN BASE LIFT (OR AFTER GRINDING). PRIOR TO PLACEMENT OF OPEN-GRADED MIX FOR WEARING SURFACE.

(If Placed On Open-Graded Mix, Install 5/8" Deeper And Leave Loop Sealant Down 1/2 "- 5/8 " From AC Surface. DO NOT Totally Fill Saw Slot.)

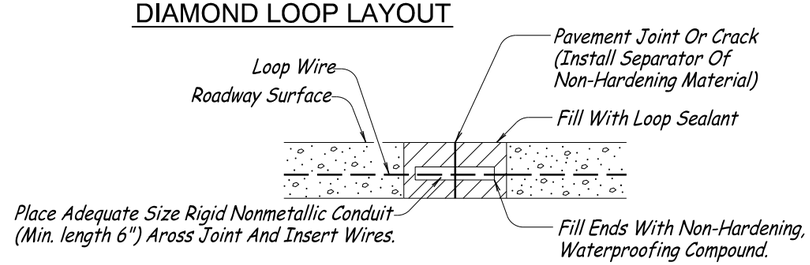

PAVEMENT JOINT AND CRACK CROSSING DETAIL

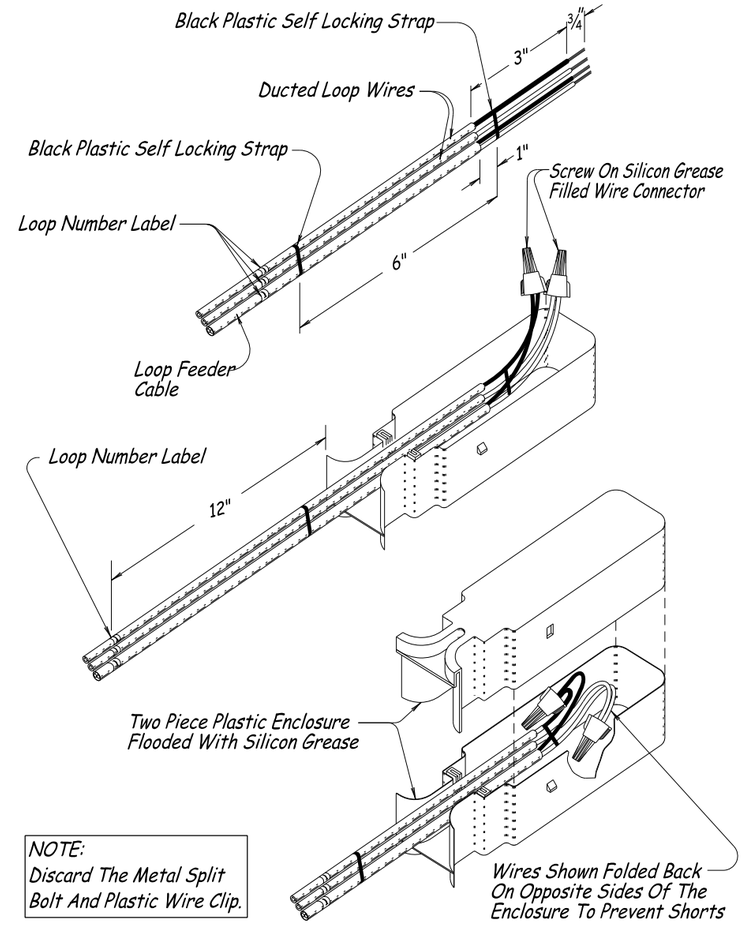

NOTE:
Discard The Metal Split Bolt And Plastic Wire Clip.

LOOP WIRE TO LOOP FEEDER SPLICES

Mark Loop Number On Loop Wire And Loop Feeder With Permanent Tags. Use Hand-held Labeler (Brady IDXPERT With XC-1500-580-WT-BK Tags, Or Approved Equal).

At Existing Installations The Contractor Is Responsible For Re-wiring And Re-numbering Of New And Existing Detector Loops And Loop Feeders, In JunctionBoxes And Cabinet, To Match Wiring Diagram.

CALC. BOOK NO. N/A	BASELINE REPORT DATE 07-01-14
ACCOMPANIED BY BASELINE REPORT	NOTE: All material and workmanship shall be in accordance with the current Oregon Standard Specifications
The selection and use of this Standard Drawing, while designed in accordance with generally accepted engineering principles and practices, is the sole responsibility of the user and should not be used without consulting a Registered Professional Engineer.	OREGON STANDARD DRAWINGS LOOP DETAILS 2015

REVISIONS

DATE	DESCRIPTION

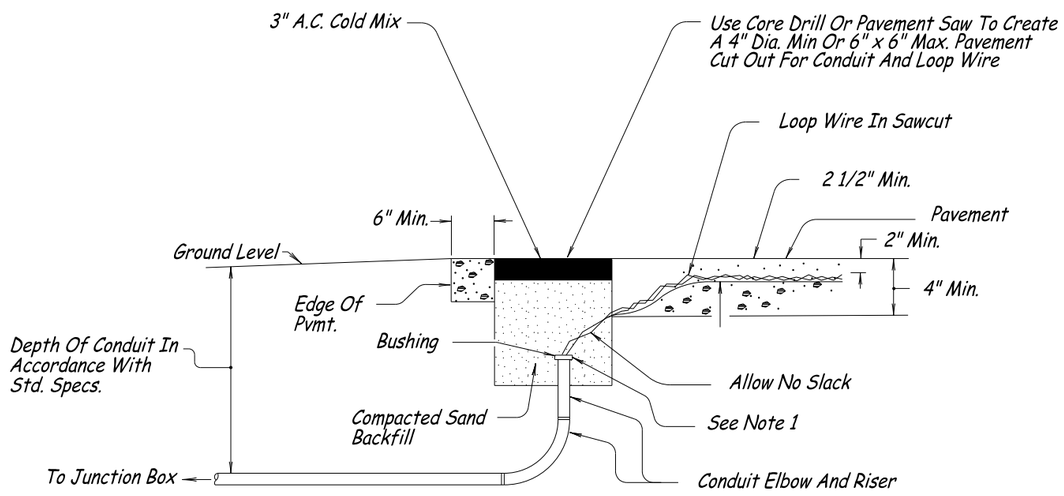

UNCURBED SECTION

On Monolithic Curbs, Locate Loop Entrance In Pavement At The Edge Of Concrete Gutter (All Other Notes Apply As Above)

SAND POCKET OPTION

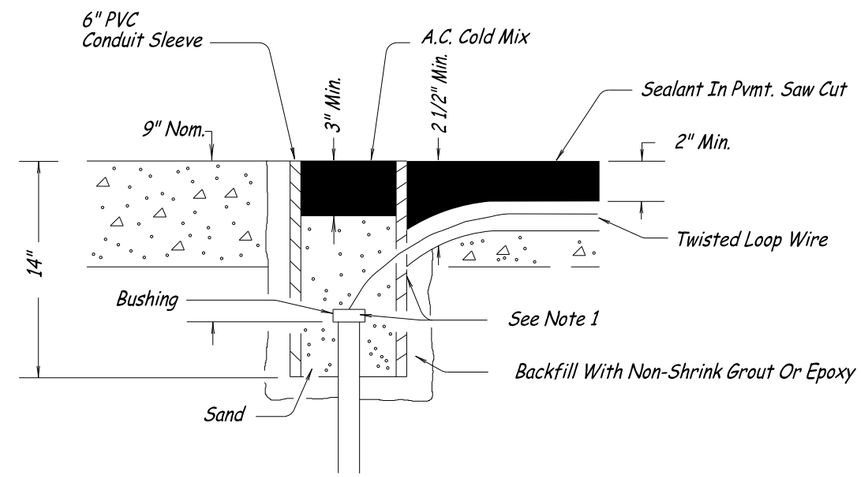

PVC CONDUIT OPTION

LOOP WIRE ENTRANCES

SAND POCKET OPTION OR P.V.C. CONDUIT INTALLATION NOTES:

1.) Install Conduit Plug To Each End Of Conduit Before Installing Sand And A.C.

2.) Elbows And Risers For Conduit Back Into The First Junction Box May Be Any Rigid Non-Metallic Conduit.

CALC. BOOK NO. N/A

BASELINE REPORT DATE 12-31-13

ACCOMPANIED BY BASELINE REPORT

NOTE: All material and workmanship shall be in accordance with the current Oregon Standard Specifications

The selection and use of this Standard Drawing, while designed in accordance with generally accepted engineering principles and practices, is the sole responsibility of the user and should not be used without consulting a Registered Professional Engineer.

OREGON STANDARD DRAWINGS

LOOP ENTRANCE DETAILS

2015

REVISIONS

DATE	DESCRIPTION

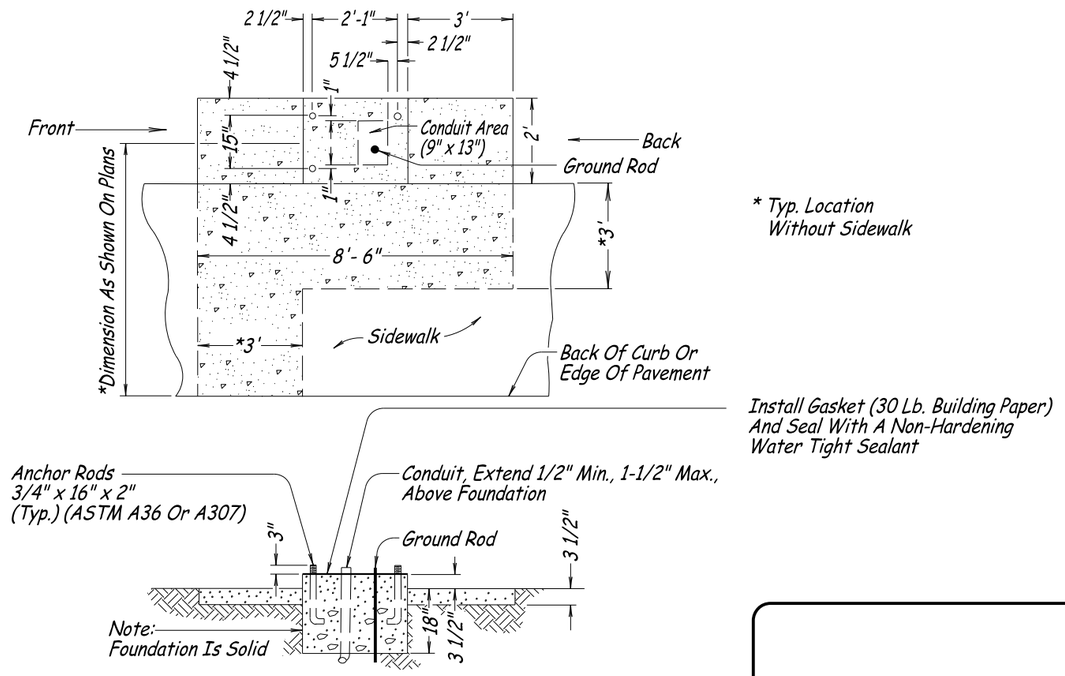

* Typ. Location
Without Sidewalk

CABINET FOUNDATION DETAIL

(Model 332, 334, And 340 Cabinets)

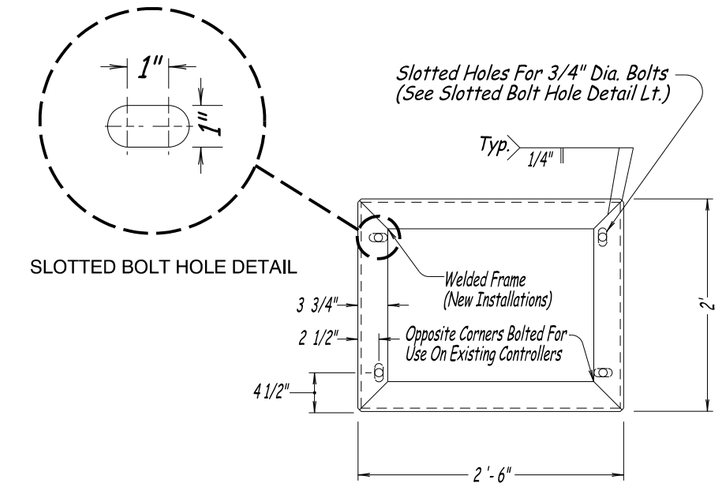

RISER FRAME

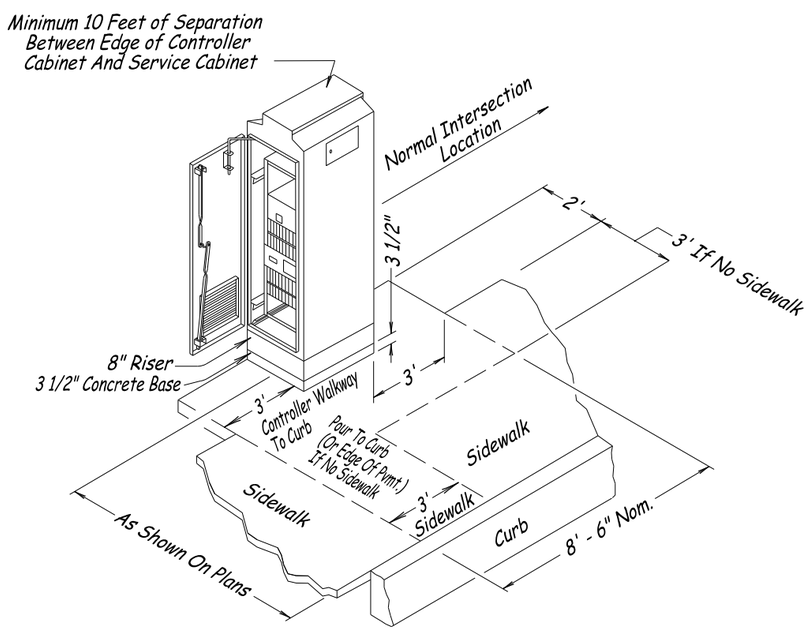

CABINET SITE LAYOUT

(Model 332, 334, And 340 Cabinets)

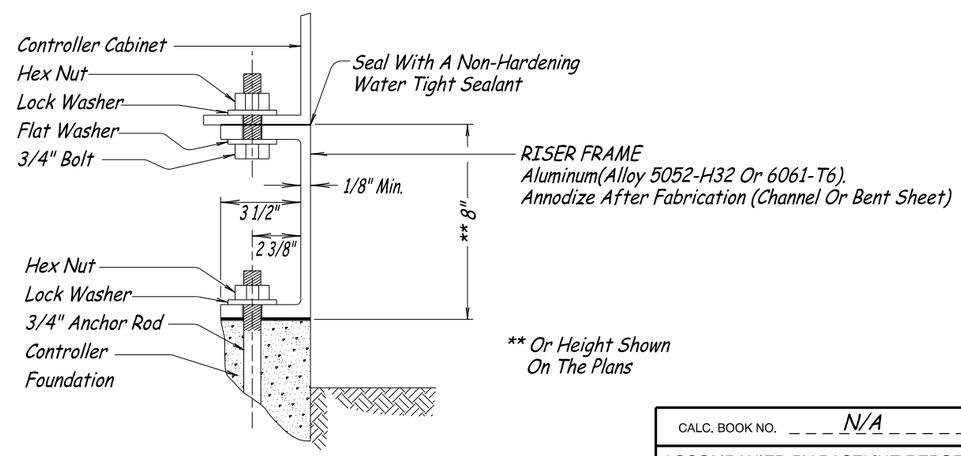

RISER FRAME CONNECTION DETAIL

332, 334, AND 340 CABINET RISER FRAME

GENERAL NOTES:

Separate The Controller Cabinet And The Service Cabinet By 10 Feet Or More.

All Surface Joints Where Concrete And Aluminum Meet Shall Be Gasketed With 30 Lb. Building Paper.

All Bolts, Nuts And Washers Shall Be Galvanized Steel Unless Noted Otherwise.

Stainless Steel Or Galvanized Steel May Be Used For Mounting Cabinet To Riser Frame.

CALC. BOOK NO. N/A	BASELINE REPORT DATE 01-03-14
ACCOMPANIED BY BASELINE REPORT	NOTE: All material and workmanship shall be in accordance with the current Oregon Standard Specifications

The selection and use of this Standard Drawing, while designed in accordance with generally accepted engineering principles and practices, is the sole responsibility of the user and should not be used without consulting a Registered Professional Engineer.

OREGON STANDARD DRAWINGS

CONTROLLER CABINET AND FOUNDATION DETAILS

2015

REVISIONS

DATE	DESCRIPTION

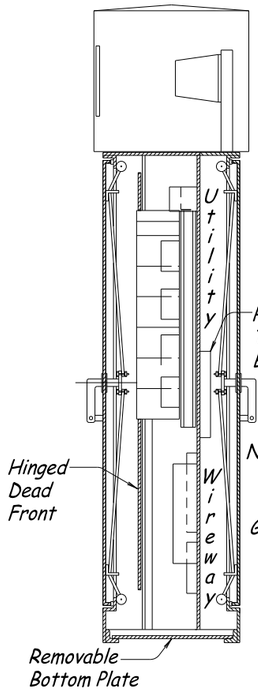

SIDE VIEW

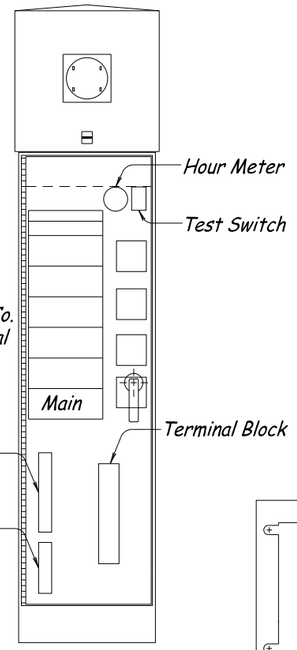

FRONT VIEW

BASE MOUNTED SERVICE & CONTROL CABINET WITH METER

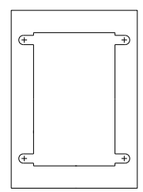

BASE MOUNTING

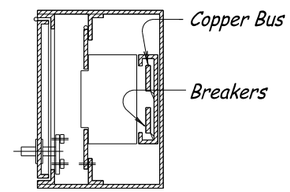

HORIZONTAL SECTION

BASE MOUNTED SERVICE & CONTROL CABINET WITHOUT METER

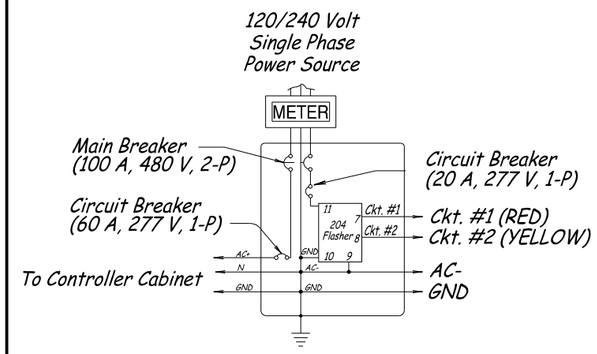

SERVICE CABINET WIRING WITH FLASHER BMCF

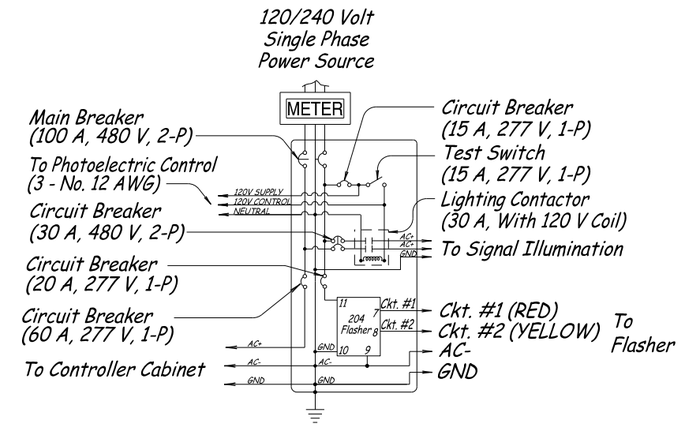

SERVICE CABINET WIRING FOR SIGNAL, FLASHER & 240 VOLT ILLUMINATION BMCFL

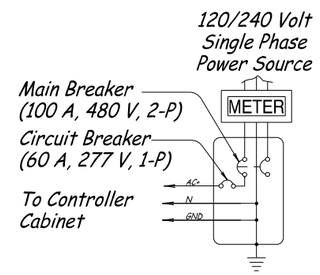

SERVICE CABINET WIRING FOR 120/240 VOLT SIGNAL SERVICE BMC

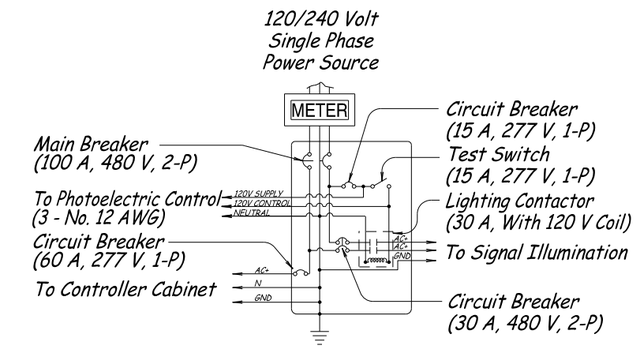

SERVICE CABINET WIRING WITH 240 VOLT ILLUMINATION BMCL

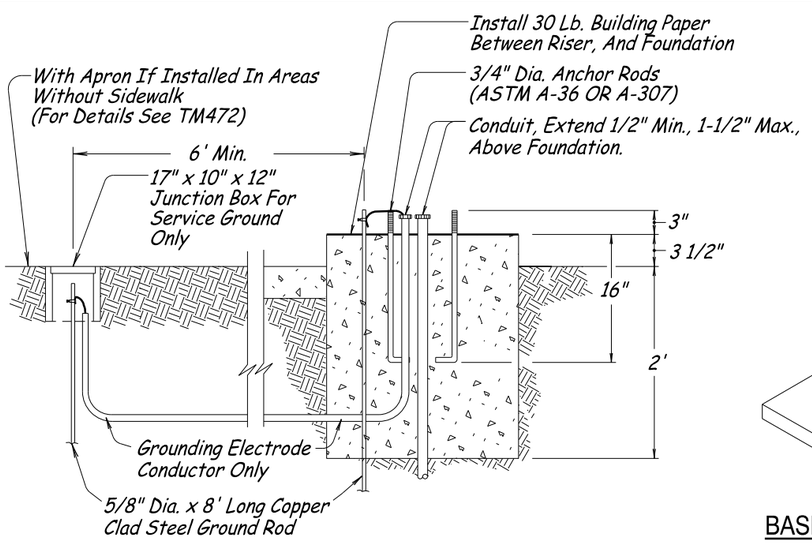

BASE MOUNTED SERVICE & CONTROL CABINET FOUNDATION

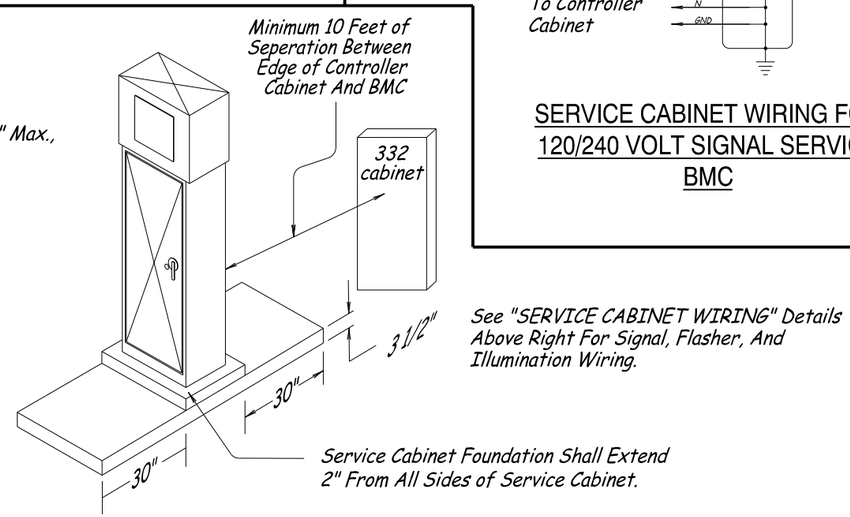

See "SERVICE CABINET WIRING" Details Above Right For Signal, Flasher, And Illumination Wiring.

BASE MOUNTED CABINET FOUNDATION WITH LANDINGS

CALC. BOOK NO. N/A

BASELINE REPORT DATE 07-01-15

ACCOMPANIED BY BASELINE REPORT

NOTE: All material and workmanship shall be in accordance with the current Oregon Standard Specifications

The selection and use of this Standard Drawing, while designed in accordance with generally accepted engineering principles and practices, is the sole responsibility of the user and should not be used without consulting a Registered Professional Engineer.

OREGON STANDARD DRAWINGS

SERVICE CABINETS AND SERVICE CABINET WIRING DETAILS

2015

REVISIONS

DATE	DESCRIPTION
07-01-15	Added a Circuit for the Controller Cabinet to both the BMCF and BMCFL.
---------	Enlarged the Service Cabinet Foundation by 2 Inches on All Sides.

TM500.dgn 07-01-2015

W

4" WHITE LINE

W-2

8" WHITE LINE

Y

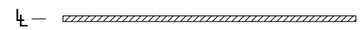

4" YELLOW LINE

CH

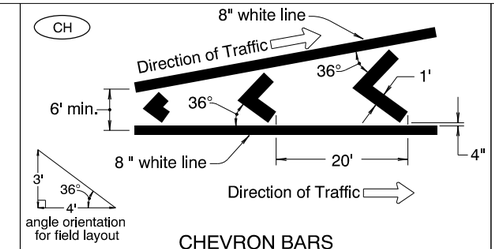

CHEVRON BARS
1' WHITE BARS AT 20' SPACING

TM

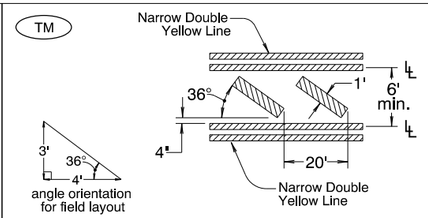

TRANSVERSE MEDIAN BARS
1' YELLOW BARS AT 20' SPACING

WB

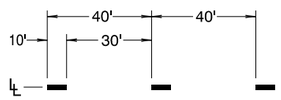

4" WHITE BROKEN LINE

YB

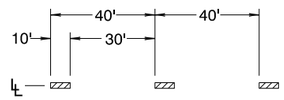

4" YELLOW BROKEN LINE

WD

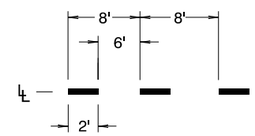

4" WHITE DOTTED LINE
For lane extensions

WD-2

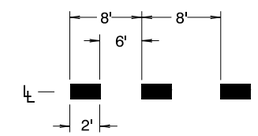

8" WHITE DOTTED LINE
For lane extensions and bike lane extensions

YD

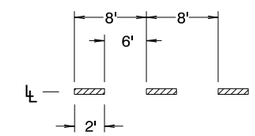

4" YELLOW DOTTED LINE
For lane extensions

DLL

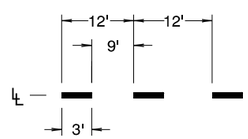

4" WHITE DOTTED LANE LINE
For lane lines in acceleration/deceleration lanes

DLL-2

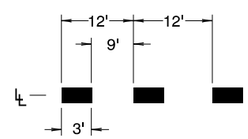

8" WHITE DOTTED LANE LINE
For lane lines in drop lanes

NPR

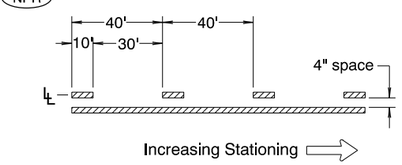

NO-PASS RIGHT
4" YELLOW LINES

NPL

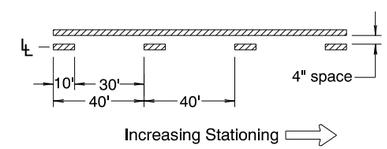

NO-PASS LEFT
4" YELLOW LINES

TWL

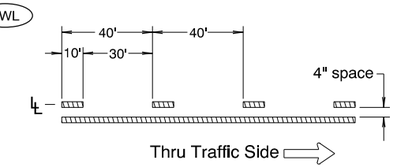

TWO-WAY LEFT TURN
4" YELLOW LINES

TM-40

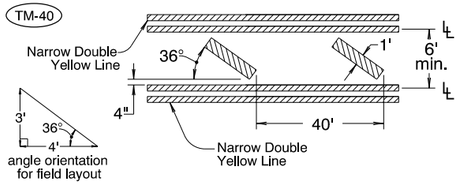

TRANSVERSE MEDIAN BARS
1' YELLOW BARS AT 40' SPACING
For use at painted medians where
distance between left turn refuges exceeds 200'

D

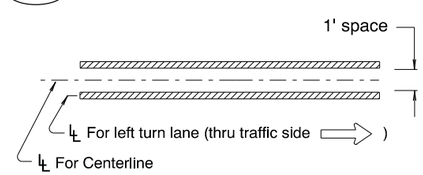

DOUBLE NO-PASS
TWO 4" YELLOW LINES

ND

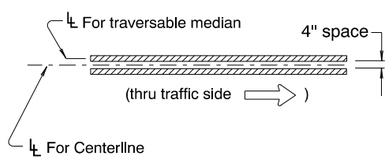

NARROW DOUBLE NO-PASS
TWO 4" YELLOW LINES

NDW

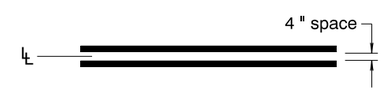

NARROW DOUBLE NO-LANE CHANGE
TWO 4" WHITE LINES

TS

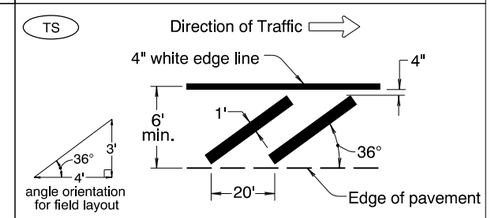

TRANSVERSE SHOULDER BARS
1' WHITE BARS AT 20' SPACING

HC

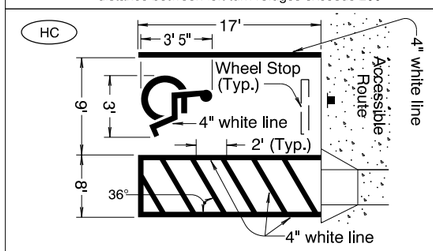

DISABLED PARKING DETAIL (white)

YLD

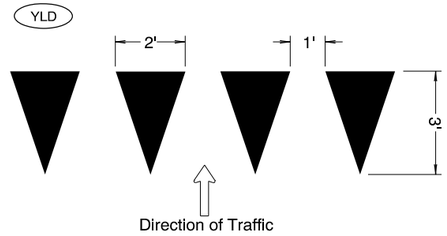

YIELD LINE (white)

BYLD

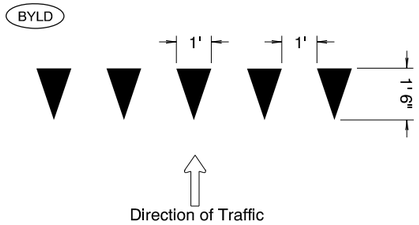

BICYCLE YIELD LINE (white)

LEGEND

Direction Of Traffic, Increasing Stationing
Or Thru Traffic Side

Lane line dimensions are shown on the
striping plans

CALC. BOOK NO. N/A	BASELINE REPORT DATE 07/01/2015
The selection and use of this Standard Drawing, while designed in accordance with generally accepted engineering principles and practices, is the sole responsibility of the user and should not be used without consulting a Registered Professional Engineer.	NOTE: All material and workmanship shall be in accordance with the current Oregon Standard Specifications

OREGON STANDARD DRAWINGS

PAVEMENT MARKING
STANDARD DETAIL BLOCKS
2015

DATE	REVISION DESCRIPTION
01/2015	Modified Bike Yield Line title to match section 00867 specification.
07/2015	Modified Lane Line alignment on TM, TWL, and TM-40 details.

TM501.dgn 07-01-2015

RR

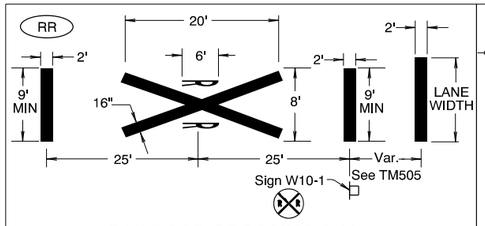

RAILROAD CROSSING (white)

Install per ODOT Rail Crossing Order or as shown.
For letter proportion details, see current version of Standard Highway Signs

NRR

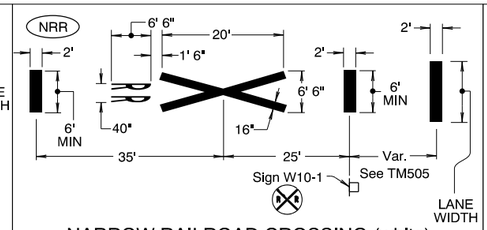

NARROW RAILROAD CROSSING (white)

Install per ODOT Rail Crossing Order or as shown.
For letter proportion details, see current version of Standard Highway Signs

BRR

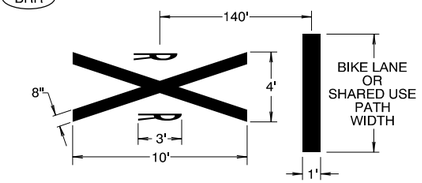

BICYCLE RAILROAD CROSSING (white)

Install per ODOT Rail Crossing Order or as shown.
For letter proportion details, see current version of Standard Highway Signs

HOV

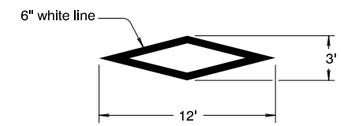

HIGH-OCCUPANCY VEHICLE DIAMOND DETAIL (white)

CG

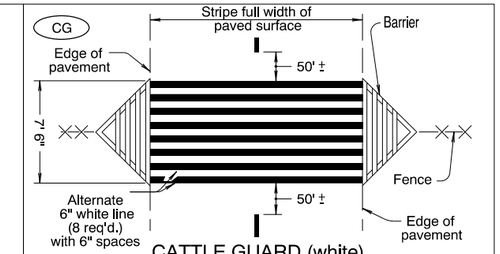

CATTLE GUARD (white)

For barrier and fence details, see Std. Dwg. RD110

SA

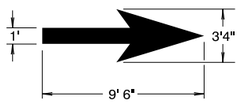

STRAIGHT ARROW (white)

For arrow proportion details, see current version of Standard Highway Signs

LA

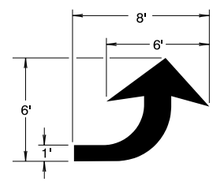

LEFT TURN ARROW (white)

For arrow proportion details, see current version of Standard Highway Signs

RA

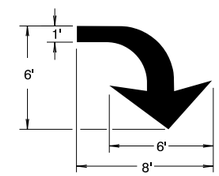

RIGHT TURN ARROW (white)

For arrow proportion details, see current version of Standard Highway Signs

LSA

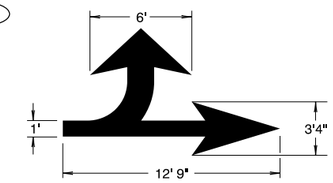

LEFT TURN STRAIGHT ARROW (white)

For arrow proportion details, see current version of Standard Highway Signs

RSA

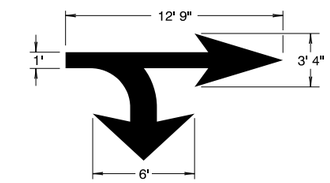

RIGHT TURN STRAIGHT ARROW (white)

For arrow proportion details, see current version of Standard Highway Signs

RALA

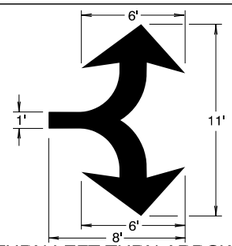

RIGHT TURN LEFT TURN ARROW (white)

For arrow proportion details, see current version of Standard Highway Signs

RSLA

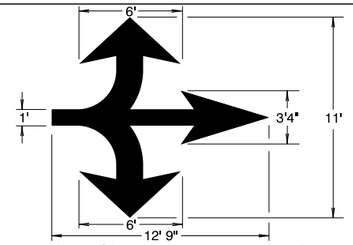

RIGHT TURN STRAIGHT LEFT TURN ARROW (white)

For arrow proportion details, see current version of Standard Highway Signs

E-SA

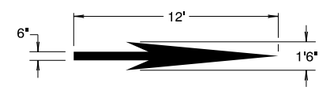

ELONGATED STRAIGHT ARROW (white)

For arrow proportion details, see current version of Standard Highway Signs

E-LA

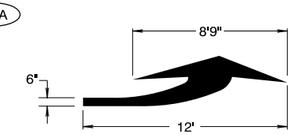

ELONGATED LEFT TURN ARROW (white)

For arrow proportion details, see current version of Standard Highway Signs

E-RA

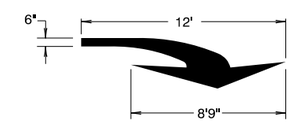

ELONGATED RIGHT TURN ARROW (white)

For arrow proportion details, see current version of Standard Highway Signs

E-LSA

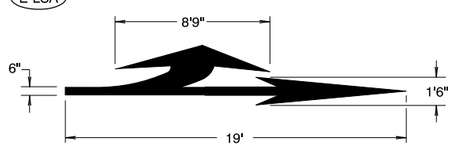

ELONGATED LEFT TURN STRAIGHT ARROW (white)

For arrow proportion details, see current version of Standard Highway Signs

E-RSA

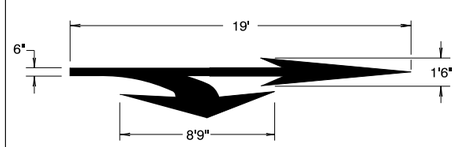

ELONGATED RIGHT TURN STRAIGHT ARROW (white)

For arrow proportion details, see current version of Standard Highway Signs

E-RALA

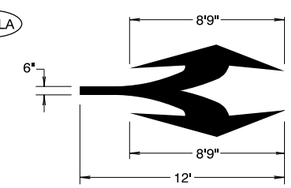

ELONGATED RIGHT TURN LEFT TURN ARROW (white)

For arrow proportion details, see current version of Standard Highway Signs

E-RSLA

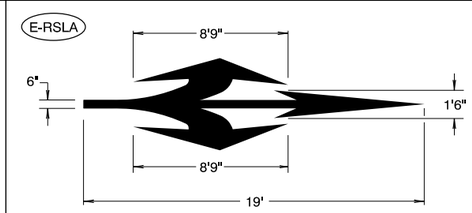

ELONGATED RIGHT TURN STRAIGHT LEFT TURN ARROW (white)

For arrow proportion details, see current version of Standard Highway Signs

LRA

Arrow orientation shown is used for right lane ends.

For left lane ends, use the mirror image.

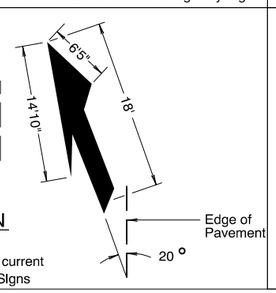

LANE REDUCTION ARROW (white)

For arrow proportion details, see current version of Standard Highway Signs

WWA

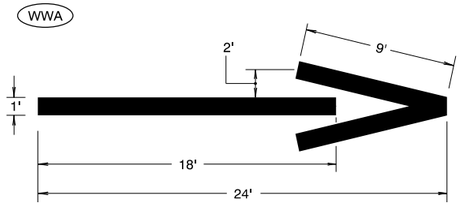

WRONG-WAY ARROW (white)

General Note:

1. Center pavement markings within the lane width.
2. Arrow and letter dimensions nominal, excluding WWA.

CALC. BOOK NO. N/A

BASELINE REPORT DATE 07/01/2015

NOTE: All material and workmanship shall be in accordance with the current Oregon Standard Specifications

The selection and use of this Standard Drawing, while designed in accordance with generally accepted engineering principles and practices, is the sole responsibility of the user and should not be used without consulting a Registered Professional Engineer.

OREGON STANDARD DRAWINGS

PAVEMENT MARKING STANDARD DETAIL BLOCKS

2015

DATE	REVISION DESCRIPTION
07/2015	Modified BRR detail for use on bike lane or shared use path.

TM501

TM503.dgn 07-01-2015

CW

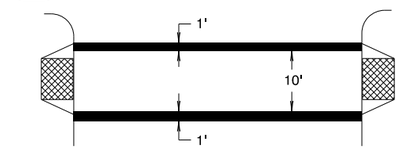

STANDARD CROSSWALK
TWO 1' WHITE BARS
Install per Standard Drawing TM530

CW-SC

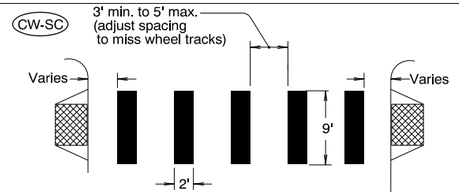

STAGGERED CONTINENTAL CROSSWALK
2' WHITE BARS
Install per Standard Drawing TM530

S

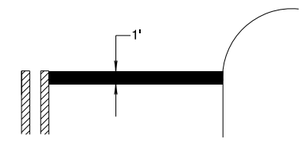

STOP BAR
1' WHITE BAR
Install per Standard Drawing TM530

S-2

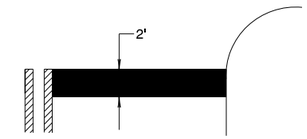

STOP BAR - LARGE
2' WHITE BAR
Install per Standard Drawing TM530

S-RM

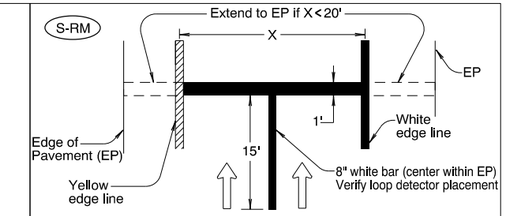

RAMP METER STOP BAR
1' & 8" WHITE BARS
For multi-lane ramp meter applications

BSR

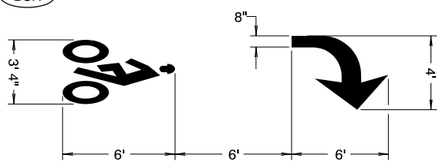

BIKE RIGHT TURN STENCIL (white)
Center marking within lane width
For proportion details, see current version of Standard Highway Signs

BS

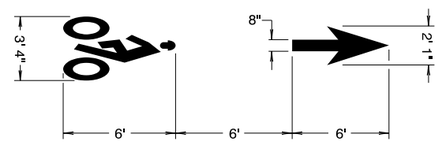

BIKE LANE STANDARD STENCIL (white)
Center marking within lane width
For proportion details, see current version of Standard Highway Signs

BSL

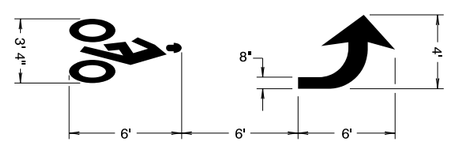

BIKE LEFT TURN STENCIL (white)
Center marking within lane width
For proportion details, see current version of Standard Highway Signs

SLM

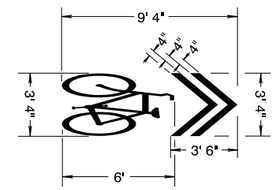

SHARED LANE MARKING (white)
Center marking within lane width or as shown
For proportion details, see current version of Standard Highway Signs

BUS

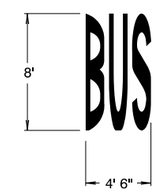

BUS (white)
Center marking within lane width
For letter proportion details, see current version of Standard Highway Signs

SCH

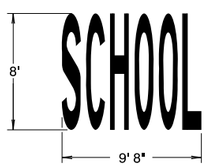

SCHOOL (white)
Center marking within lane width
For letter proportion details, see current version of Standard Highway Signs

SCH-LG

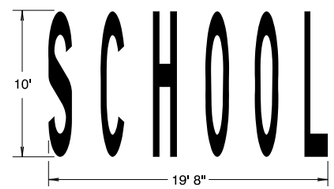

SCHOOL - LARGE (white)
Center marking within width of two lanes
For letter proportion details, see current version of Standard Highway Signs

CRS-LG

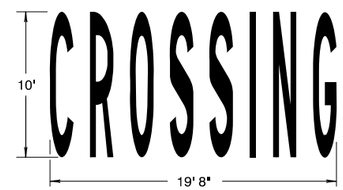

CROSSING - LARGE (white)
Center marking within width of two lanes
For letter proportion details, see current version of Standard Highway Signs

XNG

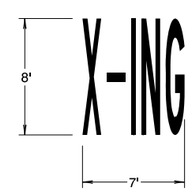

X-ING (white)
Center marking within lane width
For letter proportion details, see current version of Standard Highway Signs

ON

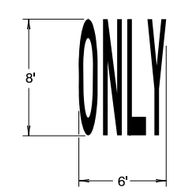

ONLY (white)
Center marking within lane width
For letter proportion details, see current version of Standard Highway Signs

P

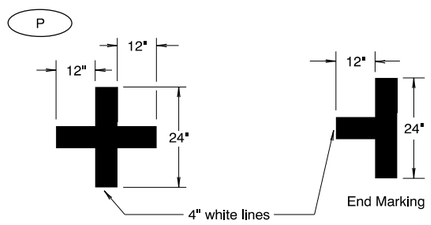

ON-STREET PARKING DETAIL (white)

General Note:

1. Arrow, letter, and bike symbol dimensions nominal.

LEGEND

Direction of Travel

CALC. BOOK NO. N/A

BASELINE REPORT DATE 07/01/2015

NOTE: All material and workmanship shall be in accordance with the current Oregon Standard Specifications

The selection and use of this Standard Drawing, while designed in accordance with generally accepted engineering principles and practices, is the sole responsibility of the user and should not be used without consulting a Registered Professional Engineer.

OREGON STANDARD DRAWINGS

PAVEMENT MARKING
STANDARD DETAIL BLOCKS
2015

DATE	REVISION DESCRIPTION
07/2015	Added SLM detail.

TM503

R:\SECURE\STANDARD DRAWINGS\2015Standards\15 June\plotfile_TM500s.dgn :: Default 7/1/2015 3:56:03 PM hwyr30c

Effective Date: December 1, 2015 - May 31, 2016

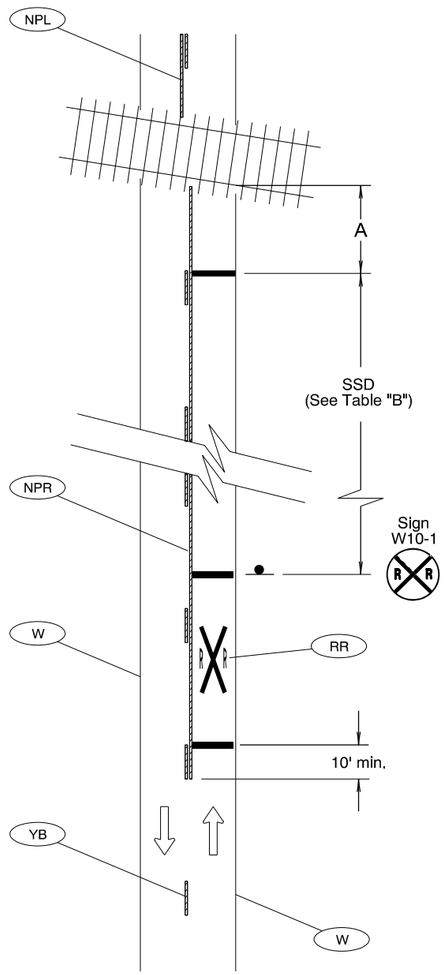

TYPICAL RAILROAD GRADE CROSSING MARKINGS
NO BIKE LANE

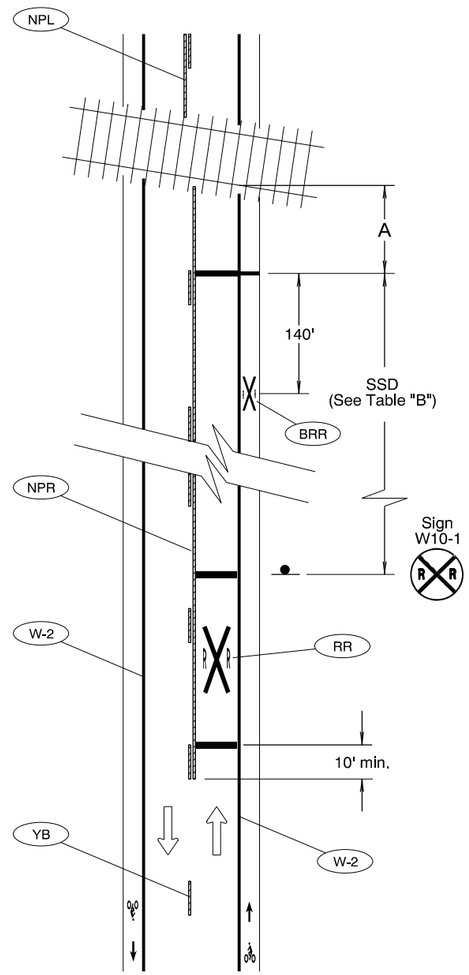

TYPICAL RAILROAD GRADE CROSSING MARKINGS
WITH BIKE LANE

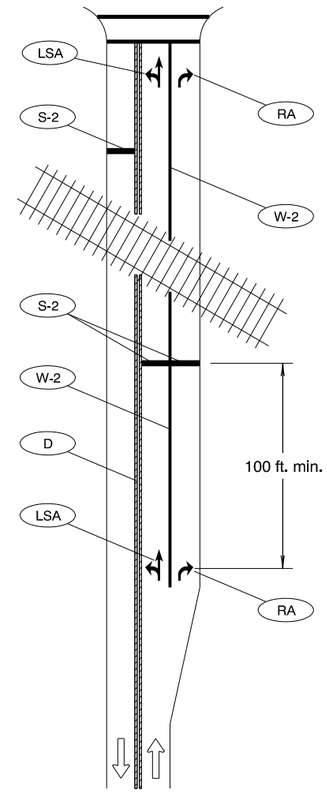

Do not place lane use arrows between the RxR stop bar and the tracks.

Lane use signing required if lane use arrows cannot be installed.

LANE USE ARROW MARKINGS APPROACHING
RAILROAD GRADE CROSSING
AT INTERSECTIONS WITH MULTIPLE LANES

Table "B"	
Posted Speed (mph)	Safe Stopping Distance SSD (In feet)
10	50 (100 Standard)
15	80 (100 Standard)
20	115
25	155
30	200
35	250
40	305
45	360
50	425
55	495
60	570
65	645

A = 12' min. from nearest rail or 1' in advance of the location where an automatic gate arm crosses the roadway. Install stop bar perpendicular to roadway.

General Notes:

1) See OAR Chapter 741-110 for details.
2) Install all markings per Crossing Order or as shown.
3) Start and end all longitudinal lines within 2 ft. of the nearest rail.
4) See TM501 for RR and BRR legend dimensions.

LEGEND

Increasing stationing from bottom to top

Direction of Travel

This sheet to be accompanied by Std. Dwg. Nos. TM500 thru TM503

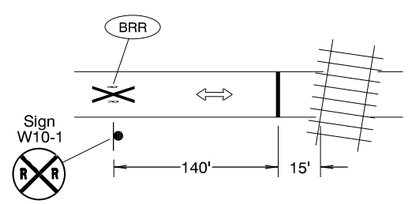

TYPICAL SHARED USE PATH
RAILROAD GRADE CROSSING MARKINGS

CALC. BOOK NO. N/A

BASELINE REPORT DATE 07/01/2015

NOTE: All material and workmanship shall be in accordance with the current Oregon Standard Specifications

The selection and use of this Standard Drawing, while designed in accordance with generally accepted engineering principles and practices, is the sole responsibility of the user and should not be used without consulting a Registered Professional Engineer.

OREGON STANDARD DRAWINGS

RAIL CROSSING
PAVEMENT MARKINGS
2015

DATE	REVISION DESCRIPTION
01/2015	Modified formatting. Matched RR legend call-outs to TM501.
07/2015	Added details for shared use paths and roads with bike lanes.

TM505.dgn 07-01-2015

TM505

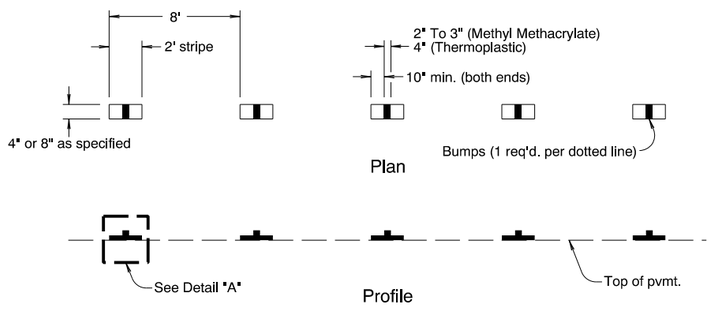

DOTTED LINE

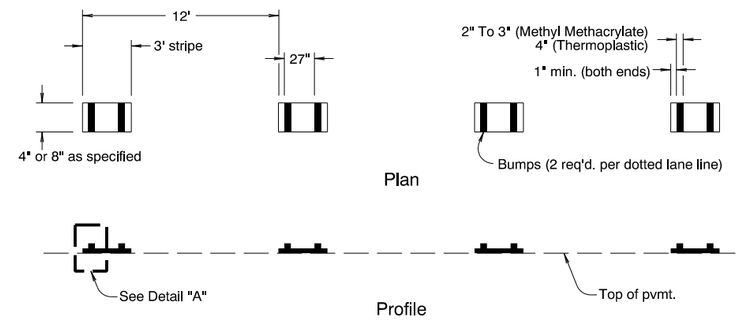

DOTTED LANE LINE

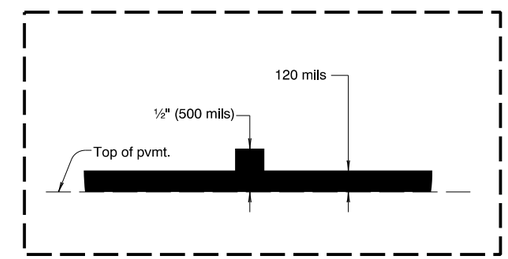

DETAIL "A"

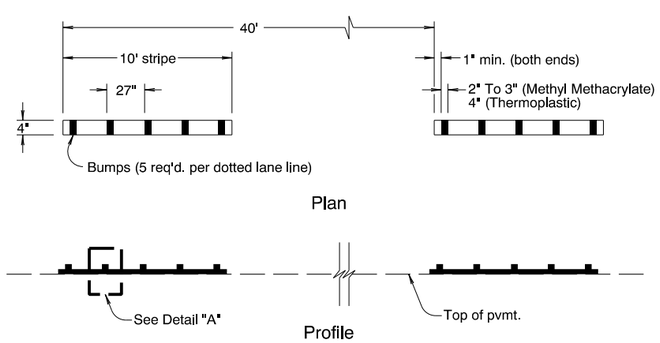

BROKEN LINE

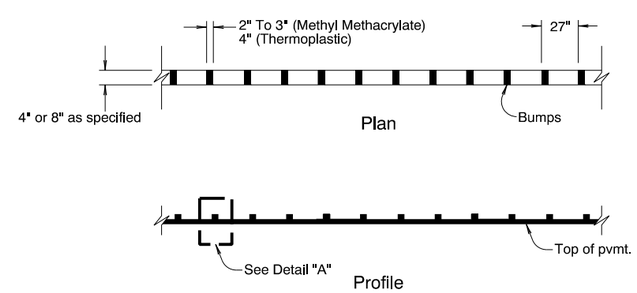

SOLID LINE

CALC. BOOK NO. N/A

BASELINE REPORT DATE 07/05/2013

NOTE: All material and workmanship shall be in accordance with the current Oregon Standard Specifications

The selection and use of this Standard Drawing, while designed in accordance with generally accepted engineering principles and practices, is the sole responsibility of the user and should not be used without consulting a Registered Professional Engineer.

OREGON STANDARD DRAWINGS

DURABLE PAVEMENT MARKINGS METHOD 'A' & METHOD 'D' SURFACE INSTALLED PROFILED

2015

DATE	REVISION DESCRIPTION

TM520.dgn 07-01-2015

TM520

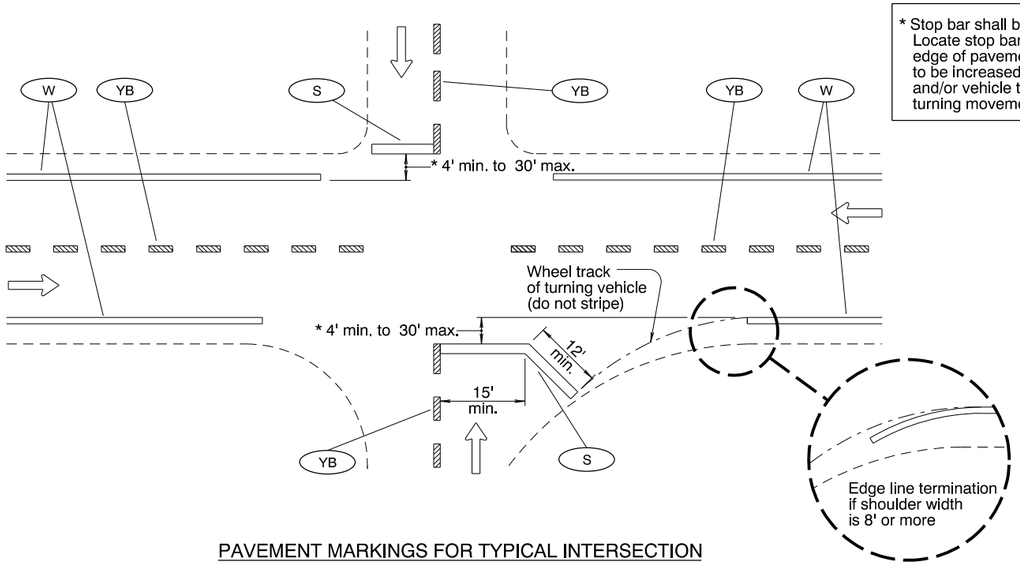

PAVEMENT MARKINGS FOR TYPICAL INTERSECTION

* Stop bar shall be placed as near as possible to the intersecting traveled way. Locate stop bar 4' min. to 30' max. in advance of the extended fog line, edge of pavement, or curb face. Minimum stop bar distance may need to be increased, depending on location of pedestrian ramps (see Detail "A") and/or vehicle turn radii (see Detail "B"). Field verify sight distance and truck turning movements.

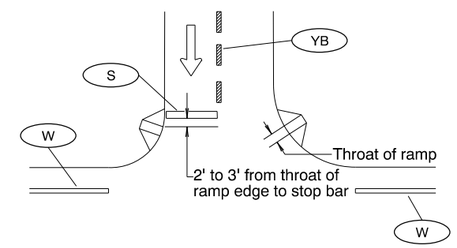

Detail "A"
STOP BAR PLACEMENT WITH
RESPECT TO PEDESTRIAN RAMPS

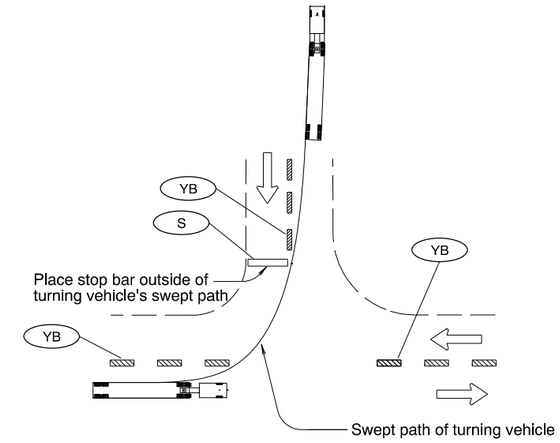

Detail "B"
STOP BAR PLACEMENT WITH
RESPECT TO TURN RADII

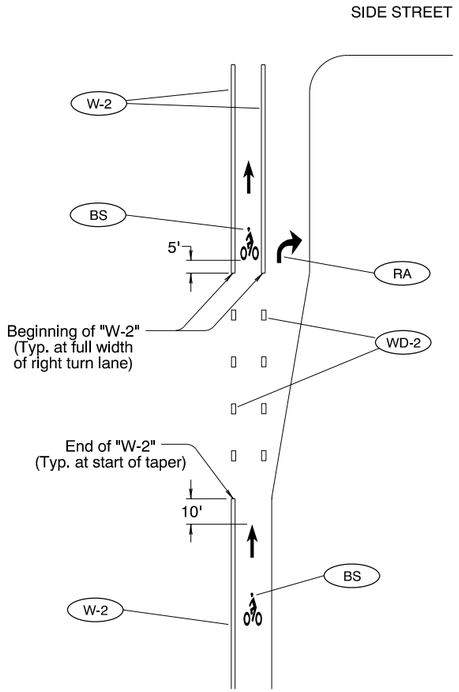

INSTALLATION OF BIKE LANE STENCILS
FOR BIKE LANE SEPARATED BY RIGHT TURN LANE

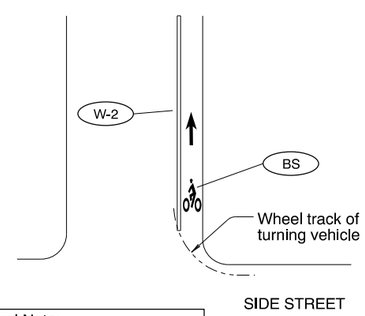

General Note:

Install bike lane stencil to avoid right turning vehicle wheel tracks.

INSTALLATION OF BIKE LANE STENCILS
FOLLOWING INTERSECTIONS

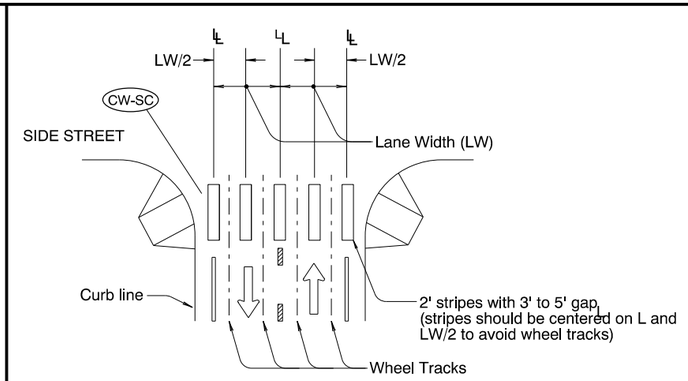

STAGGERED CONTINENTAL LAYOUT

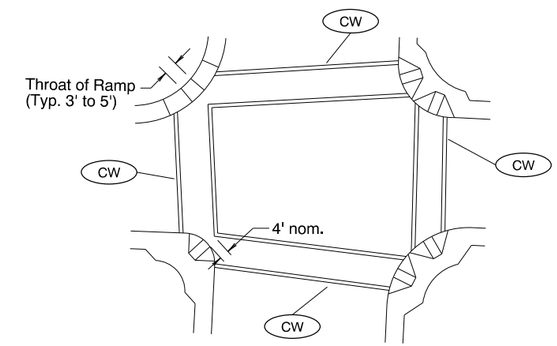

STANDARD CROSSWALK BARS
AT INTERSECTION

To be accompanied by Standard Dwg. Nos. TM500 thru TM503

General Note:

1. Install crosswalk bars such that the throat of the ADA ramp is entirely within crosswalk markings, or 5' back of extended fog line, edge of pavement, or curb face.

LEGEND

Direction of Travel

L - Lane line dimensions are shown on the striping plans

CALC. BOOK NO.	BASELINE REPORT DATE July 1, 2010
The selection and use of this Standard Drawing, while designed in accordance with generally accepted engineering principles and practices, is the sole responsibility of the user and should not be used without consulting a Registered Professional Engineer.	NOTE: All material and workmanship shall be in accordance with the current Oregon Standard Specifications

OREGON STANDARD DRAWINGS

INTERSECTION PAVEMENT MARKINGS (CROSSWALK, STOP BAR & BIKE LANE STENCIL)

2015

DATE	REVISION DESCRIPTION

TM530.dgn 7-1-2010

TM530

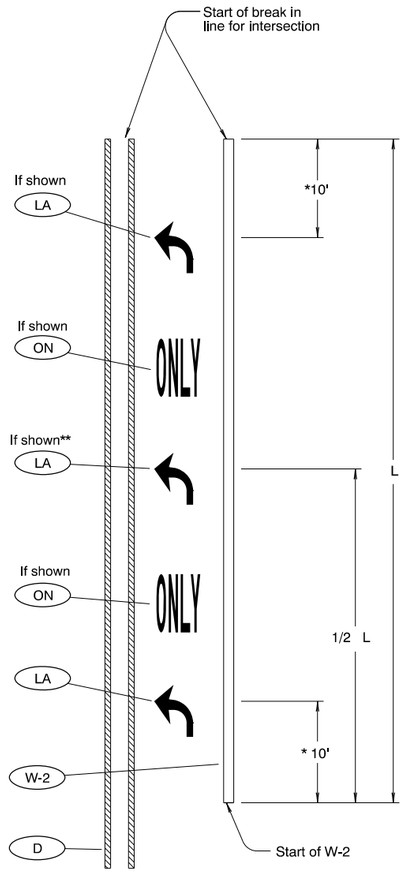

LANE USE ARROW PLACEMENT FOR TURN LANE

DETAIL "A"

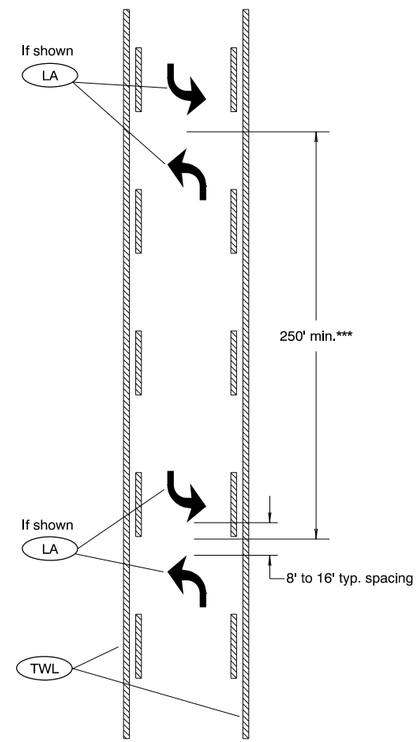

TWO-WAY LEFT TURN LANE ARROW PLACEMENT

DETAIL "B"

General Notes:

1.) Center pavement marking legends within the lane.

2.) Placement of lane use arrows with respect to the 8" wide white line (W-2) channelization shown in Detail "A" applies to both left and right turn lanes.

3.) Center "ONLY" markings between lane use arrows.

* 15' when installing elongated arrows.

** When L is greater than 400', install 3rd lane use arrow at ½ L as shown in Detail "A".

*** Double arrows to be placed at even intervals, proportioned within block or as shown.

To be accompanied by Standard Dwg. Nos. TM500 thru TM503

CALC. BOOK NO. N/A

BASELINE REPORT DATE 12/16/2011

NOTE: All material and workmanship shall be in accordance with the current Oregon Standard Specifications

The selection and use of this Standard Drawing, while designed in accordance with generally accepted engineering principles and practices, is the sole responsibility of the user and should not be used without consulting a Registered Professional Engineer.

OREGON STANDARD DRAWINGS

TURN ARROW MARKING DETAILS

2015

DATE	REVISION DESCRIPTION

TM531.dgn 07-01-2015

TM531

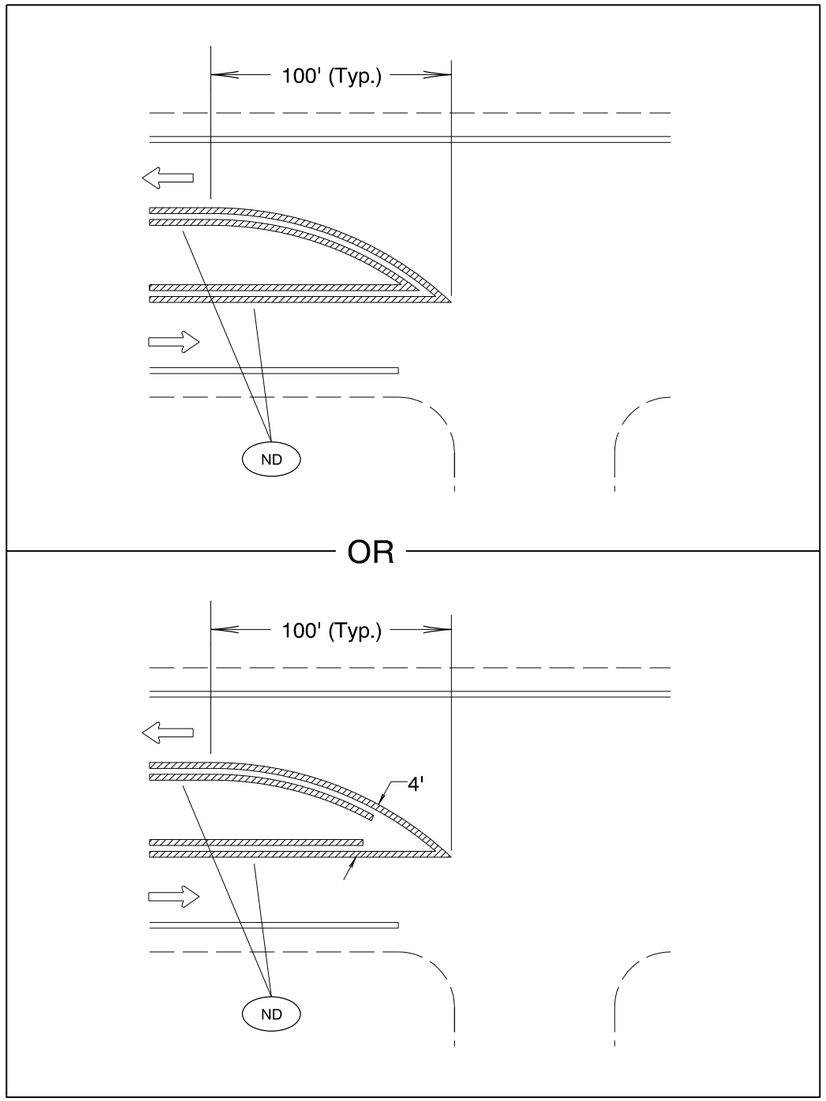

MEDIAN BULLNOSE DETAIL

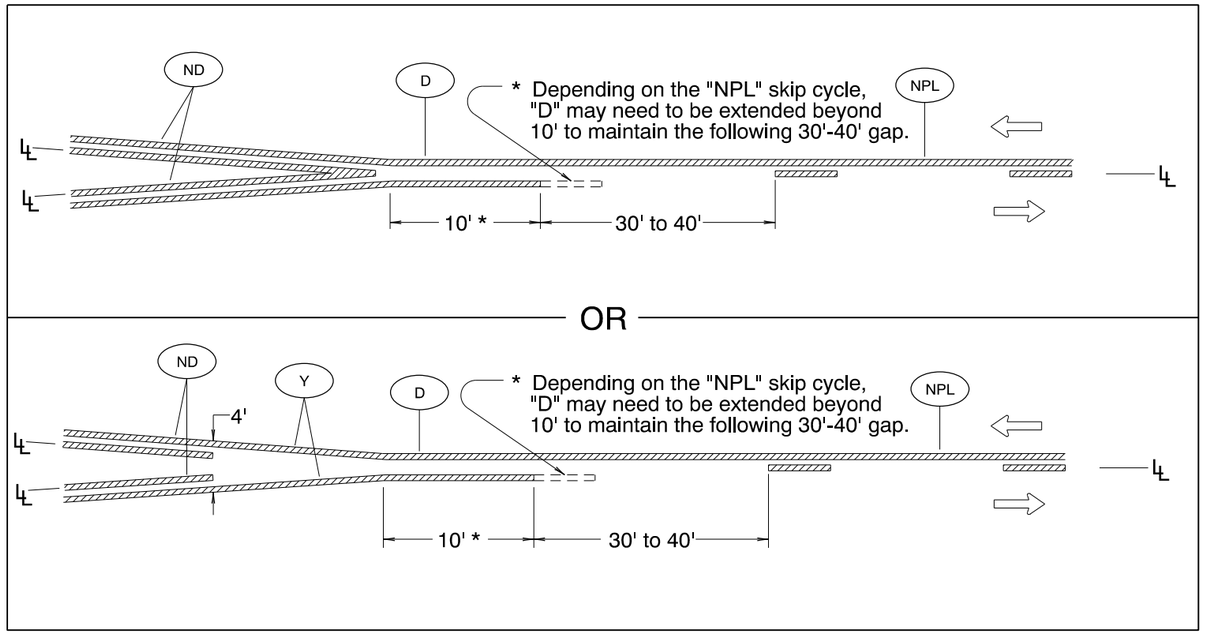

MEDIAN WIDTH TRANSITION

(TWO NARROW DOUBLE YELLOW LINES TO ONE-DIRECTION NO-PASSING LINE)

To be accompanied by Standard Dwg. Nos. TM500 thru TM503

CALC. BOOK NO. N/A

BASELINE REPORT DATE 07/01/2015

NOTE: All material and workmanship shall be in accordance with the current Oregon Standard Specifications

The selection and use of this Standard Drawing, while designed in accordance with generally accepted engineering principles and practices, is the sole responsibility of the user and should not be used without consulting a Registered Professional Engineer.

OREGON STANDARD DRAWINGS

MEDIAN AND LEFT TURN CHANNELIZATION DETAILS

2015

DATE	REVISION DESCRIPTION
07/2015	Modified Lane Line alignment for Median Width Transition detail.

LEGEND

Increasing stationing from left to right

Direction of Travel

Lane line dimensions are shown on the striping plans

TM539.dgn 07-01-2015

TM539

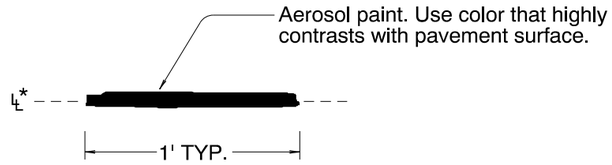

CONTROL POINT

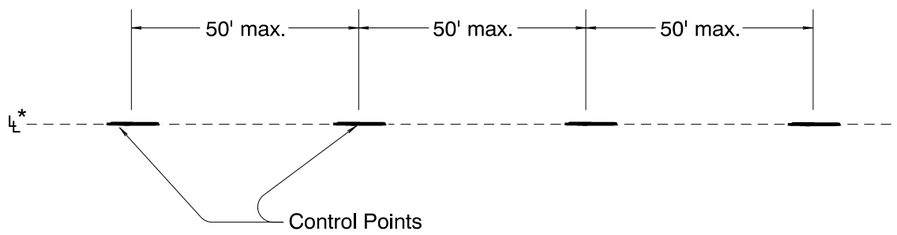

CONTROL POINT LAYOUT - TANGENT SECTIONS

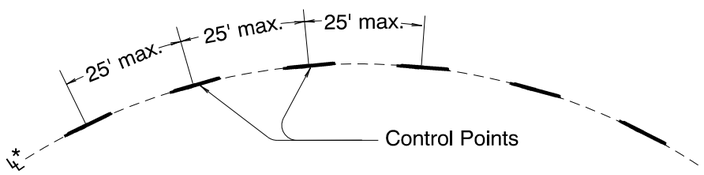

CONTROL POINT LAYOUT - CURVE SECTIONS

General note:

1.) Use control points to make continous narrow guideline as specified.

* Control points are placed along the lane line for all longitudinal lines except the following:

ND — For center lines only	A control point layout 4" offset from the lane line is required for a ND line when used as a center line.

To be accompanied by Standard Dwg. Nos. TM500 thru TM503

CALC. BOOK NO. N/A

BASELINE REPORT DATE 07/01/2015

NOTE: All material and workmanship shall be in accordance with the current Oregon Standard Specifications

The selection and use of this Standard Drawing, while designed in accordance with generally accepted engineering principles and practices, is the sole responsibility of the user and should not be used without consulting a Registered Professional Engineer.

OREGON STANDARD DRAWINGS

ALIGNMENT LAYOUT: GENERAL

2015

DATE	REVISION DESCRIPTION
07/2015	Modified Lane Line alignment notes.

LEGEND

℄ — Lane line dimensions are shown on the striping plans.

TM560.dgn 07-01-2015

TM560

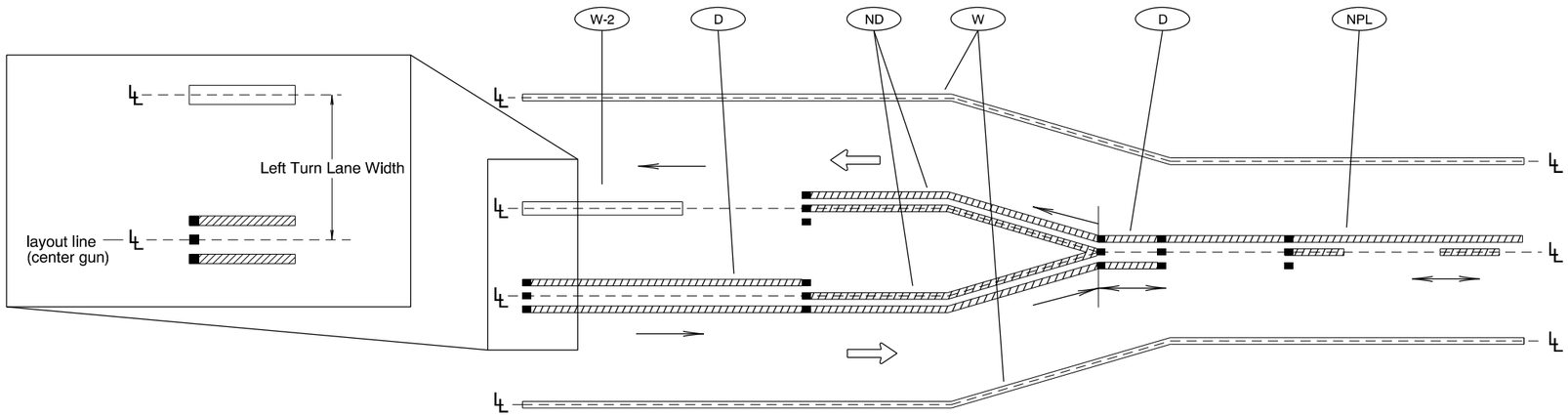

LEFT TURN LANE ALIGNMENT LAYOUT

General note:

1.) Install control points for pavement marking alignment layout along the center gun location.

2.) Increasing stationing from left to right

LEGEND

Direction Of Travel and Thru Traffic Side.

Lane line dimensions are shown on the striping plans.

Direction of striping truck (may go either direction)

Direction of striping truck (may go one direction only)

Three gun installation system (center dot represents center gun)

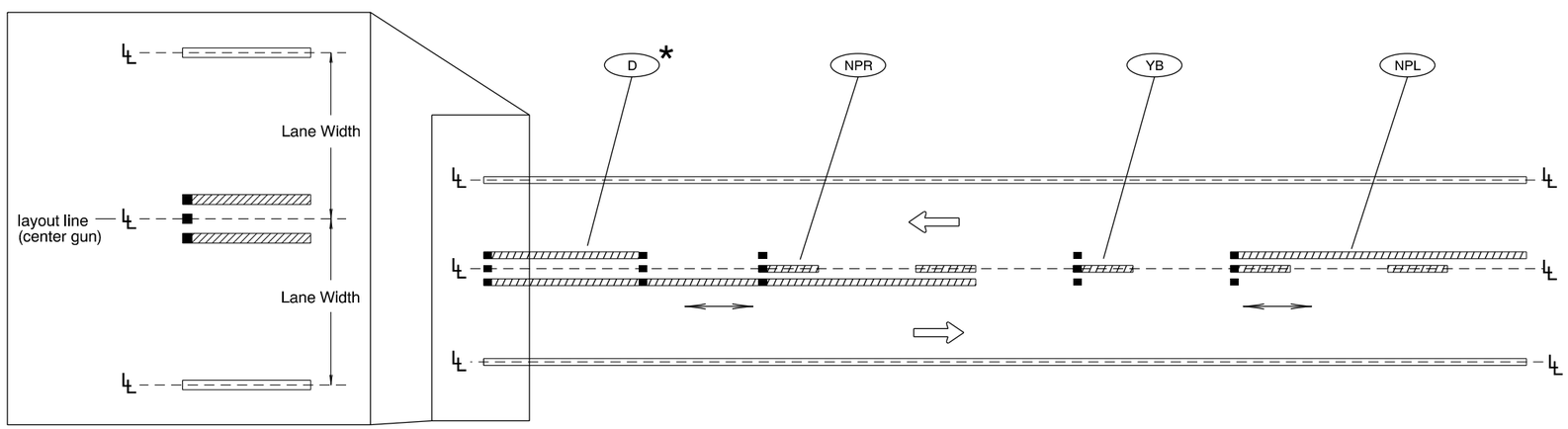

CENTERLINE ALIGNMENT LAYOUT

* When ND is used as centerline markings, a control point layout 4" offset from the lane line is required.

Line Types requiring control points to be 4" offset from lane line:

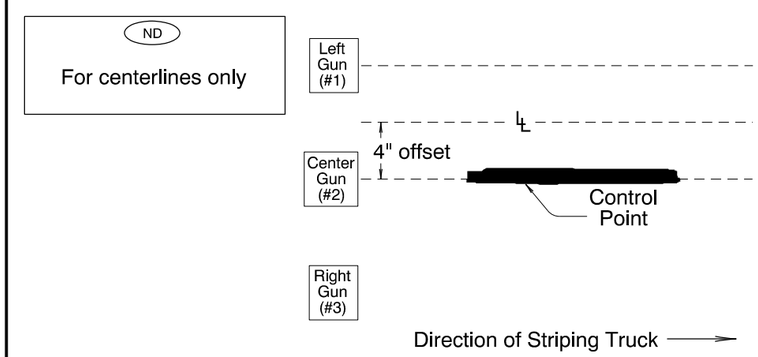

4" Offset of Lane Line and Center Gun

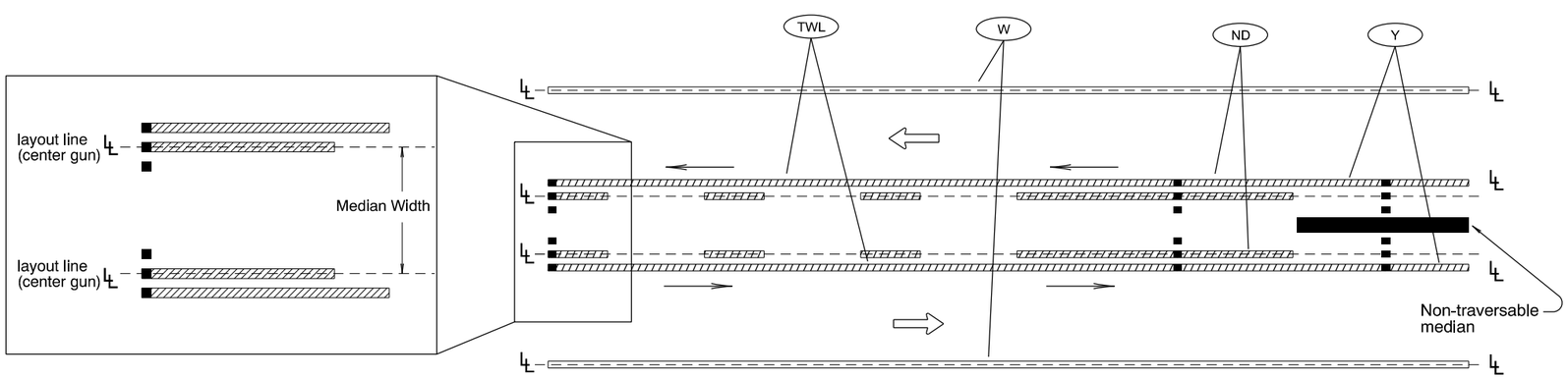

MEDIAN ALIGNMENT LAYOUT

To be accompanied by Standard Dwg. Nos. TM500 thru TM503

CALC. BOOK NO. N/A

BASELINE REPORT DATE 07/01/2015

NOTE: All material and workmanship shall be in accordance with the current Oregon Standard Specifications

The selection and use of this Standard Drawing, while designed in accordance with generally accepted engineering principles and practices, is the sole responsibility of the user and should not be used without consulting a Registered Professional Engineer.

OREGON STANDARD DRAWINGS

ALIGNMENT LAYOUT:
LEFT TURN LANE, CENTERLINE & MEDIANS

2015

DATE	REVISION DESCRIPTION
07/2015	Modified Lane Line alignment for Left Turn Lane and Median layouts.

TM561.dgn 07-01-2015

TM561

R:\SECURE\STANDARD DRAWINGS\2015Standards\15 June\plotfile_TM500s.dgn :: Default 7/1/2015 4:00:14 PM hwyr30c

Effective Date: December 1, 2015 - May 31, 2016

tm602.dgn 09-JAN-2015

DETAIL A

No Scale

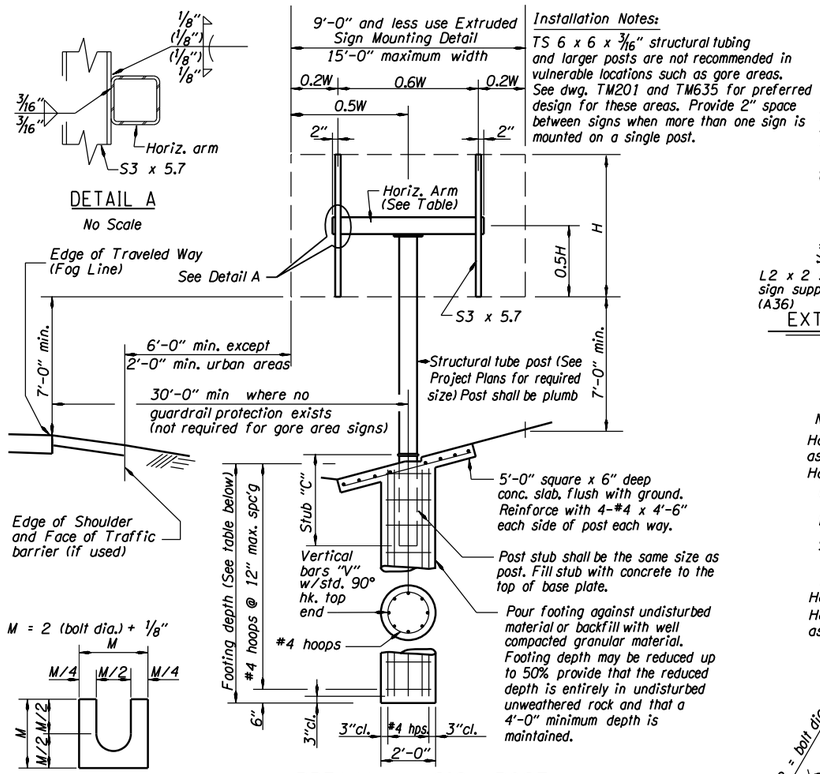

Installation Notes:

TS 6 x 6 x 3/16" structural tubing and larger posts are not recommended in vulnerable locations such as gore areas. See dwg. TM201 and TM635 for preferred design for these areas. Provide 2" space between signs when more than one sign is mounted on a single post.

BREAKAWAY SIGN POST

No Scale

BRASS SHIM DETAIL

Provide 2 @ 0.012" thick and 2 @ 0.032" thick at each bolt.

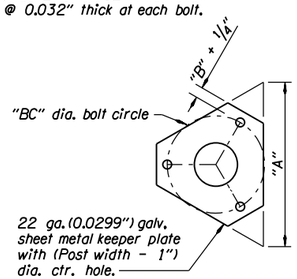

KEEPER

No Scale

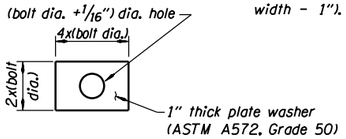

PLATE WASHER "H"

No Scale

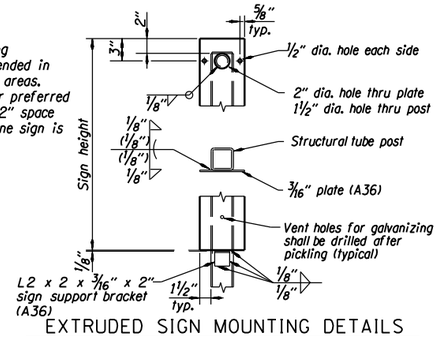

EXTRUDED SIGN MOUNTING DETAILS

No Scale

For signs 9'-0" or less in width

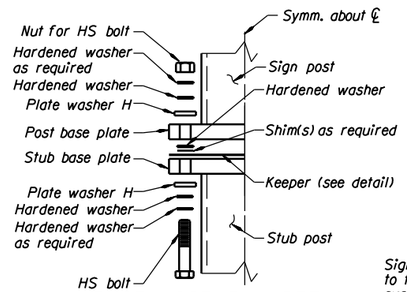

BASE ASSEMBLY DETAIL

No Scale

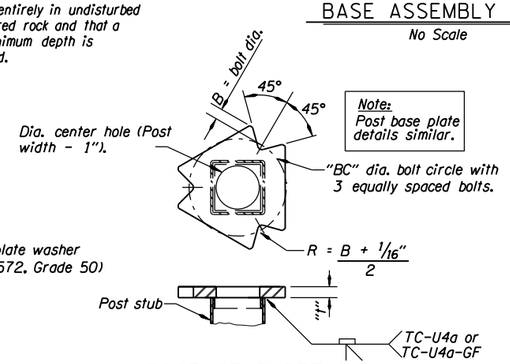

POST STUB DETAILS

No Scale

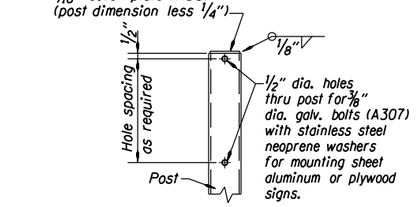

SIGN MOUNTING DETAILS FOR PLYWOOD & SHEET ALUMINUM SIGNS

No Scale

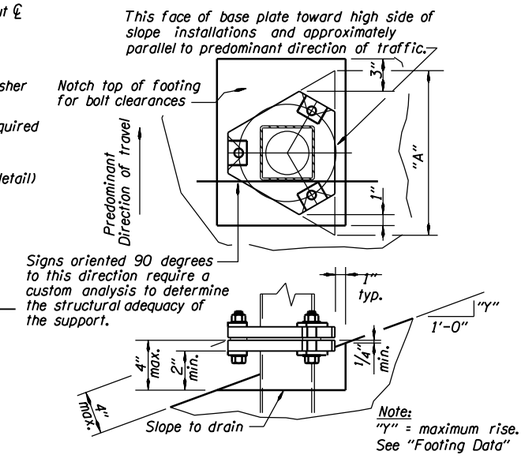

BASE PLATE ORIENTATION

No Scale

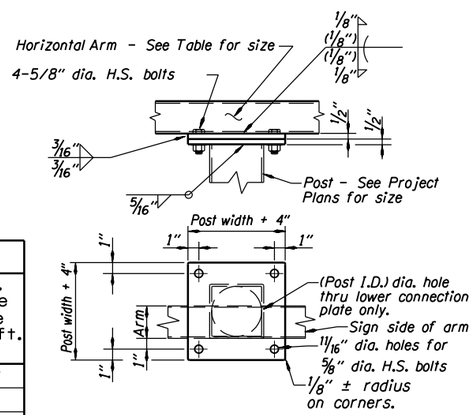

HORIZONTAL ARM TO POST CONNECTION DETAIL

No Scale

GENERAL NOTES:

1. Sign supports are designed in accordance with the AASHTO Standard Specifications for Structural Supports for Highway Signs, Luminaires, and Traffic Signals 1994. Use a wind velocity with a 10-year mean reccurrence interval.
2. All concrete shall be Commercial Grade Concrete (f'c = 3000 psi)
3. All reinforcing steel shall conform to AASHTO Specification M31, Grade 60, or ASTM A706.
4. The following splice lengths shall be used unless otherwise shown:

Bar Size	#4	#5
Splice Length (mm)	1'-1"	1'-5"

5. Structural steel shall conform to AASHTO M223 (ASTM A572) Grade 50, unless shown otherwise.
6. Structural tubing shall conform to ASTM Specification A500, Grade B, or A501.
7. Shims shall be fabricated from brass shim stock conforming to ASTM B36.
8. All bolts shall be high strength bolts conforming to to ASTM Specification A325 (AASHTO M164). Nuts for high strength bolts shall be well lubricated heavy hexagon nuts conforming to ASTM Specification A563, (AASHTO M291), Grade DH. Hardened steel washers shall conform to ASTM Specification F436 (AASHTO M293).
9. Steel sheet for keepers shall conform to ASTM Specification A653.
10. Base plate holes shall be sub-drilled and reamed to size. Base plate slot shall be saw cut or machine guided flame cut.
11. Keeper sheet metal shall be galvanized in accordance with ASTM A653, Coating G165. All other steel including fasteners shall be hot-dip galvanized after fabrication. Remove galvanizing runs and beads on all slip surfaces. Nuts for high strength bolts may be retapped after galvanizing.
12. The use of post larger than required by design will not be permitted.
13. See Dwg. TM675 for sign and sign mounting details.

BASE PLATE BOLTING PRODEDURE:

1. Assemble post to stub as shown in Base Assembly Detail.
2. Shim as required to plumb post. (+/-1/16"/vert. 12") (2 shims maximum per bolt)
3. Tighten bolts in a systematic order to the "T1" ft-lbs torque.
4. Loosen and retighten bolts to the "T2" ft-lbs torque. Use the same order as the intitial tightening and DO NOT OVER TIGHTEN!
5. Burr threads at junction with nut using a center punch.

Structural Tubing Post and Post Stub Size	Structural Tubing Horiz. Arm (if req'd)	Slip Base Data: Base Plate "t"	Base Plate "A"	Bolt: Dia. "B"	Length	Circle "BC"	"T1" ft-lbs torque	"T2" ft-lbs torque	Num. of additional washers	Footing Data: Post Stub Length	Vert. Reinf. Bars "V"	Footing Depth 2'-0" Dia.	Footing Depth 4'-0" Dia.	Max. Slope Rise per ft. "Y"
TS 3 x 3 x 3/16	TS 3 x 3 x 3/16	3/4"	10"	1/2"	5"	6"	50	30	2	1'-6"	8-#4	3'-0"	—	6.3"
TS 3 1/2 x 3 1/2 x 3/16	TS 3 x 3 x 3/16	3/4"	11 5/8"	5/8"	5"	6 3/4"	150	50	-	1'-9"	8-#4	3'-6"	—	5.5"
TS 4 x 4 x 3/16	TS 3 x 3 x 3/16	1"	1'-0 3/8"	5/8"	5 1/2"	7 1/2"	150	50	-	2'-0"	8-#4	4'-0"	—	5.2"
TS 5 x 5 x 3/16	TS 3 x 3 x 3/16	1"	1'-2 5/8"	3/4"	5 1/2"	9"	280	70	-	2'-3"	8-#4	4'-6"	4'-0"	4.4"
TS 6 x 6 x 3/16	TS 3 x 3 x 3/16	1 1/4"	1'-4 7/8"	7/8"	6 1/2"	10 1/2"	450	75	1	2'-6"	8-#5	5'-0"	4'-0"	3.8"
TS 7 x 7 x 3/16	TS 4 x 4 x 3/16	1 1/4"	1'-6 1/4"	7/8"	6 1/2"	12"	450	75	1	3'-0"	8-#5	6'-0"	4'-6"	3.5"
TS 8 x 8 x 3/16	TS 5 x 5 x 3/16	1 3/8"	1'-8 1/2"	1"	7"	1'-1 1/2"	680	75	1	3'-6"	12-#5	7'-0"	5'-0"	3.1"

CALC. BOOK NO.	BASELINE REPORT DATE	ACCOMPANIED BY DWGS.	SHEET
1493	09-JAN-2015	TM200, TM201, TM635, TM675	1 OF 1

NOTE: All material and workmanship shall be in accordance with the current Oregon Standard Specifications

The selection and use of this Standard Drawing, while designed in accordance with generally accepted engineering principles and practices, is the sole responsibility of the user and should not be used without consulting a Registered Professional Engineer.

OREGON STANDARD DRAWINGS

TRIANGULAR BASE BREAKAWAY MULTI-DIRECTIONAL SLIP BASE DESIGN

2015

DATE	REVISION DESCRIPTION
1/15	Added Baseline Report date and updated 90 degree sign orientation note.

TM602

Effective Date: December 1, 2015 - May 31, 2016

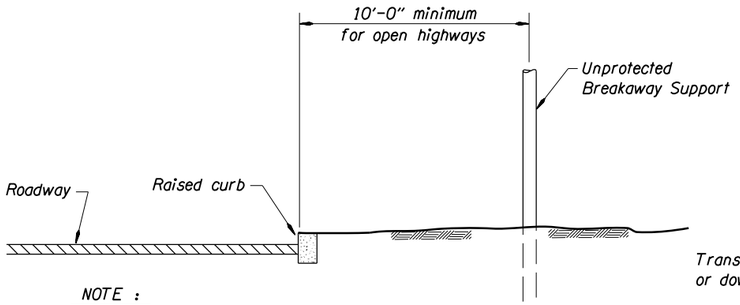

NOTE :

Locate supports far enough behind curb to allow vehicle to stabilize before impacting support.

BREAKAWAY SUPPORTS BEHIND RAISED CURBS

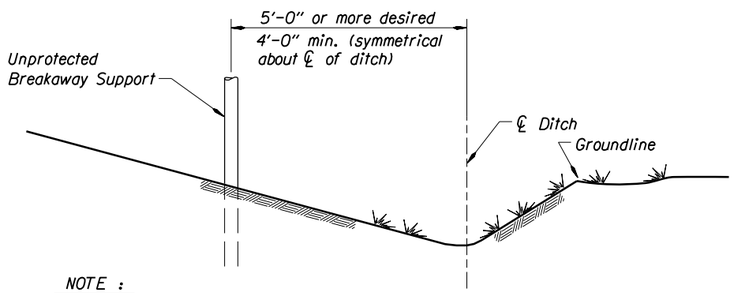

NOTE :

Locate breakaway supports away from ditches to avoid problems with erosion, corrosion, debris, maintenance, and breakaway performance.

BREAKAWAY SUPPORTS NEAR DITCHES

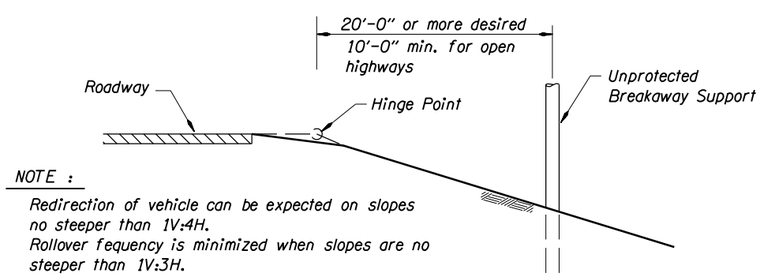

NOTE :

Redirection of vehicle can be expected on slopes no steeper than 1V:4H.
Rollover fequency is minimized when slopes are no steeper than 1V:3H.

Locate support beyond hinge point as shown to allow vehicle to stabilize before impact.

BREAKAWAY SUPPORT ON FILL SLOPE

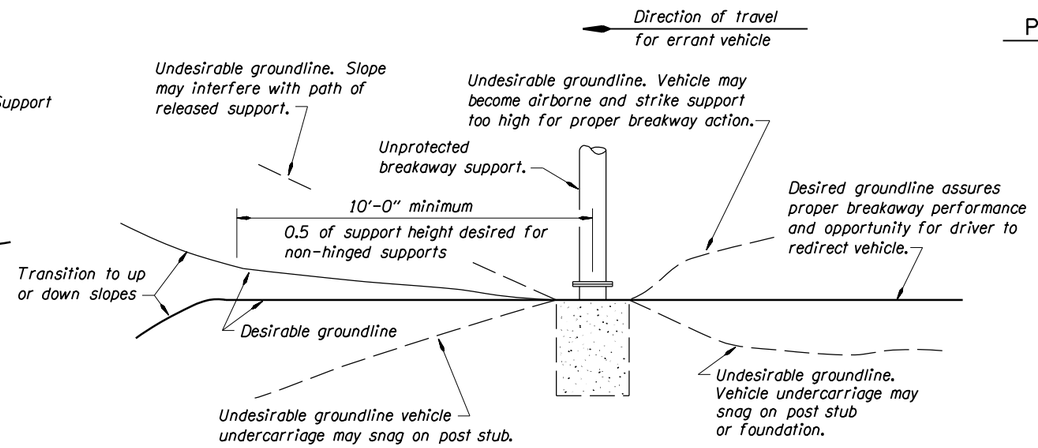

BREAKAWAY SUPPORT - PARTIAL ELEVATION

(Along possible paths of errant vehicles)

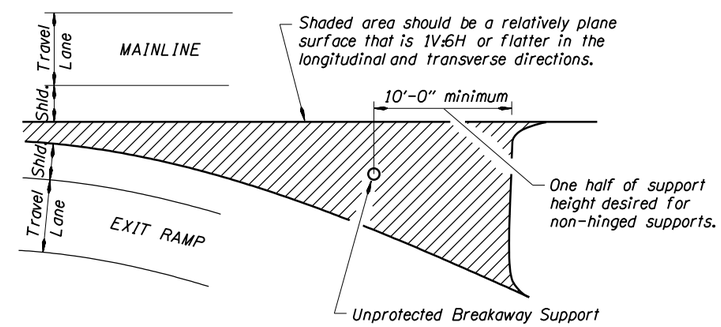

GORE AREA BREAKAWAY SUPPORT LOCATION

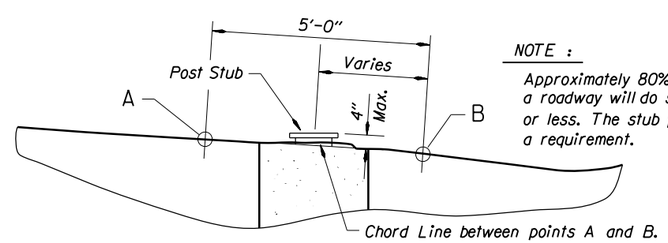

NOTE :

Approximately 80% of vehicles leaving a roadway will do so at an angle of 15° or less. The stub projection limitation is a requirement.

UNPROTECTED BREAKAWAY SUPPORT CLEARANCE DIAGRAM

Section perpendicular to assumed path of errant vehicle. (Most likely path is a 15° angle from adjacent traffic flow)

PLACEMENT OF UNPROTECTED BREAKAWAY SUPPORTS:

The location of unprotected breakaway supports with respect to the travel lane(s) and the roadside terrain and other geometric conditions over which the vehicle travels before impacting the support will affect the support's breakaway performance.

Breakaway supports located in gore areas are particularly vulnerable to vehicle impacts. Breakaway supports located across tee intersections, at the end of lane drop or on the outside of horizontal curves are also likely to be struck. Locating breakaway supports in these areas should be avoided if possible. If the breakaway support must be located in these areas, locate them to produce an impact situation that is as forgiving as possible while assuring adequate recovery space beyond the support(s).

Breakaway supports placed up on cut slopes generally result in a safer impact situation than for those placed down on fill slopes. The support placed on a cut slope will be lighter than a support placed on fill slope. The momentum of a vehicle traversing a cut slope will generally be less than that for a vehicle traversing a fill slope. A vehicle going up a cut slope is generally more stable and more easily redirected than a vehicle going down a fill slope.

Placement of breakaway supports in or near ditches should be avoided. Breakaway supports should not be located near raised curbs or near the hinge point ot the fill slope.

Where possible, supports should be located behind established barriers.

The guidelines contained herein should be used if possible. However, adjustments to the guidelines may be necessary because of right-of-way and/or other constraints.

See TM200 requirements when signs are mounted on unprotected Breakaway Supports.

CALC. BOOK NO.	BASELINE REPORT DATE	ACCOMPANIED BY DWGS.	SHEET
	06-JUL-2015		1 OF 1

NOTE: All material and workmanship shall be in accordance with the current Oregon Standard Specifications

The selection and use of this Standard Drawing, while designed in accordance with generally accepted engineering principles and practices, is the sole responsibility of the user and should not be used without consulting a Registered Professional Engineer.

OREGON STANDARD DRAWINGS

BREAKAWAY SIGN & LUMINAIRE SUPPORTS - SUPPORT LOCATION GUIDELINES

2015

DATE	REVISION DESCRIPTION
07/15	Added baseline report date, 5'-0" dim. line was horizontal, and added 1V:6H or flatter.

tm635.dgn 06-JUL-2015

TM635

STANDARD SIGNAL ARM LOADS							
Signal Pole Type	Signal Arm Length	Signals			Sign		DS Max. for S2
		4L Qty.	2 Qty.	5 * Qty.	S1 Qty.	S2 * Qty.	
SM1 or SM1L	15′	1	0	1	2	0	N/A
SM2 or SM2L	20′	1	1	1	3	0	N/A
	25′	1	1	1	3	0	
SM3 or SM3L	30′	1	1	1	3	1	9′-1″
	35′	1	1	1	3	1	
SM4 or SM4L	40′	1	2	1	4	1	11′-1″
	45′	1	2	1	4	1	
SM5 or SM5L	50′	1	2	1	4	1	21′-1″
	55′	1	2	1	4	1	

* – Load location is the closest sign or signal of that type to the vertical post.

1. Camera mounted on 6 ft arm placed at any location on signal arm.
2. Fire Pre-Emption may be placed at any location along the mast arm.
3. Loads stated in the table produce reactions as shown in tables on TM651. Modifications to the loading shown require analysis to verify the structural adequacy of the pole.
4. Physical fit of the loading must be verified.

SIGNAL ARMS DEFLECTION		
Signal Arm Length "SA"	Allowable Dead Load Deflection	Allowable Total Load Deflection
15′ or less	0.01″SA″	0.05″SA″
20′	2½″	12″
25′	3½″	15″
30′	5″	21″
35′	7″	29″
40′	9½″	38″
45′	1′-½″	48″
50′	1′-4″	60″
55′	1′-8″	74″

VERTICAL POST LOADS								
Description	Maximum Centerline Elevation	Height (Each)	Width (Each)	Depth (Each)	Area Front (sq. ft)	Area Side (sq. ft)	Area Bottom (sq. ft)	Weight 0″ Ice (lbs)
2-Ped. Push Buttons	3′-6″	7¾″	5″	3⅜″	0.27	0.18	0.12	3.0
Controller Cabinet	5′-9″	46″	24″	22″	7.67	7.03	3.67	300
2-Pedestrian Signals	8′-3½″	18¾″	19″	19″	2.47	2.47	2.51	25.0
Terminal Cabinet	10′-9″	18⅛″	6¾″	8⅜″	0.85	1.05	0.39	25.0
Guide Sign (S3)	15′-0″	72″	120″	8⅜″	60.0	1.00	1.67	395
Photoelectric Cell	38′-4″	2¼″	3¼″	3¼″	0.05	0.05	0.07	5.0

1. Physical fit of the loading must be verified.

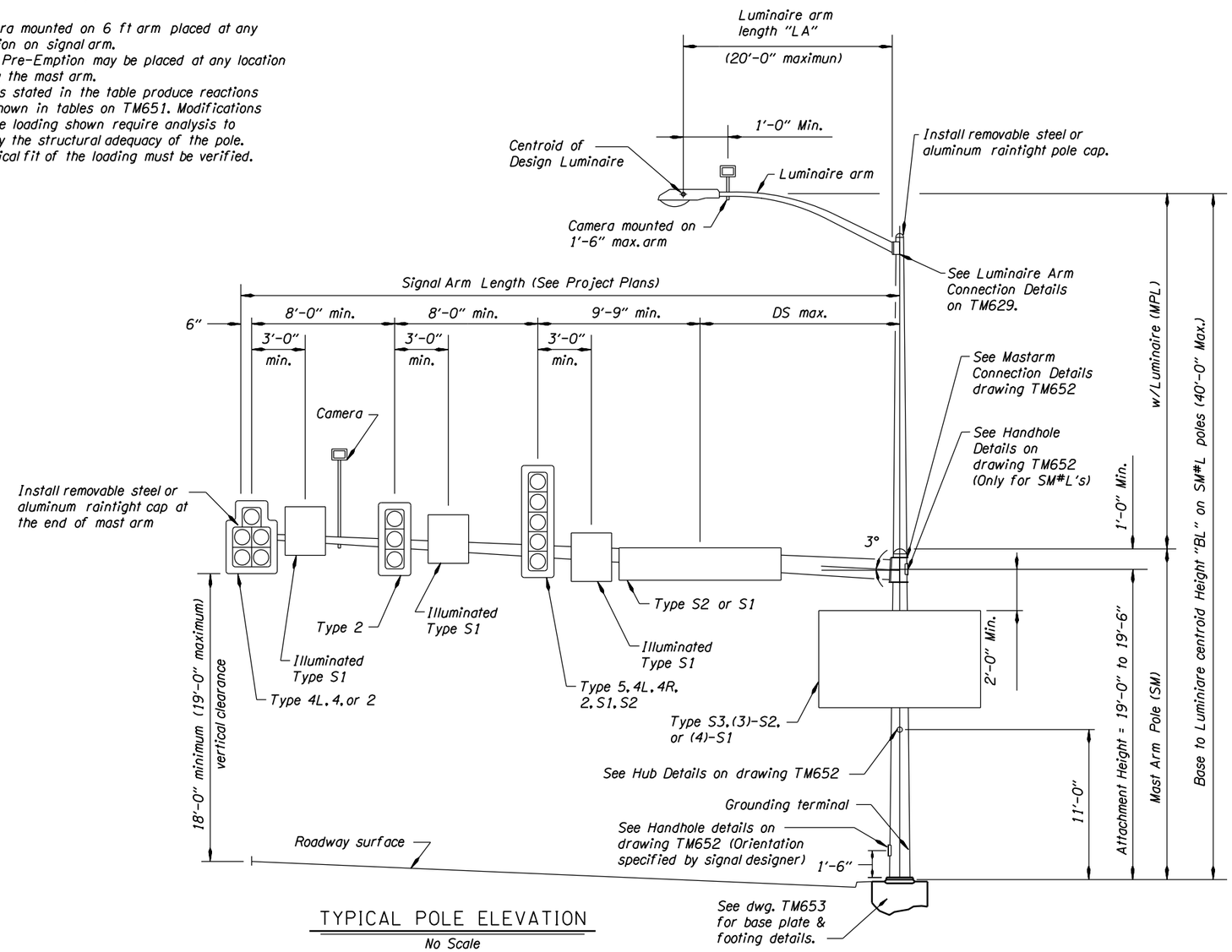

TYPICAL POLE ELEVATION

No Scale

SIGNAL POLE APPURTENANCE TYPES

APPURTENANCE LOADS				
Type	Area Front (sq. ft)	Area Side (sq. ft)	Area Bottom (sq. ft)	Weight 0″ Ice (lbs)
4L	12.4	6.61	3.64	145
2	8.67	6.61	1.95	85.0
4	11.0	8.49	1.95	97.0
5	13.3	10.36	1.95	142
S1	7.50	2.38	1.72	71.0
S2	21.0	0.00	1.67	105

CALC. BOOK NO.	BASELINE REPORT DATE	ACCOMPANIED BY DWGS.	SHEET
5301	07-JAN-2011	TM651, TM652, TM653, TM679	1 OF 4

NOTE: All material and workmanship shall be in accordance with the current Oregon Standard Specifications

The selection and use of this Standard Drawing, while designed in accordance with generally accepted engineering principles and practices, is the sole responsibility of the user and should not be used without consulting a Registered Professional Engineer.

OREGON STANDARD DRAWINGS
TRAFFIC SIGNAL SUPPORTS
GENERAL DETAILS & DESIGN CRITERIA

2015

DATE	REVISION DESCRIPTION

tm650.dgn 11-JUL-2014

TM650

tm651.dgn 11-JUL-2014

GENERAL NOTES:

1. Signal supports shall be designed in accordance with the AASHTO Standard Specifications for Structural Supports for Highway Signs, Luminaires and Traffic Signals 4th edition, 2001, 2002, and 2003 interim revisions.
2. All traffic signal supports shall conform to the design criteria and details shown on these drawings except as approved by the Engineer.
3. The design basic wind speed (3 second gust) shall be 110 mph, gust factor G = 1.14, Ir = 1.0 (50 yr recurrence interval), Fatigue Category II, no galloping, and truck speed = 55 mph.
4. Signal poles from this standard are not allowed over highways I-5, I-84, I-205, I-405, US 26 (Sunset Hwy) between mile points 64.3 - 73.0, I-105, and I-82. Signal poles on these highways require a Fatigue Category I.
5. Pole and arm shafts may be either round, hexdecagonal, dodecagonal, or octagonal but shapes shall not be mixed on a project. Dimensional tolerances of ASTM A595 shall apply to all tapered steel tubing members. Additionally, the diameter of round tapered steel tubing members or the dimensions across the flats of octagonal tapered steel tubing members shall not vary more than 2% from specified dimension. Two ply and fluted poles or arms are not permitted.
6. Pole taper shall be equal to .0117 in/in.
7. Anchor rods shall conform to ASTM Specification F1554 Gr. 55, Supplemenetary Requirement "S2" that include grade and manufacturer's identification.
8. High strength bolts shall conform to ASTM Specification A325 Type 1.
9. Nuts for high strength bolts shall be heavy hex and conform to ASTM A563 Grade DH with supplmentary requirements "S1" and "S2".
10. Hardened steel washers shall conform to ASTM F436 Type 1.
11. Direct Tension Indicators (DTI) shall be the compressible-washer type, mechanically galvanized, conforming to ASTM F959.
12. Steel sheet for poles and arm shall conform ASTM A595, Grades A or B, ASTM A572 Gr. 50, or approved equal. All other steel sheet and plate shall conform to AASHTO specification M223 (ASTM A572), or approved equal. Supplement S18 of ASTM A6 regarding maximum tensile strength shall apply.
13. All structural steel including fasteners shall be hot dip galvanized after fabrication unless otherwise noted.
14. Galvanize-Control Silicon, typical. Silicon content of the base metal shall be in the range of 0 to 0.04% or 0.15 to 0.25%.
15. Footing concrete shall be Commercial Grade Concrete (fc=3000 psi) per Specification Section 440. Grout in grout pad shall be non-shrink high early strength grout (non-ferrous) with a minimum strength of 5000 psi. Footing concrete may be used as an alternate to grout.
16. Reinforcing steel shall conform to AASHTO M31, Grade 60 (ASTM A615 or A706). A min. lap splice length of 32 bar diameters shall be used unless shown otherwise.
17. Computed deflection of these poles at full design loading shall be limited to 5% of the pole length. Computed dead load deflection of the poles shall be limited to 1% of the pole length. Pole shall be raked to offset the computed dead load deflection. Computed deflection (ignoring pole bending and/or rotation) of signal arms shall not exceed that listed in the Signal Arm Deflection Table on TM650. Additionally, the amplitude (maximum up to maximum down as measured at the tip of the arm) of wind induced vertical oscillations shall not exceed 1.5% of the signal arm length. Luminaire arms and pole extensions to support luminaire arms shall meet requirements of drawing TM629.
18. Hubs for cabinets and/or other appurtenances shall be welded into the pole prior to galvanizing. Poles may be tapped for up to 1" galvanized bolts after pole has been galvanized.
19. Longitudinal seam welds within 6" of a cirumferential weld shall be complete penetration welds. Weld inspection shall be in accordance with AWS D1.1 and the special provisions. Inspect seam welds using cyclically loaded criteria. Hubs shall be 3000# threaded forged carbon steel flat weld hubs by Anvil Products Inc., Phoenix Forging Co., Bonney Forge & Tool Works or approved equal.
20. Grounding terminal shall be ½" UNC x 1½" Type 308, 309 or 310 threaded stainless steel weld studs.
21. Tighten 4 bolt arm connection bolts and tighten anchor rods in accordance with 962.46(jX2).
22. Tighten 8 bolt arm connection bolts in accordance with 930.40(d).
23. Round and smooth all edges along electrical way.
24. The Minimum arm flange thickness shall be equal to the value where prying action is not included in the bolt calculation.

Standard Maximum Base Reactions

Signal Pole Type	Signal Arm Lengths	Wind Load Case II				Controlling Fatigue		
		Axial (Kips)	Shear (Kips)	Moment (Kip-ft)	Torque (Kip-ft)	Shear (Kips)	Moment (Kip-ft)	Torque (Kip-ft)
SM1	15'	2.10	5.15	80.39	16.95	0.68	10.39	2.13
SM2	20', 25'	2.66	6.23	105.41	42.54	0.82	13.35	5.37
SM3	30', 35'	3.49	7.77	138.43	82.87	1.00	17.10	10.31
SM4	40', 45'	4.51	9.00	173.46	132.72	1.16	20.54	16.50
SM5	50', 55'	5.69	9.23	190.91	181.60	1.18	21.62	22.55
SM1L	15'	2.96	6.09	113.28	23.22	0.79	14.08	2.84
SM2L	20', 25'	3.69	7.23	139.41	48.81	0.94	17.17	6.08
SM3L	30', 35'	4.39	8.80	176.51	87.88	1.14	21.43	11.02
SM4L	40', 45'	5.94	10.14	215.11	136.97	1.31	25.27	17.21
SM5L	50', 55'	7.34	10.56	241.17	187.96	1.34	26.49	23.26

Standard Maximum Mast Arm Reactions

Signal Pole Type	Signal Arm Lengths	Wind Load Case II			Controlling Fatigue	
		Axial (Kips)	Shear (Kips)	Moment (Kip-ft)	Shear (Kips)	Moment (Kip-ft)
SM1, SM1L	15'	0.06	1.98	18.44	0.23	2.18
SM2, SM2L	20', 25'	0.10	3.14	46.20	0.37	5.48
SM3, SM3L	30', 35'	0.15	4.51	89.42	0.53	10.51
SM4, SM4L	40', 45'	0.23	5.91	146.67	0.67	16.82
SM5, SM5L	50', 55'	0.34	6.78	211.94	0.70	22.99

Luminaire Arm Reactions

Arm Lengths	Wind Load Case II			Controlling Fatigue	
	Axial (Kips)	Shear (Kips)	Moment (Kip-ft)	Shear (Kips)	Moment (Kip-ft)
6'	0.03	0.31	1.49	0.03	0.15
10'	0.06	0.38	2.85	0.04	0.29
15'	0.08	0.47	4.96	0.05	0.51
20'	0.05	0.55	7.24	0.06	0.74

CALC. BOOK NO.	BASELINE REPORT DATE	ACCOMPANIED BY DWGS.	SHEET
5301	07-JAN-2011	TM650, TM652, TM653	2 OF 4

NOTE: All material and workmanship shall be in accordance with the current Oregon Standard Specifications

The selection and use of this Standard Drawing, while designed in accordance with generally accepted engineering principles and practices, is the sole responsibility of the user and should not be used without consulting a Registered Professional Engineer.

OREGON STANDARD DRAWINGS

TRAFFIC SIGNAL SUPPORTS NOTES AND REACTIONS

2015

DATE	REVISION DESCRIPTION

TM651

POLE AND ARM SPLICE WELD DETAILS

No Scale

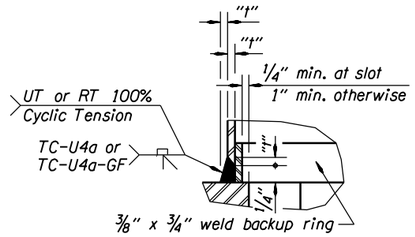

TC-U4a WELD DETAIL

No Scale

Mast arm Connection				
Signal Arm Lengths	N Number	D Bolt Diam.	BC Bolt Circle	V Bolt Spacing
15'	4	1"	9 1/2"	——
20', 25'	4	1 1/4"	14"	——
30', 35'	4	1 1/2"	15 1/2"	——
40', 45'	8	1 "	——	5"
50', 55'	8	1 1/4"	——	6"

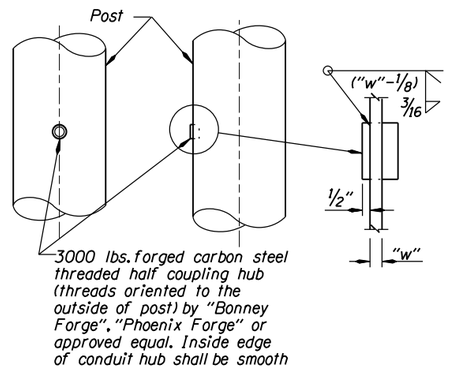

HUB WELD DETAIL

No Scale

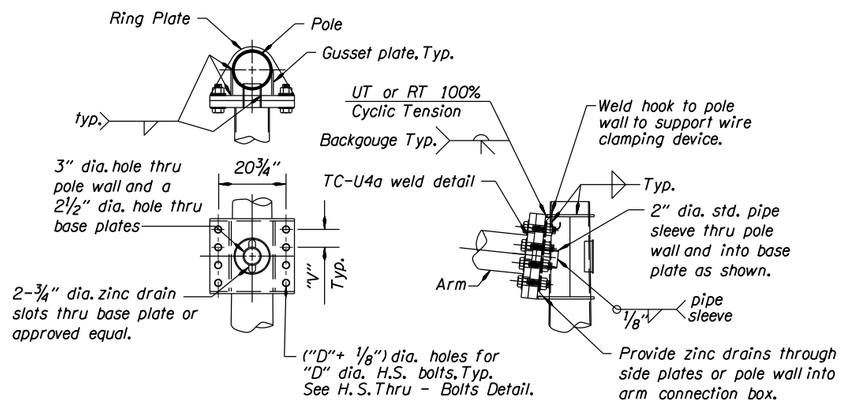

8 BOLT ARM CONNECTION DETAILS

No Scale

ARM CONNECTION NOTES:

Gusset plates are 1/4" min. thickness.

Ring plates are 3/8" min. thickness.

See general notes on TM651 for bolt tightening.

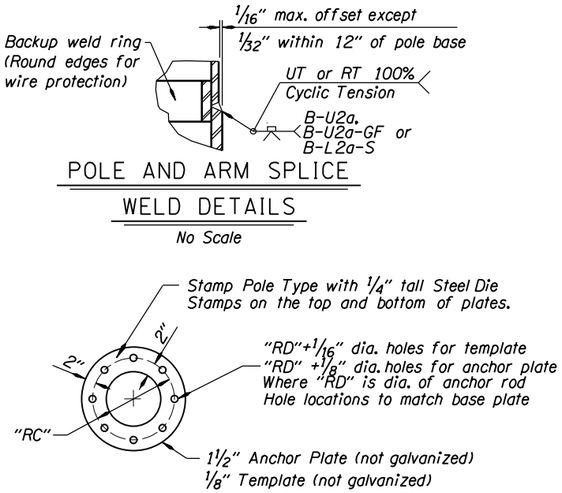

ANCHOR PLATE AND TEMPLATE DETAIL

No Scale

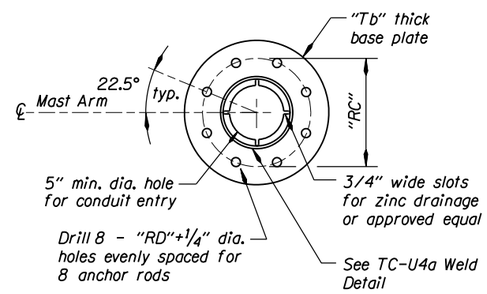

PLAN - BASE PLATE

No Scale

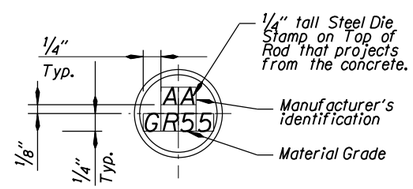

Note: The end of each anchor rod shall be color coded yellow.

ANCHOR ROD STAMP DETAIL

No Scale

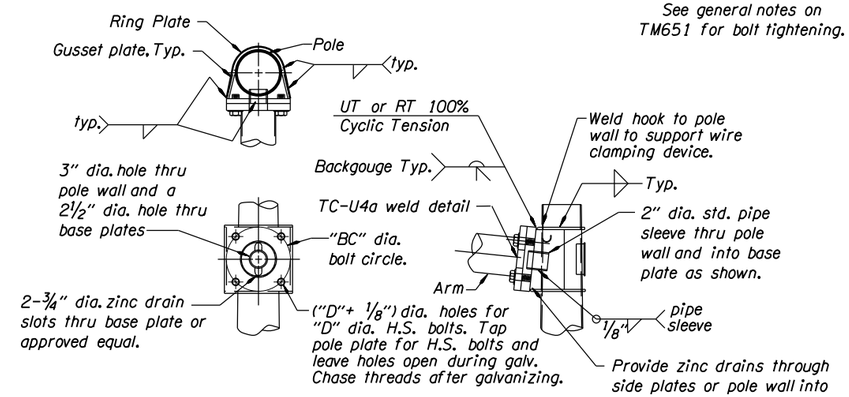

4 BOLT ARM CONNECTION DETAILS

No Scale

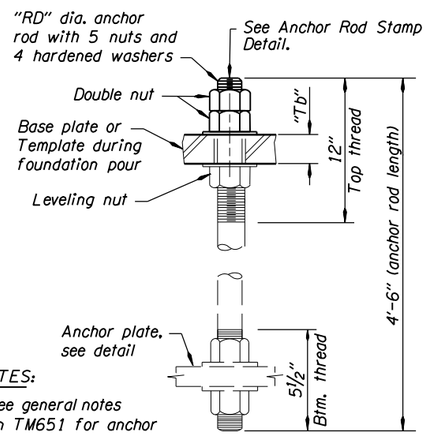

NOTES:

- See general notes on TM651 for anchor rod tightening.
- "Tb" determined by manufacturer.

ANCHOR ROD DETAIL

No Scale

Anchor Rods and Base Plate Data			
Mastarm Pole Type	Strain Pole Type	RD Rod Diam.	RC Rod Circle
SM1	-----	1 1/4"	16 1/2"
SM2, SM1L	-----	1 1/2"	17"
SM3, SM2L	STP1, STP1L, STP2, STP2L	1 1/2"	20"
SM4, SM3L	STP3, STP3L, STP4, STP4L	1 3/4"	22"
SM5, SM4L	-----	1 3/4"	23"
SM5L	STP5, STP5L, STP6, STP6L, STP7, STP7L	2"	23 1/2"

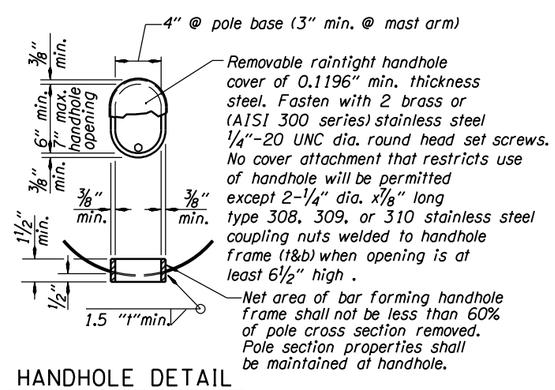

HANDHOLE DETAIL

No Scale

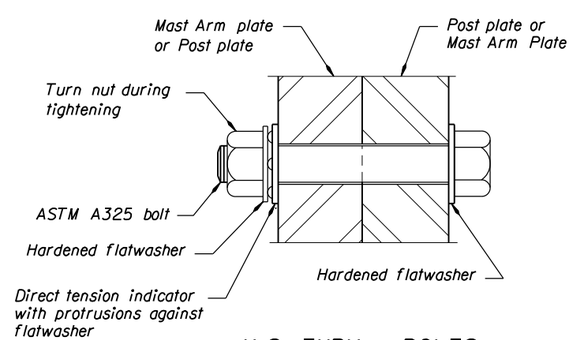

H.S. THRU - BOLTS

No Scale

CALC. BOOK NO.	BASELINE REPORT DATE	ACCOMPANIED BY DWGS.	SHEET
5301	10-JAN-2014	TM650, TM651, TM653	3 OF 4

NOTE: All material and workmanship shall be in accordance with the current Oregon Standard Specifications

The selection and use of this Standard Drawing, while designed in accordance with generally accepted engineering principles and practices, is the sole responsibility of the user and should not be used without consulting a Registered Professional Engineer.

OREGON STANDARD DRAWINGS

TRAFFIC SIGNAL SUPPORTS STEEL DETAILS

2015

DATE	REVISION DESCRIPTION

Standard Foundations						
Foundation Number	Mastarm Pole Types	Strain Pole Types	"FD" Diameter Min.	Vertical Rebar	Hoop Size and Spacing	Hoop Lap Length
1	SM1	-----	36"	8-#8	#4 at 6"	18"
2	SM2, SM1L	-----	36"	8-#8	#4 at 6"	18"
3	SM3, SM2L	STP1, STP1L	36"	8-#8	#4 at 6"	18"
4	SM4, SM3L	STP2, STP2L	42"	10-#8	#5 at 6"	21"
5	SM5, SM4L	STP3, STP3L	42"	10-#9	#5 at 6"	21"
6	SM5L	STP4, STP4L	42"	10-#9	#5 at 6"	21"
7	-----	STP5, STP5L	42"	TBD	TBD	TBD
8	-----	STP6, STP6L	42"	TBD	TBD	TBD
9	-----	STP7, STP7L	42"	TBD	TBD	TBD

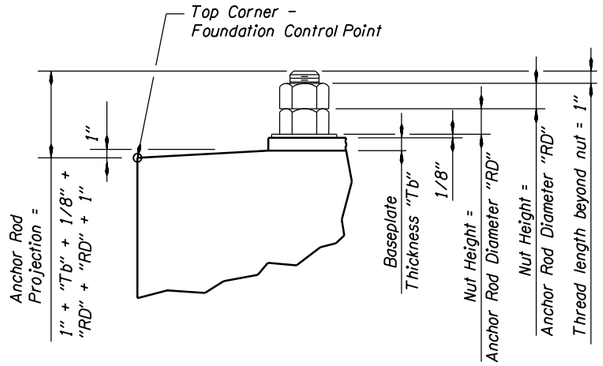

PROJECTION DETAIL

No Scale

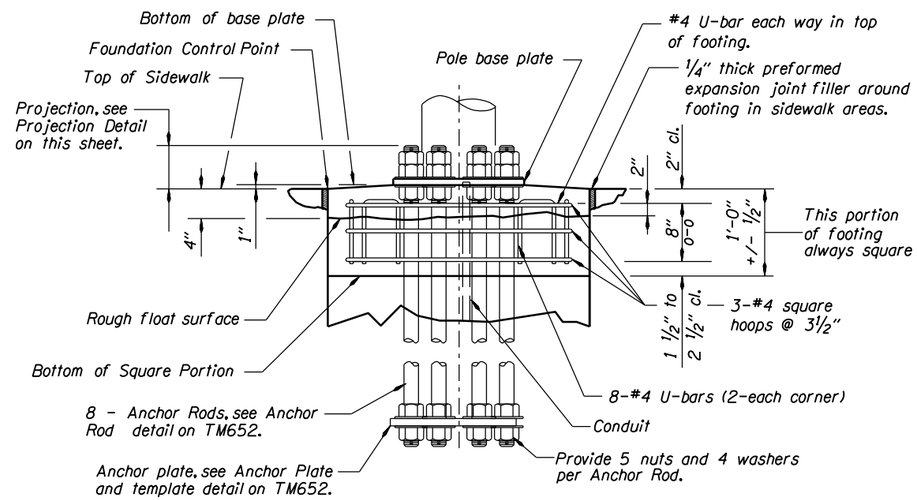

ELEVATION - TOP OF FOOTING

No Scale

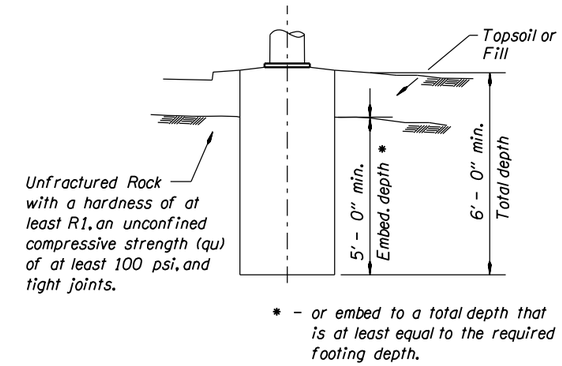

ROCK INSTALLATION REQUIREMENTS

No Scale

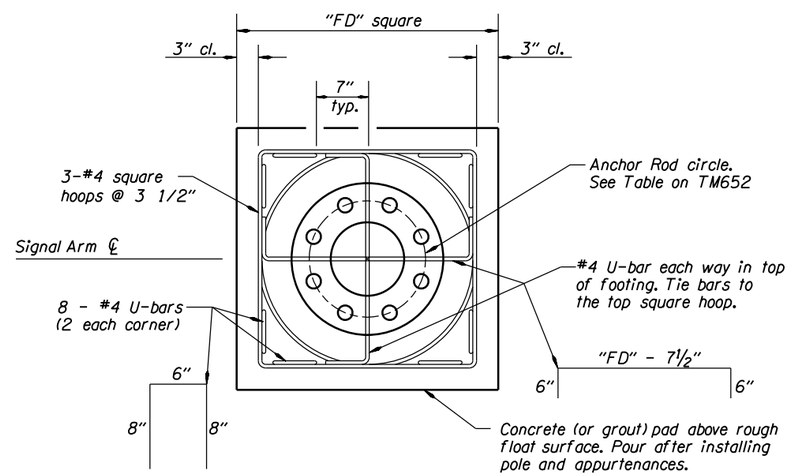

PLAN - TOP OF FOOTING

No Scale

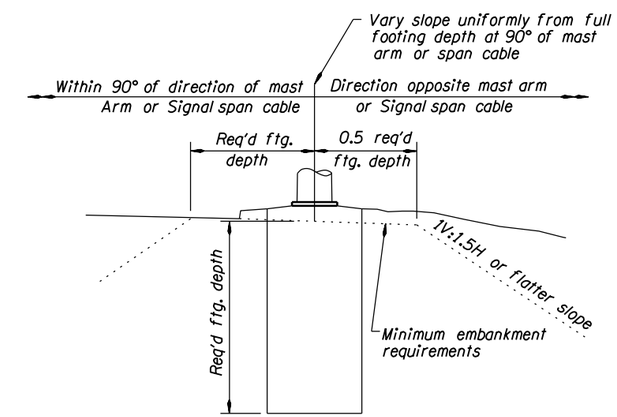

MINIMUM EMBANKMENT REQUIREMENTS

No Scale

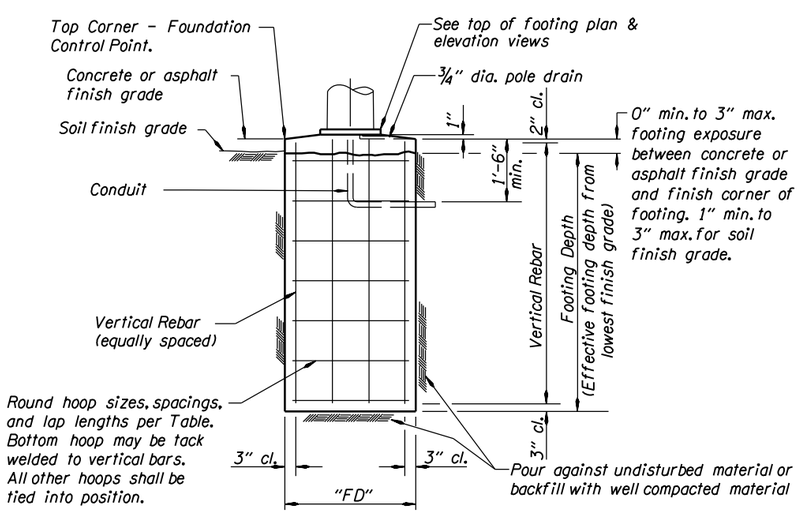

TYPICAL FOOTING ELEVATION

No Scale

NOTES:

See TM651 for general notes.
The pier torsional forces have been designed according to the ACI 318.
Shafts 7,8, and 9 do not include torsion rebar.

CALC. BOOK NO.	BASELINE REPORT DATE	ACCOMPANIED BY DWGS.	SHEET
5323	10-JAN-2014	TM650, TM651, TM652	4 OF 4

NOTE: All material and workmanship shall be in accordance with the current Oregon Standard Specifications

The selection and use of this Standard Drawing, while designed in accordance with generally accepted engineering principles and practices, is the sole responsibility of the user and should not be used without consulting a Registered Professional Engineer.

OREGON STANDARD DRAWINGS

TRAFFIC SIGNAL SUPPORTS FOUNDATION REQUIREMENTS

2015

DATE	REVISION DESCRIPTION

tm653.dgn 11-JUL-2014

TM653

tm660.dgn 11-JUL-2014

LOADING NOTES:

1. Fire Pre-Emption may be placed at any location along the span.
2. Loads stated in the table produce reactions as shown in tables on TM651. Modifications to the loading shown require analysis to verify the structural adequacy of the pole.
3. Physical fit of the loading must be verified.
4. Include wind area and weight for appurtanance supports between the messenger and tether cables. Accomodate enough vertical space for a type 5 signal.

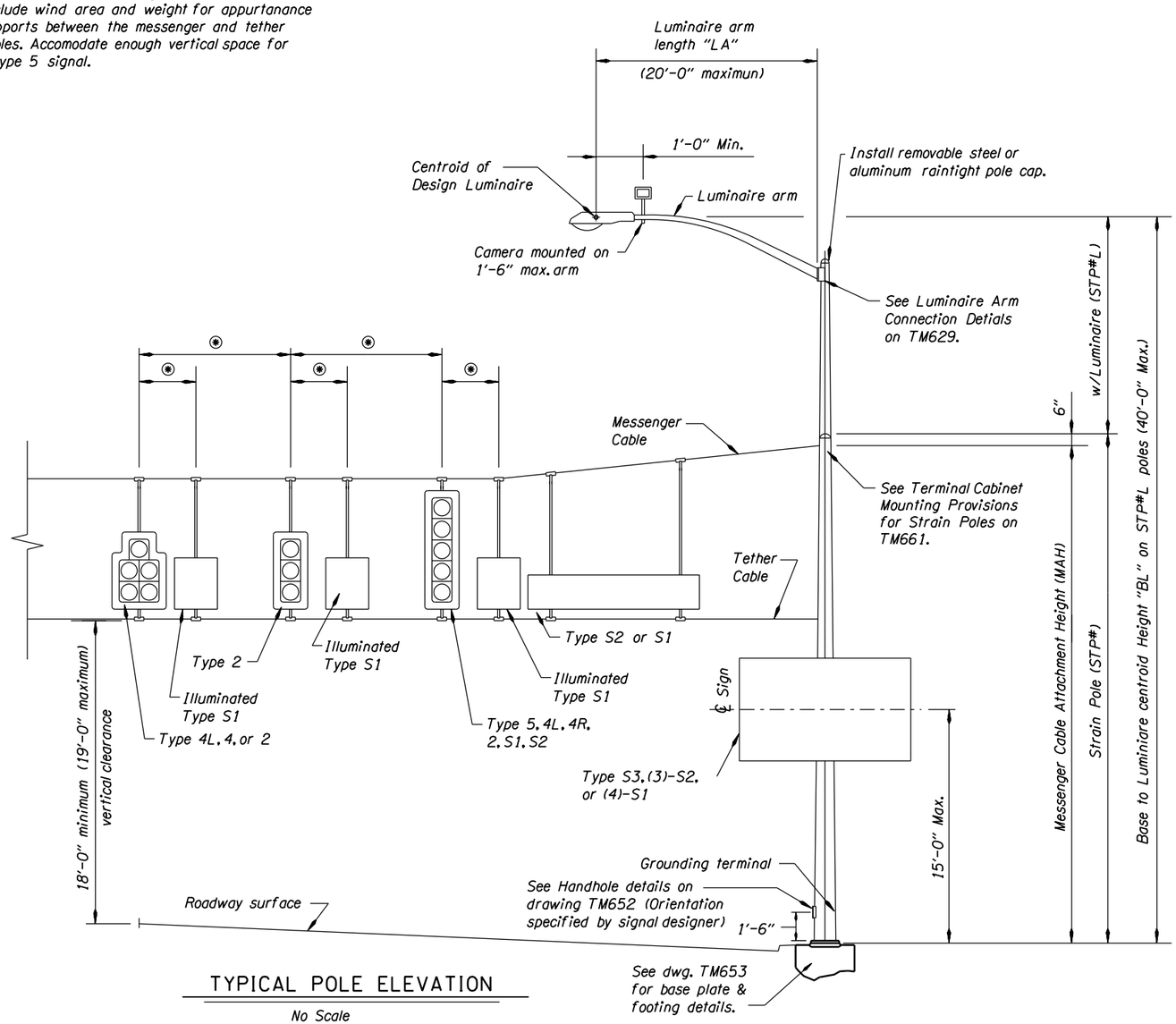

TYPICAL POLE ELEVATION

No Scale

⊛ - As shown on project plans.

VERTICAL POST LOADS								
Description	Maximum Centerline Elevation	Height (Each)	Width (Each)	Depth (Each)	Area Front (sq. ft)	Area Side (sq. ft)	Area Bottom (sq. ft)	Weight 0" Ice (lbs)
2-Ped. Push Buttons	3'-6"	7¾"	5"	3⅜"	0.27	0.18	0.12	3.0
Controller Cabinet	5'-9"	46"	24"	22"	7.67	7.03	3.67	300
2-Pedestrian Signals	8'-3½"	18¾"	19"	19"	2.47	2.47	2.51	25.0
Terminal Cabinet	32'-9"	18⅛"	6¾"	8⅜"	0.85	1.05	0.39	25.0
Guide Sign (S3)	15'-0"	72"	120"	8⅜"	60.0	1.00	1.67	395
Photoelectric Cell	38'-4"	2¼"	3¼"	3¼"	0.05	0.05	0.07	5.0

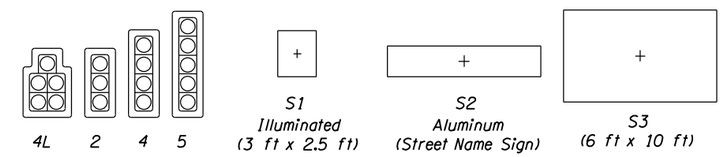

SIGNAL POLE APPURTENANCE TYPES

APPURTENANCE LOADS				
Type	Area Front (sq. ft)	Area Side (sq. ft)	Area Bottom (sq. ft)	Weight 0" Ice (lbs)
4L	12.4	6.61	3.64	145
2	8.67	6.61	1.95	85.0
4	11.0	8.49	1.95	97.0
5	13.3	10.36	1.95	142
S1	7.50	2.38	1.72	71.0
S2	21.0	0.00	1.67	105

CALC. BOOK NO.	BASELINE REPORT DATE	ACCOMPANIED BY DWGS.	SHEET
5345	07-JAN-2011	TM652, TM653, TM661	1 OF 2

NOTE: All material and workmanship shall be in accordance with the current Oregon Standard Specifications

The selection and use of this Standard Drawing, while designed in accordance with generally accepted engineering principles and practices, is the sole responsibility of the user and should not be used without consulting a Registered Professional Engineer.

OREGON STANDARD DRAWINGS
TRAFFIC STRAIN POLE SUPPORTS

GENERAL DETAILS & DESIGN CRITERIA
2015

DATE	REVISION DESCRIPTION

TM660

tm661.dgn 11-JUL-2014

GENERAL NOTES:

1. Signal supports shall be designed in accordance with the AASHTO Standard Specifications for Structural Supports for Highway Signs, Luminaires and Traffic Signals 4th edition, 2001, 2002, and 2003 interum revisions.
2. All traffic signal supports shall conform to the design criteria and details shown on these drawings except as approved by the Engineer.
3. The design basic wind speed (3 second gust) shall be 110 mph, gust factor G = 1.14, Ir = 1.0 (50 yr recurrence interval), and no fatigue design is required for strain poles.
4. Strain poles from this standard are not allowed over highways I-5, I-84, I-205, I-405, and US 26 (Sunset Hwy) between mile points 64.3 - 73.0.
5. Pole luminaire shafts may be either round, hexdecagonal, dodecagonal, or octagonal but shapes shall not be mixed on a project. Dimensional tolerances of ASTM A595 shall apply to all tapered steel tubing members. Additionally, the diameter of round tapered steel tubing members or the dimensions across the flats of octagonal tapered steel tubing members shall not vary more than 2% from specified dimension. Two ply and fluted poles or arms are not permitted.
6. Pole taper shall be equal to .0117 in/in.
7. Anchor rods shall conform to ASTM Specification F1554 Gr. 55, Supplemenetary Requirement "S2" that include grade and manufacturer's identification.
8. High strength bolts shall conform to ASTM Specification A325 Type 1.
9. Nuts for high strength bolts shall be heavy hex and conform to ASTM A563 Grade DH with supplmentary requirements "S1" and "S2".
10. Hardened steel washers shall conform to ASTM F436 Type 1.
11. Direct Tension Indicators (DTI) shall be the compressible-washer type, mechanically galvanized, conforming to ASTM F959.
12. Steel sheet for poles and arm shall conform ASTM A595, Grades A or B, ASTM A572 Gr. 50, or approved equal. All other steel sheet and plate shall conform to AASHTO specification M223 (ASTM A572), or approved equal. Supplement S18 of ASTM A6 regarding maximum tensile strength shall apply.
13. All structural steel including fasteners shall be hot dip galvanized after fabrication unless otherwise noted.
14. Galvanize-Control Silicon, typical. Silicon content of the base metal shall be in the range of 0 to 0.04% or 0.15 to 0.25%.
15. Footing concrete shall be Commercial Grade Concrete (fc=3000 psi) per Specification Section 440. Grout in grout pad shall be non-shrink high early strength grout (non-ferrous) with a minimum strength of 5000 psi. Footing concrete may be used as an alternate to grout.
16. Reinforcing steel shall conform to AASHTO M31, Grade 60 (ASTM A615 or A706). A min. lap splice length of 32 bar diameters shall be used unless shown otherwise.
17. Computed deflection of these poles at full design loading shall be limited to 5% of the pole length. Computed dead load deflection of the poles shall be limited to 1% of the pole length. Pole shall be raked to offset the computed dead load deflection. Luminaire arms and pole extensions to support luminaire arms shall meet requirements of drawing TM629.
18. Hubs for cabinets and/or other appurtenances shall be welded into the pole prior to galvanizing. Poles may be tapped for up to 1" galvanized bolts after pole has been galvanized.
19. Longitudinal seam welds within 6" of a cirumferential weld shall be complete penetration welds. Weld inspection shall be in accordance with AWS D1.1 and the special provisions. Inspect seam welds using cyclically loaded criteria. Hubs shall be 3000# threaded forged carbon steel flat weld hubs by Anvil Products Inc., Phoenix Forging Co., Bonney Forge & Tool Works or approved equal.
20. Grounding terminal shall be ½" UNC x 1½" Type 308, 309 or 310 threaded stainless steel weld studs.
21. Tighten anchor rods according to 962.46(jX2).
22. Round and smooth all edges along electrical way.

Allowable Span Wire Tension, Lbs. (Horizontal) ①②									
No Luminaire					With 20' max. Luminaire Arm and 40' max. Mounting Height				
POLE	MAH=28'	MAH=30'	MAH=32'	MAH=34'	POLE	MAH=28'	MAH=30'	MAH=32'	MAH=34'
STP1	2500	2330	2183	2053	STP1L	1663	1550	1450	1365
STP2	3750	3495	3275	3078	STP2L	2913	2715	2543	2390
STP3	5000	4660	4365	4105	STP3L	4163	3880	3635	3418
STP4	6250	5825	5458	5130	STP4L	5413	5045	4725	4443
STP5	7500	6993	6548	6158	STP5L	6663	6210	5818	5470
STP6	8750	8158	7640	7183	STP6L	7913	7375	6908	6495
STP7	10000	9333	8750	8235	STP7L	9163	8542	8002	7524

① MAH = Messenger cable Attachment Height.
② Group II Dead load and wind load span wire design tension.

1. Anchor Rods and pole details shall be according to TM652.
2. Foundation details shall be according to TM653.

Standard Design Base Reactions				
Strain Pole Type	Wind Load Case II			
	Axial (Kips)	Shear (Kips)	Moment (Kip-ft)	Torsion* (Kip-ft)
STP1, STP1L	2.49	6.66	132.8	6.70
STP2, STP2L	2.55	7.91	167.8	6.70
STP3, STP3L	3.06	9.33	205.9	6.70
STP4, STP4L	3.37	10.58	240.9	6.70
STP5, STP5L	3.43	11.95	277.9	6.70
STP6, STP6L	3.64	13.20	312.9	6.70
STP7, STP7L	4.54	14.45	347.9	6.70

* - Torsion is equal to 0 Kip-ft for STP Pole Types.

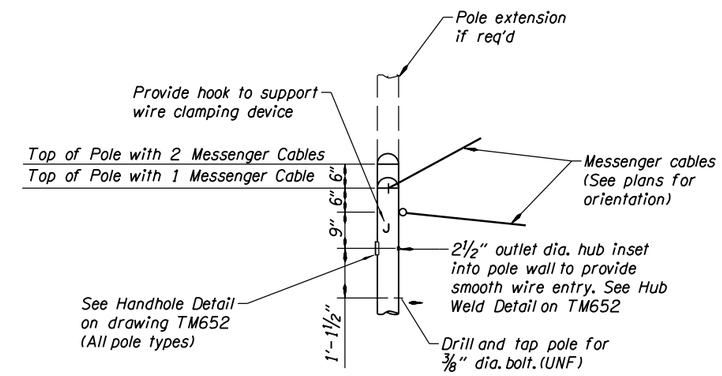

TERMINAL CABINET MOUNTING PROVISIONS FOR STRAIN POLES

Luminaire Arm Reactions			
Arm Lengths	Wind Load Case II		
	Axial (Kips)	Shear (Kips)	Moment (Kip-ft)
6'	0.03	0.31	1.49
10'	0.06	0.38	2.85
15'	0.08	0.47	4.96
20'	0.05	0.55	7.24

CALC. BOOK NO.	BASELINE REPORT DATE	ACCOMPANIED BY DWGS.	SHEET
5345	07-JAN-2011	TM652, TM653, TM660	2 OF 2

NOTE: All material and workmanship shall be in accordance with the current Oregon Standard Specifications

The selection and use of this Standard Drawing, while designed in accordance with generally accepted engineering principles and practices, is the sole responsibility of the user and should not be used without consulting a Registered Professional Engineer.

OREGON STANDARD DRAWINGS
TRAFFIC STRAIN POLE SUPPORTS

NOTES, REACTIONS, AND DETAILS
2015

DATE	REVISION DESCRIPTION

TM661

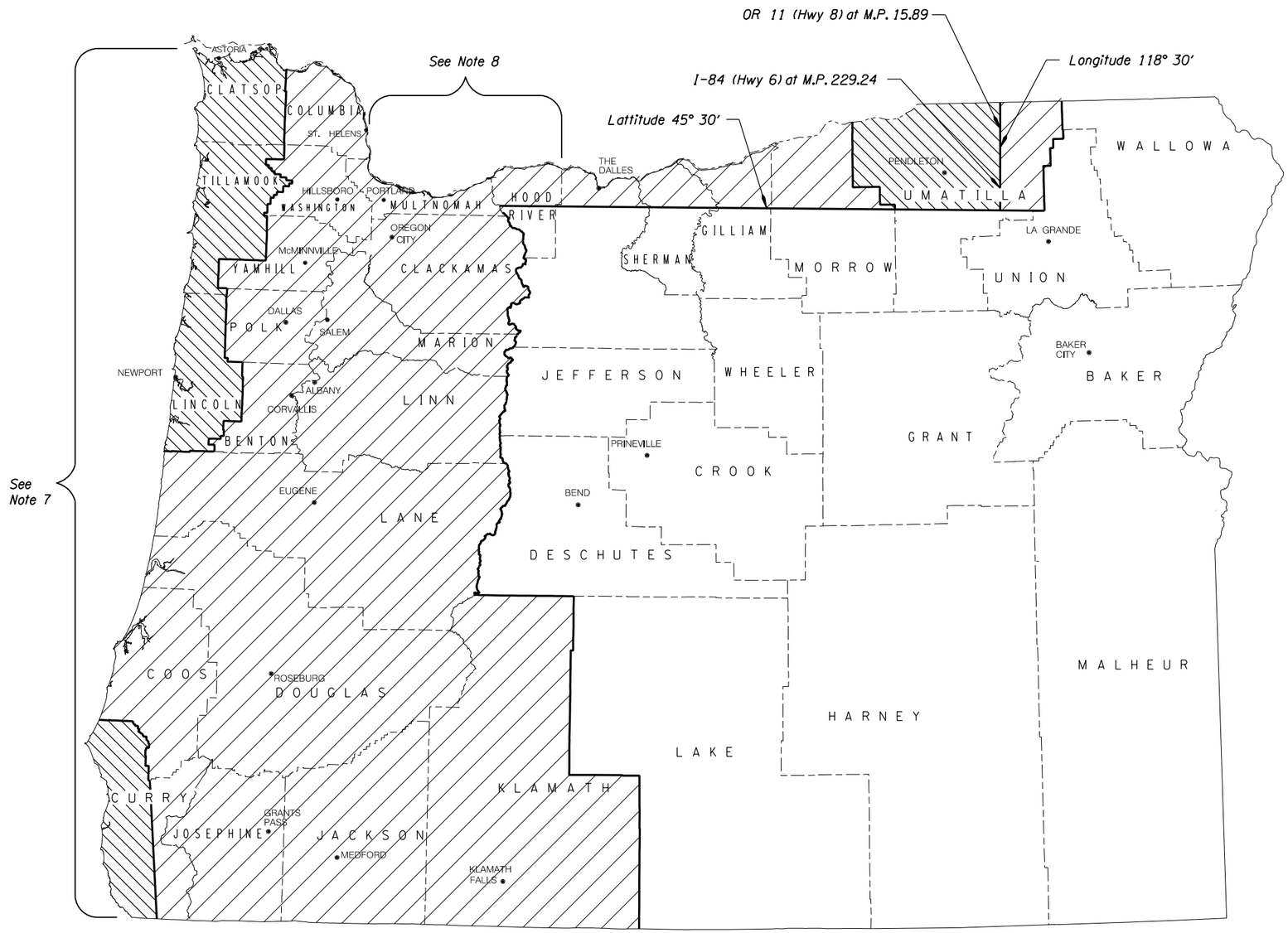

- 85 mph
- 95 mph
- 105 mph
- See notes 7 and 8 - 110 mph

NOTES:

1. The wind velocity map as shown is adapted from AASHTO 2001 4th Edition - "Standard Specifications for Structural Supports for Highway Signs, Luminaires and Traffic Signals", Appendix C, Figure C-3 and Section 3, Figure 3-2. It uses the wind speed map shown in Figure 1609 of the 2007 Oregon Structural Code to account for locations in the State with special wind regions.
2. The wind velocities shown above are 3-Second Gust wind velocities.
3. The Exposure Catagory is C.
4. The mean recurrence interval is 50-Years.
5. Mountanious terrain, gorges, and ocean promontories are classified as special wind regions and shall be examined for unusual wind conditions.
6. The Interval Height (Kz) is 30 ft.
7. All areas with full exposure to ocean winds shall be designated 110 mph areas.
8. Areas in Multnomah and Hood River counties with full exposure to Columbia River Gorge winds shall be designated 110 mph areas.
9. Localities may have adopted wind speed higher that shown on this map. Those higher wind speed shall be used.

CALC. BOOK NO.	BASELINE REPORT DATE	ACCOMPANIED BY DWGS.	SHEET
	06-JAN-2012		1 OF 1

NOTE: All material and workmanship shall be in accordance with the current Oregon Standard Specifications

The selection and use of this Standard Drawing, while designed in accordance with generally accepted engineering principles and practices, is the sole responsibility of the user and should not be used without consulting a Registered Professional Engineer.

OREGON STANDARD DRAWINGS

3 SECOND GUST WIND SPEED MAP

2015

DATE	REVISION DESCRIPTION

tm671.dgn 11-JUL-2014

TM671

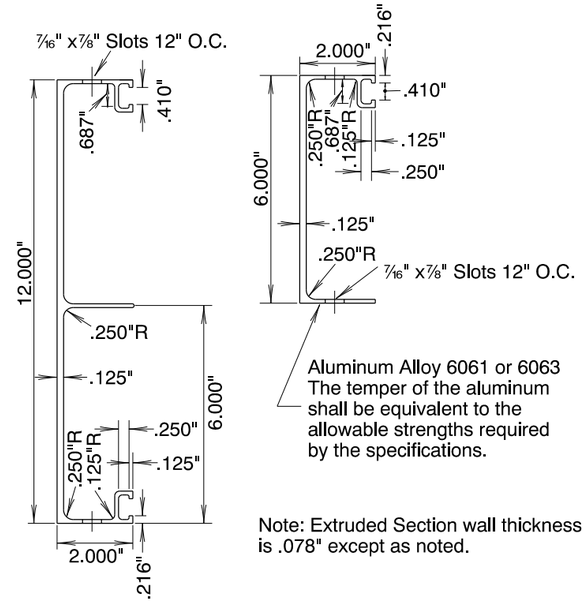

Note: Extruded Section wall thickness is .078" except as noted.

SIGN PANELS & DETAILS

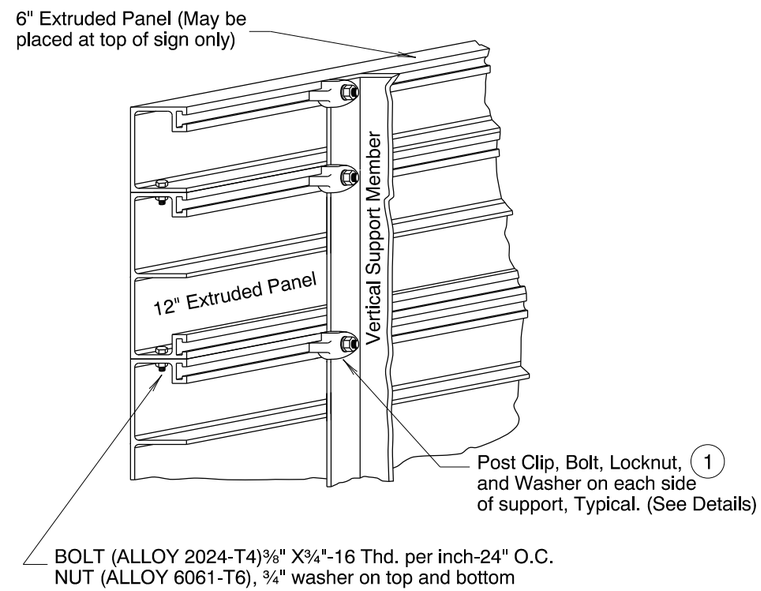

SIGN PANELS ON METAL STRUCTURES
No Scale

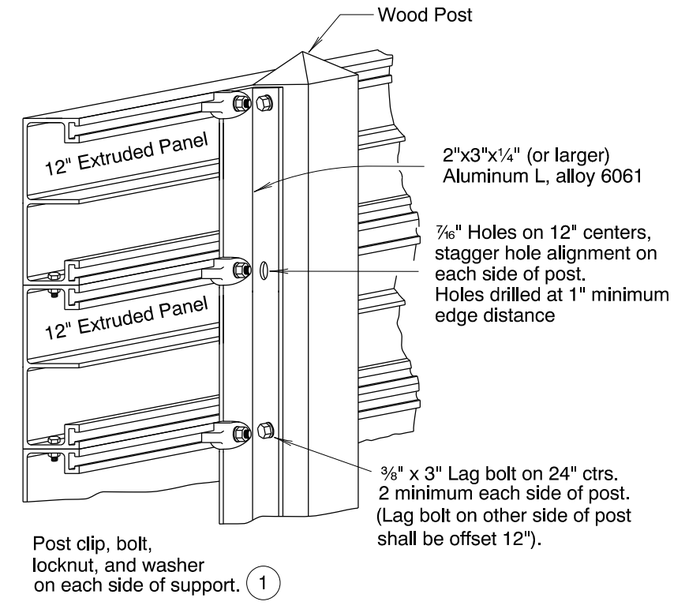

SIGN PANELS ON WOOD POSTS
No Scale

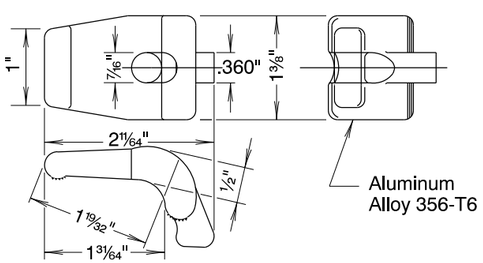

POST CLIP DETAIL

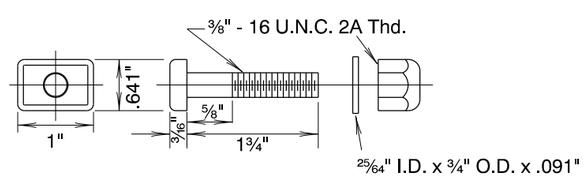

ALUMINUM ALLOYS; BOLT 2024-T4
LOCKNUT 6061-T6 1
WASHER (No alloy specified)

POST CLIP BOLT, NUT, & WASHER DETAIL

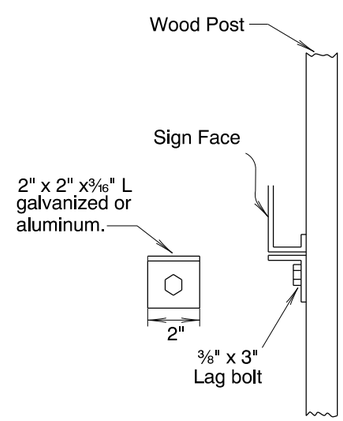

SIGN SUPPORT BRACKET DETAIL
1 Required per post

1 Note:
The locking feature of the
nut shall be a nylon insert.

CALC. BOOK NO.	BASELINE REPORT DATE	ACCOMPANIED BY DWGS.	SHEET
	10-JAN-2014		1 OF 1

NOTE: All material and workmanship shall be in accordance with the current Oregon Standard Specifications

The selection and use of this Standard Drawing, while designed in accordance with generally accepted engineering principles and practices, is the sole responsibility of the user and should not be used without consulting a Registered Professional Engineer.

OREGON STANDARD DRAWINGS

EXTRUDED ALUMINUM PANELS

2015

DATE	REVISION DESCRIPTION

tm675.dgn 11-JUL-2014

TM675

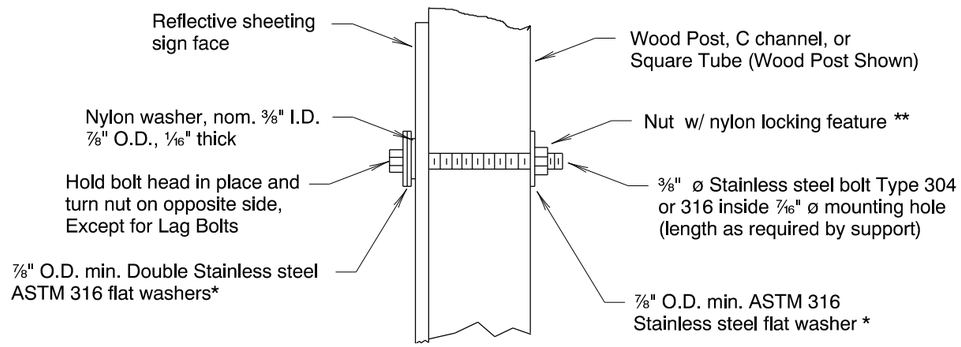

Note:
1)When signs are placed on opposing sides of post, ⅜" x 3" lag bolts can be used instead of through bolt.
2) Use nylon and stainless steel washers when signs are placed on both sides of post.
3) Burr threads at junction with nut when locknuts are not used.
4) Post bolts to extend beyond the tightened nuts within the limits of ¼" to 1".

* Stainless steel bonded sealing washer with neoprene layer is an acceptable substitue

** Acceptable substitute for nylon locking nuts:
ANCO PIN-LOC ®
TRI-LOC ® Top Lock Locknut

SIGN ATTACHMENT DETAIL

CALC. BOOK NO.	BASELINE REPORT DATE	ACCOMPANIED BY DWGS.	SHEET
	06-JUL-2015		1 OF 1

NOTE: All material and workmanship shall be in accordance with the current Oregon Standard Specifications

The selection and use of this Standard Drawing, while designed in accordance with generally accepted engineering principles and practices, is the sole responsibility of the user and should not be used without consulting a Registered Professional Engineer.

OREGON STANDARD DRAWINGS

SIGN ATTACHMENTS

2015

DATE	REVISION DESCRIPTION
07/15	Added baseline report date, bolt was galvanized, and added bonded sealing to washer.

tm676.dgn 06-JUL-2015

TM676

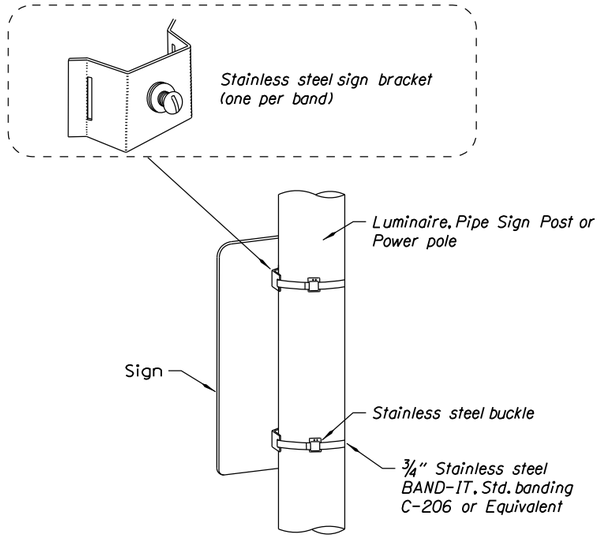

Signs mounted to vertical posts that use stainless steel clamps shall not be wider than 36". Use 2 clamps for all signs less than 48" in height and 3 clamps for signs 48" to 60" in height.

STAINLESS STEEL CLAMP (SSC) DETAIL

No Scale

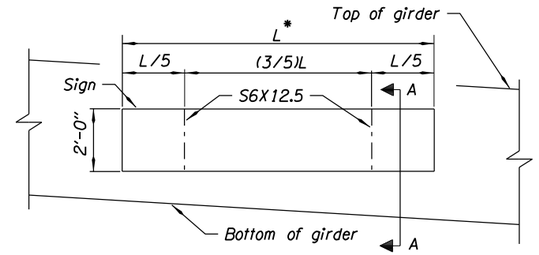

* - L maximum is 14'-0".

SIGN ELEVATION

No Scale

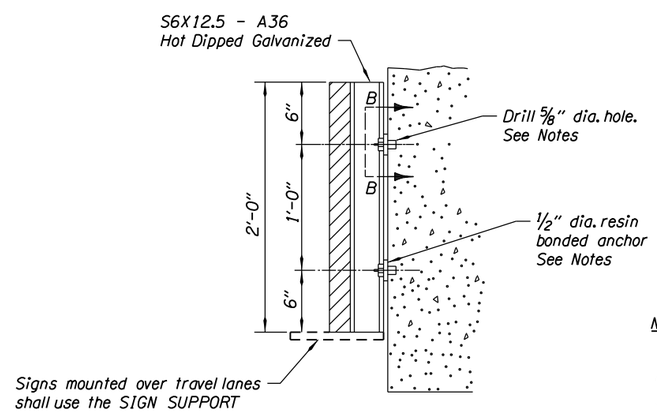

SECTION A-A

No Scale

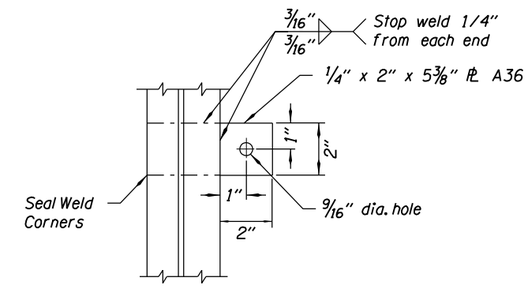

SECTION B-B

No Scale

Notes:

1. Install resin bonded anchors according to Section 00535.
2. Resin bonded anchors shall conform to ASTM A307.
3. The hole depths shall develop the pullout strength specified in Table 00535-1.
4. Tighten 1/2" dia. anchors using 16 ft-lb of torque for waxed galvanized and 40 ft-lb of torque for galvanized only connections.

ROAD NAME SIGN STRUCTURE MOUNT DETAIL

GENERAL NOTES

1. For Secondary Sign Mounts See TM678.

CALC. BOOK NO.	BASELINE REPORT DATE	ACCOMPANIED BY DWGS.	SHEET
	06-JUL-2015		1 OF 1

NOTE: All material and workmanship shall be in accordance with the current Oregon Standard Specifications

The selection and use of this Standard Drawing, while designed in accordance with generally accepted engineering principles and practices, is the sole responsibility of the user and should not be used without consulting a Registered Professional Engineer.

OREGON STANDARD DRAWINGS

SIGN MOUNTS

2015

DATE	REVISION DESCRIPTION
07/15	Added baseline report date, added L maximum, removed ¾" and 3/4" diameter information, added Section 00535 requirements, added stop weld 1/4" from ends, and added seal welds.

tm677.dgn 06-JUL-2015

TM677

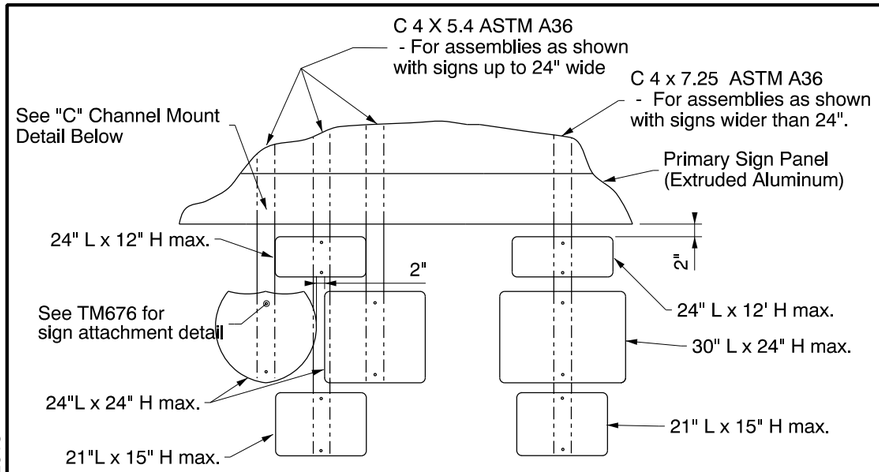

Note: Maintain 2" Horizontal and
2" Vertical Spacing (Typical)

ROUTE MARKERS MOUNTED TO EXTRUDED PANELS
Scale: None

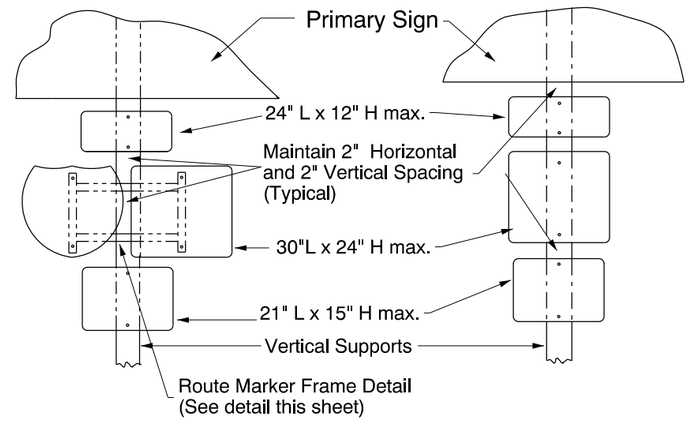

ROUTE MARKERS MOUNTED TO VERTICAL SUPPORTS
Scale: None

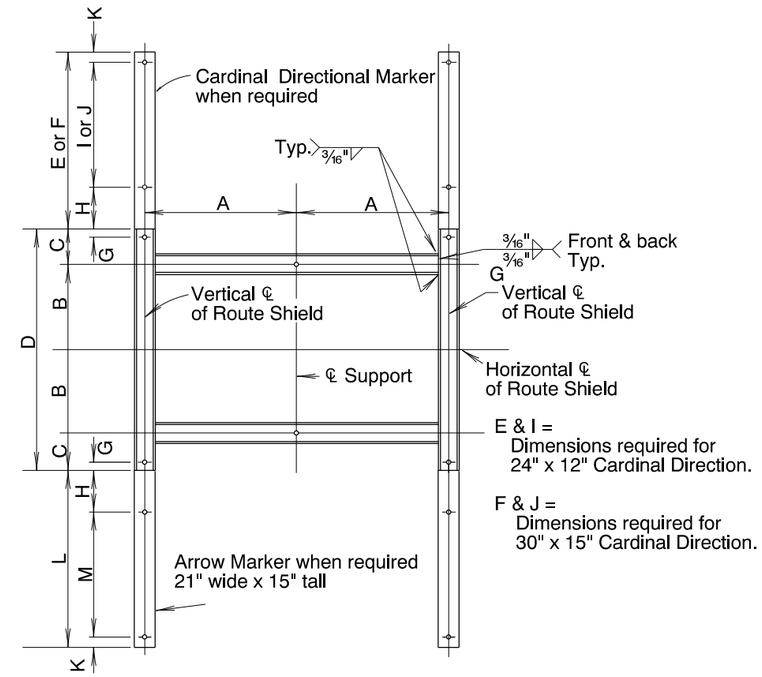

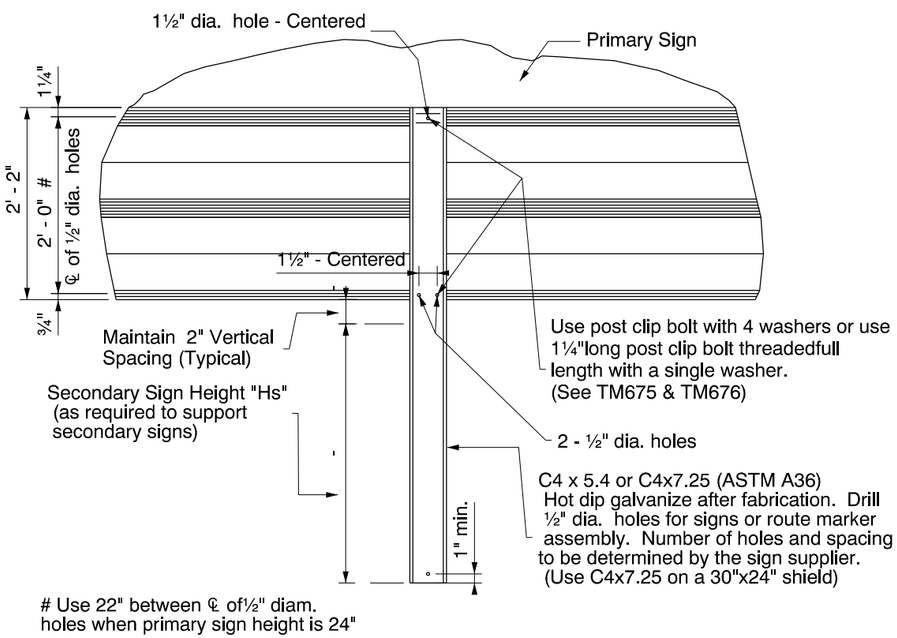

"C" CHANNEL CONNECTION DETAIL
SCALE: None

Shield Sizes (in inches)	A	B	C	D	E	F	G	H	I	J	K	L	M
2 - 24" x 24"	13	8	3½	23	14	17	¾	4	9	12	1	17	12
1 - 24" x 24" & 1-30" x 24"	14½	8	3½	23	14	17	¾	4	9	12	1	17	12
2 - 30" x 24"	16	8	3½	23	14	17	¾	4	9	12	1	17	12
2 - 36" x 36"	19	12	5½	35	14	17	1⅜	4	9	12	1	17	12
1 - 36" x 36" & 1-45" x 36"	21¼	12	5½	35	14	17	1⅜	4	9	12	1	17	12
2 - 45" x 36"	23½	12	5½	35	14	17	1⅜	4	9	12	1	17	12

Note: Route Marker frames shall be constructed from 2" x 2" x 3/16" ASTM A53 GR B tubing, galvanized after fabrication. Provide 7/16" holes, ⅜" galvanized steel bolts, washers, and lock-nuts for mounting route marker frame to post. For sign attachments see TM676.

ROUTE MARKER FRAME DETAIL
Scale: None

CALC. BOOK NO.	BASELINE REPORT DATE	ACCOMPANIED BY DWGS.	SHEET
	09-JAN-2015	TM675, TM676	1 OF 1

NOTE: All material and workmanship shall be in accordance with the current Oregon Standard Specifications

The selection and use of this Standard Drawing, while designed in accordance with generally accepted engineering principles and practices, is the sole responsibility of the user and should not be used without consulting a Registered Professional Engineer.

OREGON STANDARD DRAWINGS

SECONDARY SIGN MOUNTING DETAILS

2015

DATE	REVISION DESCRIPTION
01/15	Changed Wood Posts to Vertical Supports, removed plywood reference, removed attachment note, removed "All hardware.." note, and added accompanied by drawings TM675 and TM676.

09-JAN-2015 tm678.dgn

TM678

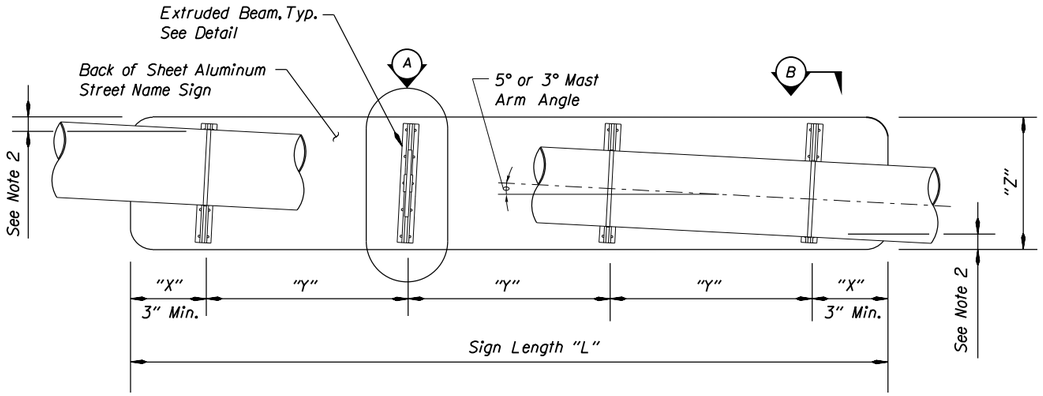

Mast Arm Street Name Mount Requirements				
Sign Length "L"	Maximum Sign Height "Z"	Maximum Edge Distance "X"	Maximum Support Spacing "Y"	Number of Extruded Beam Locations
"L" Less than or Equal to 4'-0"	30"	"L"/4	"L"/2	2
"L" Greater than > 4'-0" and "L" less than or Equal to 8'-0"	30"	1'-0"	3'-0"	3
"L" Greater than > 8'-0" and "L" less than or Equal to 10'-0"	21"	1'-0"	2'-8"	4
"L" Greater than > 10'-0" and "L" less than or Equal to 12'-0"	21"	1'-0"	2'-6"	5

MAST ARM STREET NAME SIGN MOUNT

No Scale

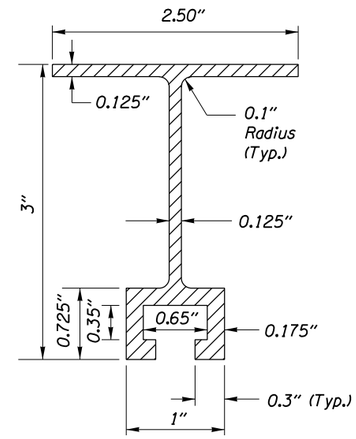

EXTRUDED BEAM DETAIL

No Scale

GENERAL NOTES:

1. Physical fit of the sign must be verified. The edges of the street name sign shall not be within 6" of other signs or the mast arm connection flanges.
2. Equal spaces top and bottom.
3. The top pf the street name sign shall be leveled.
4. Extruded Beams are to be set at an angle perpendicular to the mast arm.
5. Material for extruded beam shall be ASTM B 221 6061-T6 Aluminum.
6. Material for ¾" Band shall be ¾" wide, 0.03" thick, and ASTM A 666, Type 201 Stainless Steel.
7. Material for the Sign Bracket, Universal Channel Clamp, and buckle shall be ASTM A 666, Type 201 Stainless Steel.
8. Existing signal poles must be analyzed to verify that the pole and foundation can support the new street name sign loading. See TM650 for allowable street name sizes on new installations.

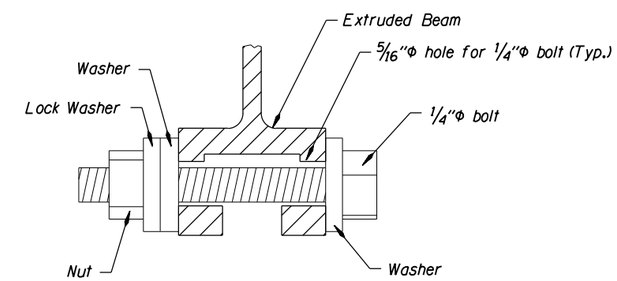

1. All hardware to be Type 316 Stainless Steel.
2. Locate 1" above the top of the Universal Channel Clamp.

STOP BOLT DETAIL

No Scale

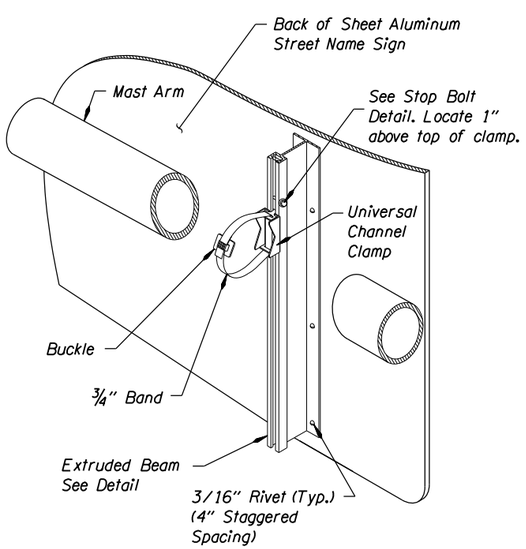

TYPICAL MAST ARM INSTALLATION

No Scale

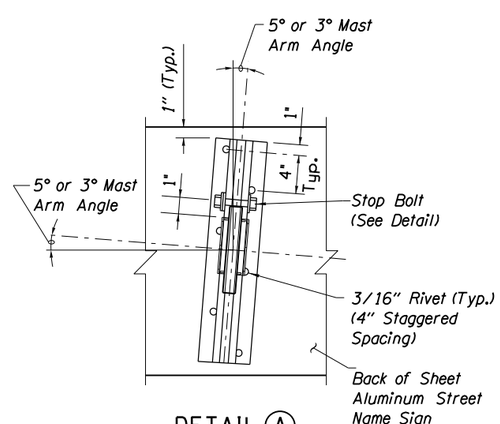

DETAIL (A)

No Scale

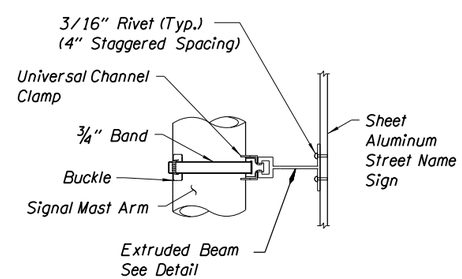

DETAIL VIEW (B)

No Scale

CALC. BOOK NO.	BASELINE REPORT DATE	ACCOMPANIED BY DWGS.	SHEET
	06-JAN-2012		1 OF 1

NOTE: All material and workmanship shall be in accordance with the current Oregon Standard Specifications

The selection and use of this Standard Drawing, while designed in accordance with generally accepted engineering principles and practices, is the sole responsibility of the user and should not be used without consulting a Registered Professional Engineer.

OREGON STANDARD DRAWINGS

SIGNAL MAST ARM STREET NAME SIGN MOUNTS

2015

DATE	REVISION DESCRIPTION

tm679.dgn 11-JUL-2014

TM679

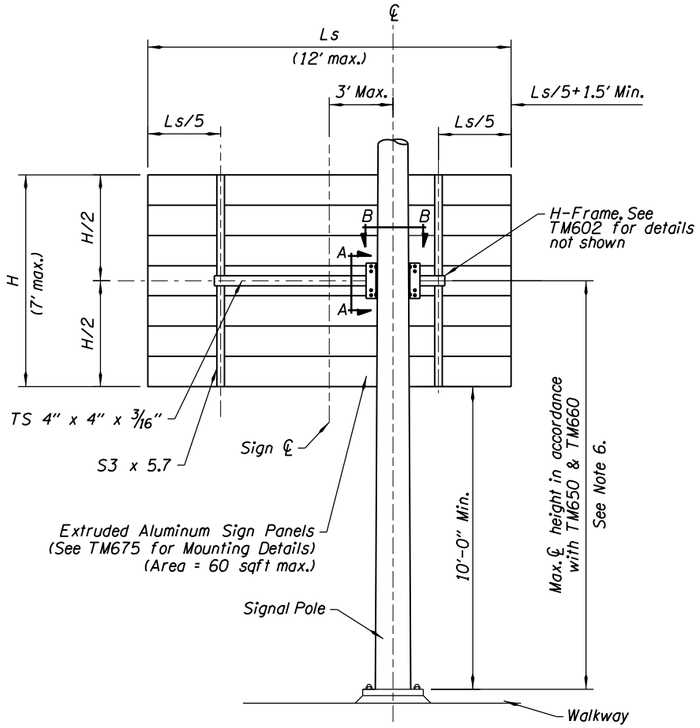

SIGNAL POLE MOUNT ELEVATION

No Scale

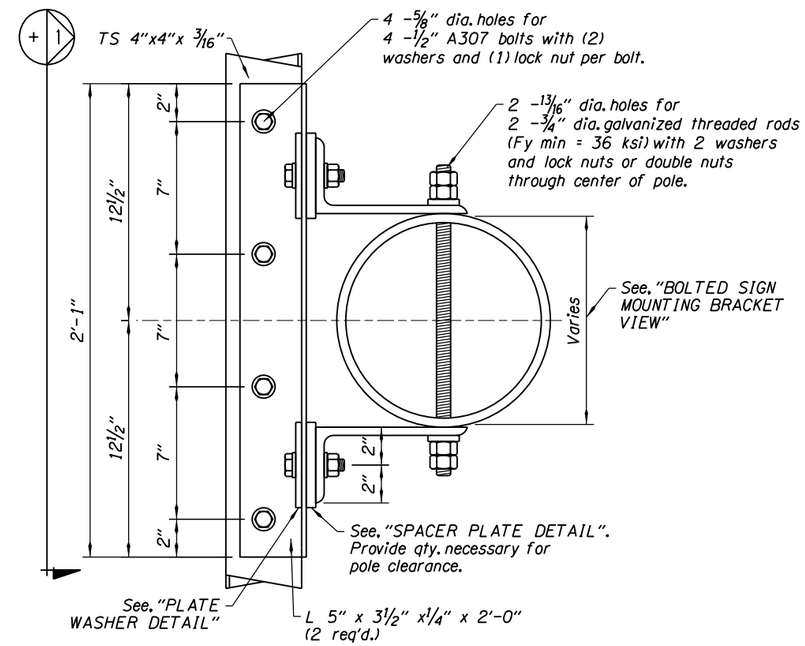

SECTION B-B

No Scale

GENERAL NOTES:

1. High strength bolts shall conform to ASTM specification A325. All other bolts shall conform to ASTM specification A307.
2. Structural steel shall conform to ASTM A36.
3. All steel and bolts shall be hot-dip galvanized after fabrication.
4. Surfaces of holes drilled in poles shall be galvanized according to ASTM A780.
5. Maximum sign size is 60 sq. ft. for this signal pole mount.
6. Any signal pole intended to support one of these mounts must first be analyzed to determine if the load-bearing capacity is sufficient to support this extra load.
7. Structural tubing shall conform to ASTM specification A500, Grade "B" or A501.
8. Cantilever sign to meet lateral clearance requirements and must be kept entirely within the Right-of-Way.
9. Field check pole diameters at mounting heights and cut upper and lower attachment plates to fit.

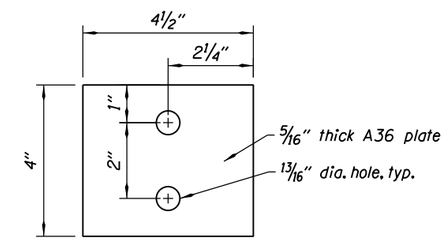

PLATE WASHER DETAIL

No Scale

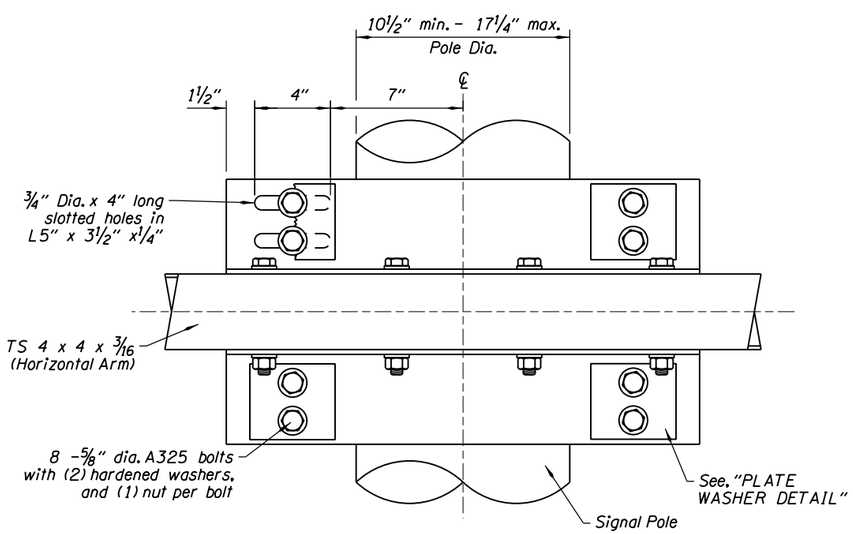

1 + BOLTED SIGN MOUNTING BRACKET VIEW

No Scale

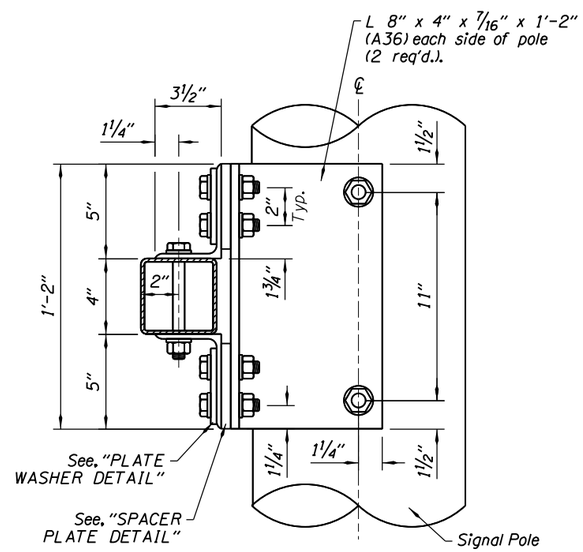

SECTION A-A

No Scale

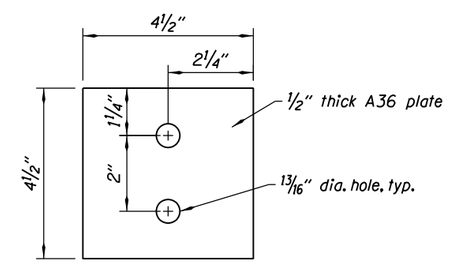

SPACER PLATE DETAIL

No Scale

CALC. BOOK NO.	BASELINE REPORT DATE	ACCOMPANIED BY DWGS.	SHEET
	07-JAN-2013		1 OF 1

NOTE: All material and workmanship shall be in accordance with the current Oregon Standard Specifications

The selection and use of this Standard Drawing, while designed in accordance with generally accepted engineering principles and practices, is the sole responsibility of the user and should not be used without consulting a Registered Professional Engineer.

OREGON STANDARD DRAWINGS

SIGNAL POLE MOUNTS

2015

DATE	REVISION DESCRIPTION

tm680.dgn 11-JUL-2014

TM680

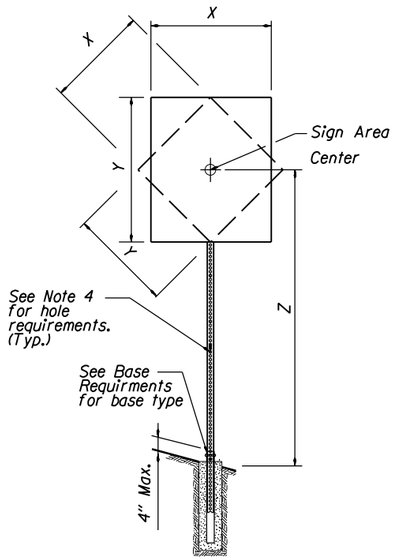

SINGLE POST ELEVATION

No scale

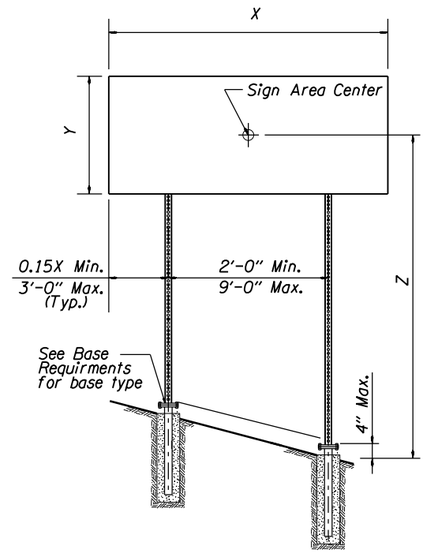

TWO POST ELEVATION

No scale

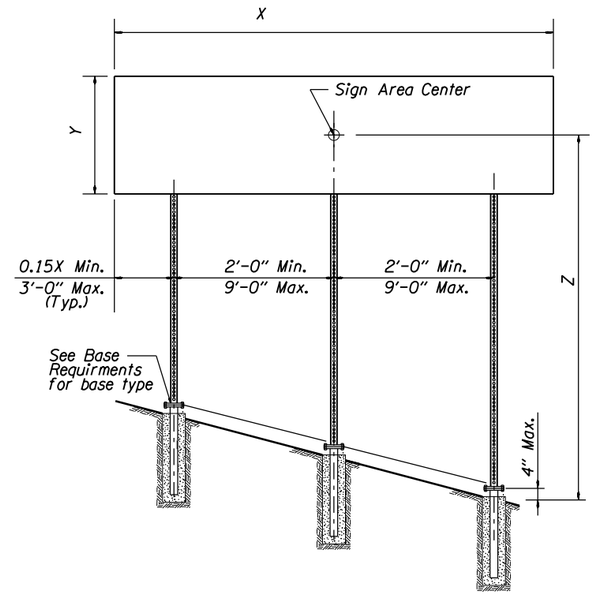

THREE POST ELEVATION

No scale

GENERAL NOTES:

1. Perforated Steel Square Supports are designed in accordance with the AASHTO Standard Specifications for Structural Supports for Highway Signs, Luminaires, and Traffic Signals 4th Edition, 2001, 2002, 2003, and 2006 interim revisions.
2. The design basic wind speed (3 second gust) shall be according to the wind map shown on TM671.
3. Material grade for base hardware connection shall be according to the manufacturer's recommendation and based on crash testing.
4. Use 7/16" diameter holes at 1" spacing on each of the 4 sides.
5. Steel post shall have a minimum yield stress of 50 ksi.
6. Steel shall be galvanized according to ASTM A653 with coating designation G140.
7. General design parameters are Kz = 0.87, Cd (sign) = 1.20, and G = 1.14.
8. Permanent signing uses an Ir = 0.71 for a recurrence interval of 10 years.
9. Temporary signing uses an Ir = 0.45 for a recurrence interval of 1.5 years.
10. The sign width to sign height or sign height to sign width ratio shall not exceed 5.0.
11. For horizontal and vertical clearances of permanent signs refer to TM200 and of temporary signs refer to TM821.
12. Posts protected by barrier or guardrail do not require slip bases.

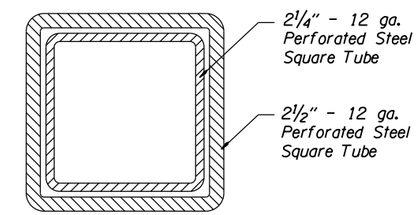

2¼" - 12 ga. PSST to extend entire length inside of the 2½" - 12 ga. PSST.

2¼" & 2½" - 12 GA. DETAIL

No scale

	(X * Y * Z) in ft³								
	3 Second Gust Wind Speed (TM671)								
	85 MPH			95 MPH			105 or 110 MPH		
	Number of Posts			Number of Posts			Number of Posts		
Square Tube Size	1	2	3	1	2	3	1	2	3
2"-12 ga.	79	158	237	63	126	189	57	114	171
2½"-12 ga.	136	272	408	109	218	327	98	196	294
2½"-10 ga.	165	330	495	132	264	396	119	238	357
2¼" & 2½"-12 ga.*	231	462	693	185	370	555	167	334	501

PERMANENT PERFORATED STEEL SQUARE TUBE TABLE

	(X * Y * Z) in ft³								
	3 Second Gust Wind Speed (TM671)								
	85 MPH			95 MPH			105 or 110 MPH		
	Number of Posts			Number of Posts			Number of Posts		
Square Tube Size	1	2	3	1	2	3	1	2	3
2"-12 ga.	125	250	375	100	200	300	90	180	270
2½"-12 ga.	215	430	645	172	344	516	155	310	465
2½"-10 ga.	261	522	783	209	418	627	189	378	567
2¼" & 2½"-12 ga.*	364	728	1092	292	584	876	263	526	789

TEMPORARY PERFORATED STEEL SQUARE TUBE TABLE

	Number of Posts		
Square Tube Size	1	2	3
2"-12 ga.	Anchor	Anchor	N/A
2½"-12 ga.	Anchor	Slip	Slip
2½"-10 ga.	Slip	Slip	Slip
2¼" & 2½"-12 ga.*	Slip	Slip	Slip

1. Anchor - See Drawing TM687 for PSST anchor foundation details.
2. Slip - See Drawing TM688 for PSST slip base foundation details.
3. N/A - Do not use this option.

BASE REQUIREMENTS

* - See 2¼" & 2½" - 12 ga. detail.

CALC. BOOK NO.	BASELINE REPORT DATE	ACCOMPANIED BY DWGS.	SHEET
5752	06-JAN-2012	TM200, TM671, TM687, TM688, TM775	1 OF 3

NOTE: All material and workmanship shall be in accordance with the current Oregon Standard Specifications

The selection and use of this Standard Drawing, while designed in accordance with generally accepted engineering principles and practices, is the sole responsibility of the user and should not be used without consulting a Registered Professional Engineer.

OREGON STANDARD DRAWINGS

PERFORATED STEEL SQUARE TUBE (PSST) SIGN SUPPORT INSTALLATION

2015

DATE	REVISION DESCRIPTION

tm681.dgn 11-JUL-2014

TM681

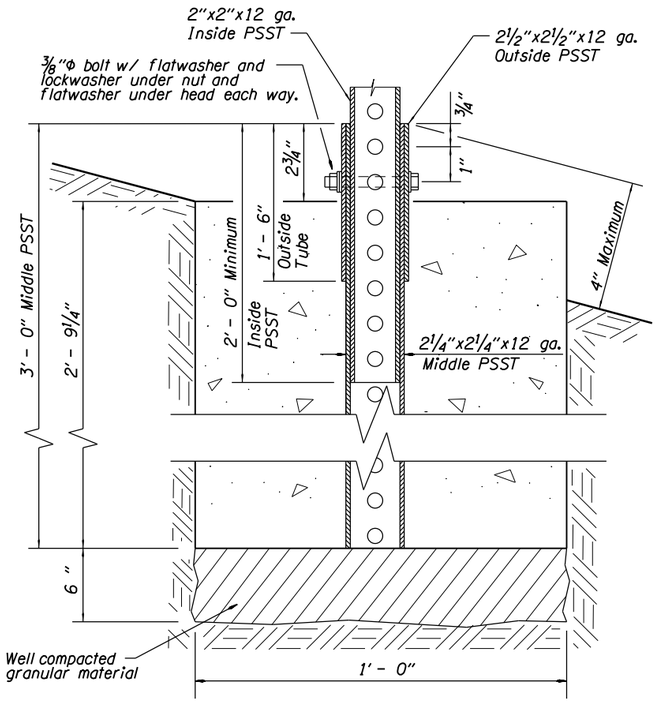

2" ANCHOR DETAIL

No scale

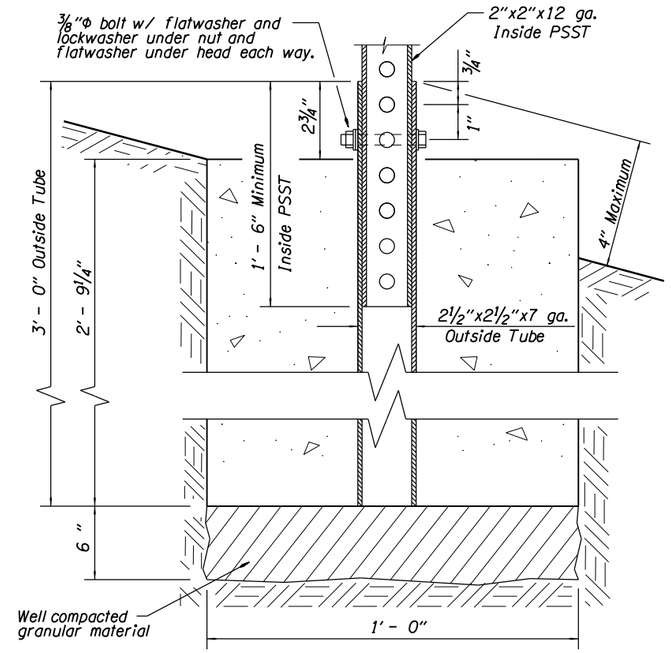

2" OPTIONAL ANCHOR DETAIL

No scale

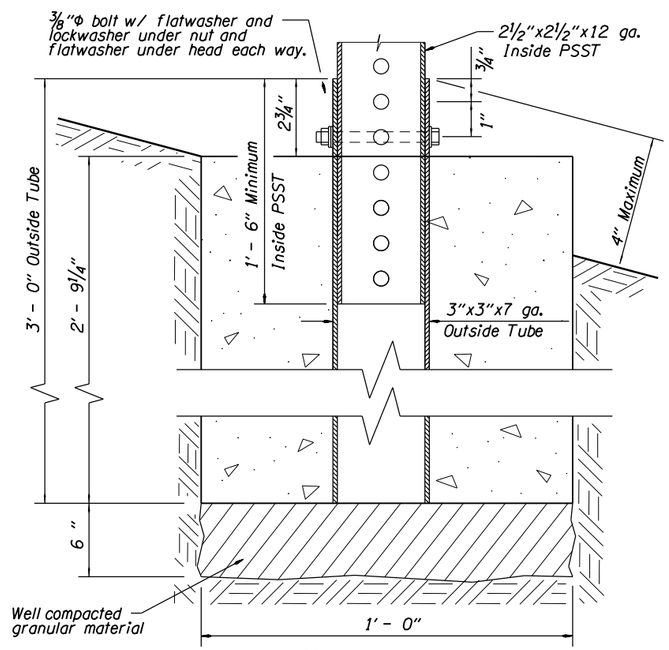

2½" ANCHOR DETAIL

No scale

General Notes:

1. Material grade for base hardware connection shall be according to the manufacturer's recommendation and based on crash testing.
2. Anchor steel shall be hot dipped galvanized or approved equal.
3. Footing concrete shall be Commercial Grade Concrete (fc = 3000 psi) per Specification 00440. The CGC mixture may be accepted at the site of placement according to 00440.14.
4. The estimated concrete volume is .09 cubic yards.

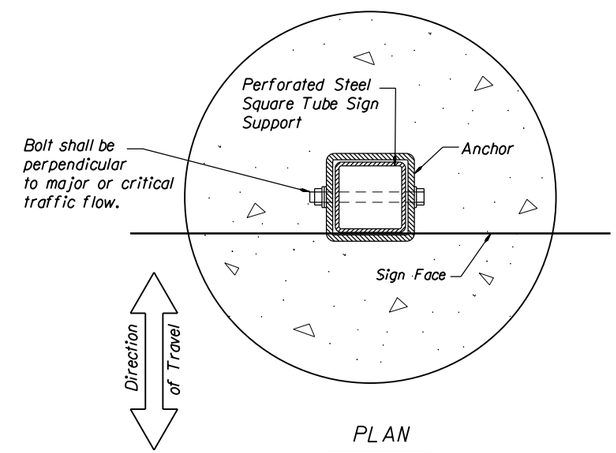

PLAN

No scale

CALC. BOOK NO.	BASELINE REPORT DATE	ACCOMPANIED BY DWGS.	SHEET
5752	06-JAN-2012	TM681, TM688	2 OF 3

NOTE: All material and workmanship shall be in accordance with the current Oregon Standard Specifications

The selection and use of this Standard Drawing, while designed in accordance with generally accepted engineering principles and practices, is the sole responsibility of the user and should not be used without consulting a Registered Professional Engineer.

OREGON STANDARD DRAWINGS

PERFORATED STEEL SQUARE TUBE (PSST) ANCHOR FOUNDATION

2015

DATE	REVISION DESCRIPTION

tm687.dgn 11-JUL-2014

TM687

tm688.dgn 11-JUL-2014

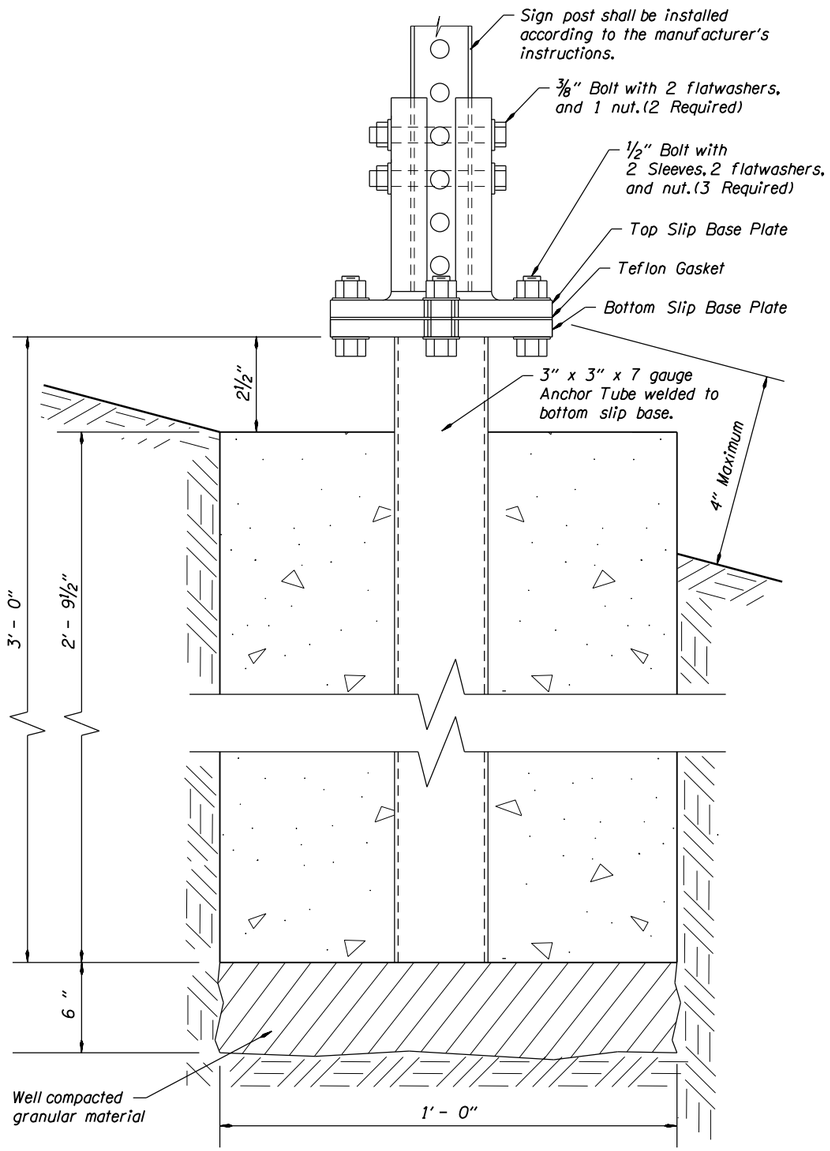

SLIP BASE ELEVATION

No scale

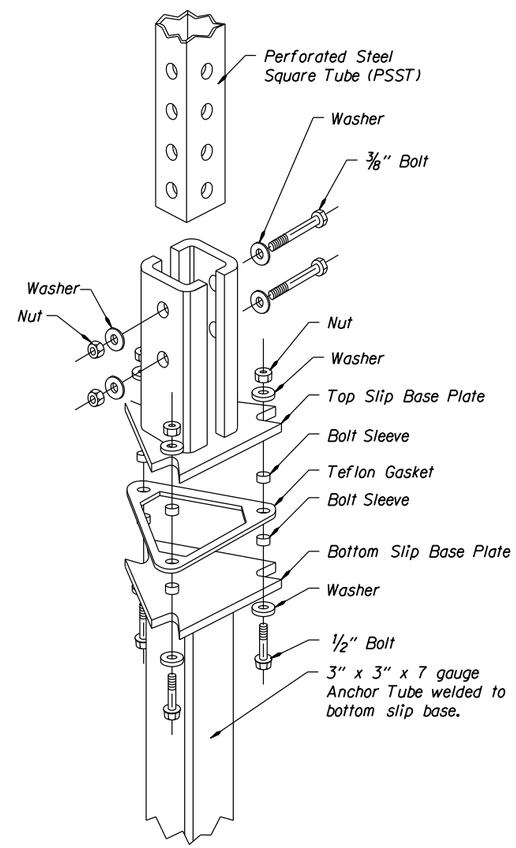

SLIP BASE EXPLODED VIEW

No scale

General Notes:

1. Material grade for base hardware connection shall be according to the manufacturer's recommendation and based on crash testing.
2. Slip base steel shall be hot dipped galvanized or approved equal.
3. Footing concrete shall be Commercial Grade Concrete (fc = 3000 psi) per Specification 00440. The CGC mixture may be accepted at the site of placement according to 00440.14.
4. Material grade for base hardware connection shall be according to the manufacturer's recommendation and based on crash testing.
5. All slip bases shall be pre-assembled by the manufacturer and shall be installed according to the manufacturer's instructions.
6. Use slip bases listed on the ODOT Qualified products list or submit crash testing data, installation instructions, and unstamped working drawings according to 00150.35.
7. Slip base details shown are not for a specific manufacturer and are only shown to convey general pieces of a slip base system. Specific slip base material will be acccording to the manufacturer's documentation.

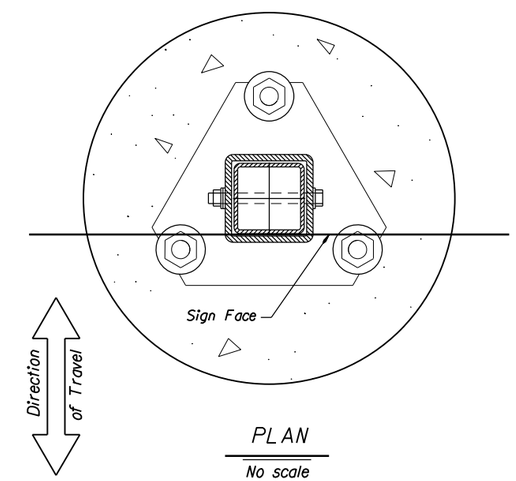

PLAN

No scale

CALC. BOOK NO.	BASELINE REPORT DATE	ACCOMPANIED BY DWGS.	SHEET
5752	06-JAN-2012	TM681, TM687	3 OF 3

NOTE: All material and workmanship shall be in accordance with the current Oregon Standard Specifications

The selection and use of this Standard Drawing, while designed in accordance with generally accepted engineering principles and practices, is the sole responsibility of the user and should not be used without consulting a Registered Professional Engineer.

OREGON STANDARD DRAWINGS

PERFORATED STEEL SQUARE TUBE (PSST) SLIP BASE FOUNDATiON

2015

DATE	REVISION DESCRIPTION

TM688

TAPER TYPES & FORMULAS	
TAPER	FORMULA
Merging (Lane Closure)	"L"
Shifting	"L"/2 or ½"L"
Shoulder Closure	"L"/3 or ⅓"L"
Flagging (See Drg. TM850)	50' - 100'
Downstream (Termination)	Varies (See Drawings)

★ Use Pre-Construction Posted Speed to select the Speed from the Tables below:

CONCRETE BARRIER FLARE RATE TABLE	
★ SPEED (mph)	MINIMUM FLARE RATE
≤ 30	8:1
35	9:1
40	10:1
45	12:1
50	14:1
55	16:1
60	18:1
65	19:1

MINIMUM LENGTHS TABLE					
"L" VALUE FOR TAPERS (ft)					BUFFER "B" (ft)
★ SPEED (mph)	W = Lane or Shoulder Width being closed or shifted				
	W ≤ 10	W = 12	W = 14	W = 16	
25	105	125	145	165	75
30	150	180	210	240	100
35	205	245	285	325	125
40	265	320	375	430	150
45	450	540	630	720	180
50	500	600	700	800	210
55	550	660	770	880	250
FREEWAYS					
55	1000	1000	1000	1000	250
60	1000	1000	1000	1000	285
65	1000	1000	1000	1000	325

NOTES:
- For Lane closures where W < 10', use "L" value for W = 10'.
- For Shoulder closures where W < 10', use "L" value for W = 10' or calculate "L" using formula, for Speeds ≥ 45: L = WS, Speeds < 45: L = S²W/60, S = Speed, W=Width

TRAFFIC CONTROL DEVICES (TCD) SPACING TABLE				
★ SPEED (mph)	Sign Spacing (ft)			Max. Channelizing Device Spacing (ft)
	A	B	C	
20 - 30	100	100	100	20
35 - 40	350	350	350	20
45 - 55	500	500	500	40
Freeway	1000	1500	2640	40

NOTES:
- Place traffic control devices on 10 ft. spacing for intersection and access radii.
- When necessary, sign spacing may be adjusted to fit site conditions. Limit spacing adjustments to 20% of the "A" dimension for speeds < 45 mph. Limit spacing adjustments to 10% of the "A" dimension for speeds ≥ 45 mph.

NOTES:
- When paved shoulders adjacent to excavations are less than four feet wide protect longitudinal abrupt edge as shown.
- Use aggregate wedge when abrupt edge is 2 inches or greater.

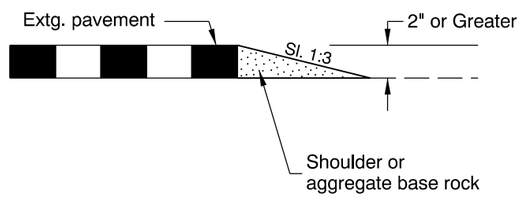

EXCAVATION ABRUPT EDGE

NOTES:
- Install PCMS beyond the outside shoulder, when possible.
- Use the appropriate type of barricade panels for PCMS location. Right shoulder, use Type B(III)R Left shoulder, use Type B(III)L
- Use six drums in shoulder taper on 20' spacing.
- Detail as shown is also used for Portable Traffic Signal installation and Portable Traffic Management System.

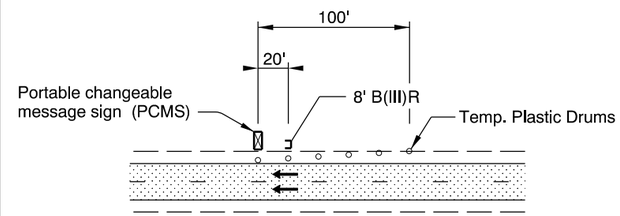

PORTABLE CHANGEABLE MESSAGE SIGN (PCMS) INSTALLATION

NOTES:
- Install Flagger Station Lighting beyond the outside shoulder, where practical.
- Use six tubular markers in shoulder taper on 10' spacing.
- Place cart / generator / power supply off of the shoulder, as far as practical.

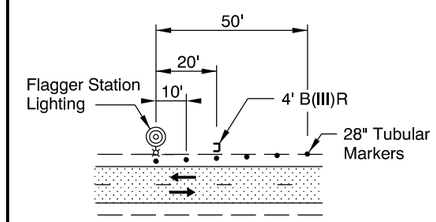

FLAGGER STATION LIGHTING DELINEATION

NOTES:
- Abrupt edges may be created by paving, operations, excavations or other roadway work. Use abrupt edge signing for longitudinal abrupt edges of 1 inch or greater.
- If the excavation is located on left side of traffic, replace the 8' B(III)R barricades with 8' B(III)L barricades and replace the "RIGHT" (CW21-8C) riders with "LEFT" (CW21-8A) riders.
- Continue signing and other traffic control devices throughout excavation area at spacings shown.
- If roll-up signs are used, attach the correct (CW21-9) plaques to the sign face using hook and loop fasteners. Place roll-up signs in advance of barricades.

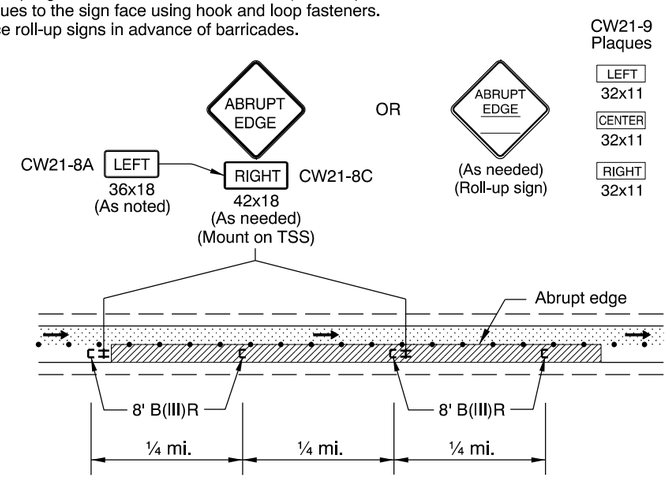

TYPICAL ABRUPT EDGE DELINEATION

GENERAL NOTES FOR ALL TCP DRAWINGS:
- Signs and other Traffic Control Devices (TCD) shown are the minimum required.
- Place a barricade approx. 10' ahead of all Temporary Sign Supports (TSS).
- Place a barricade approx. 20' ahead of all sequential arrow boards.
- Arrows shown in roadway are directional arrows to indicate traffic movements.
- All signs are 48" x 48", type "O4" flourescent orange, unless otherwise shown.
- Low speed highways have a pre-construction posted speed of 40 mph or less. High speed highways have a pre-construction posted speed of > 40 mph.
- Do not locate sign supports in locations designated for bicycle or pedestrian traffic.

○ ○ ○ Temp. Plastic Drums See TCD Spacing Table for max. spacing.

• • • 28" Tubular Markers See TCD Spacing Table for max. spacing.

UNDER TRAFFIC

UNDER CONSTRUCTION

To be accompanied by Drg. Nos. TM820 & TM821

CALC. BOOK NO. TM09-01

BASELINE REPORT DATE 01-JUL-2015

NOTE: All material and workmanship shall be in accordance with the current Oregon Standard Specifications

The selection and use of this Standard Drawing, while designed in accordance with generally accepted engineering principles and practices, is the sole responsibility of the user and should not be used without consulting a Registered Professional Engineer.

OREGON STANDARD DRAWINGS

TABLES, ABRUPT EDGE AND PCMS DETAILS

2015

DATE	REVISION DESCRIPTION
01-01-2015	REVISED DRAWING AND NOTES
07-01-2015	REVISED DRAWING AND NOTES

tm800.dgn 01-JUL-2015

TM800

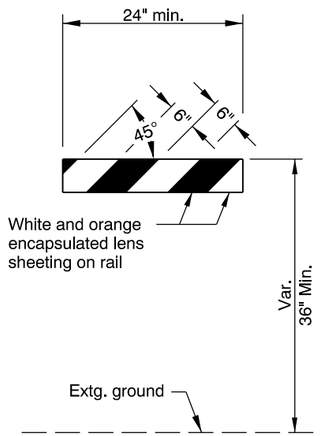

TYPE I

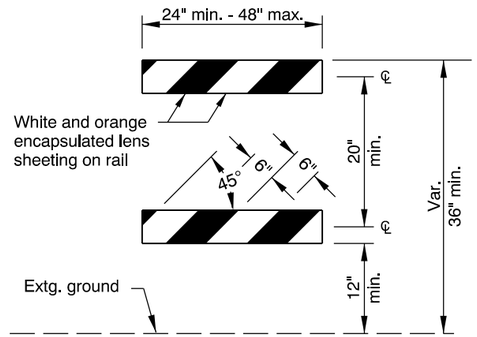

TYPE II

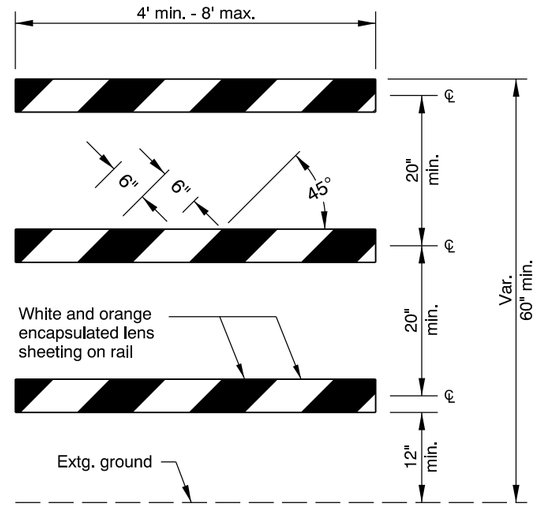

TYPE III

BARRICADE RAIL LAYOUT

GENERAL NOTES FOR ALL DETAILS:

- All non-reflectorized surfaces shall be white.
- Sandbags (approximately 25 lb sack filled with sand) may be placed on lower frame to provide additional ballast.
- Ballast shall not extend above bottom rail or be suspended from barricade.
- For rails less than 36" long, 4" wide stripes shall be used.
- Rails must be 8" min. to 12" max. in height.
- Use barricades from ODOT Qualified Products List (QPL).
- Use 4' Type III barricades where horizontal space is limited.
- Do not block bike lanes or shoulders unless the facility is properly closed and signed.
- Do not place barricades in sidewalks unless sidewalk is closed and signed according to the TCP. See Dwg. No. TM 844

NOTES:

- Markings for barricade rails shall slope downward at an angle of 45° in the direction traffic is to pass.
- Where a barricade extends entirely across a roadway, it is desirable that the stripes slope downward in the direction toward which traffic must turn in detouring.
- Where both right and left turns are provided for, slope the chevron striping downward in both directions from the center of the barricade.
- For full roadway closures, the C or LR barricade may be used. Extend barricades completely across roadway unless access is required for local road users.

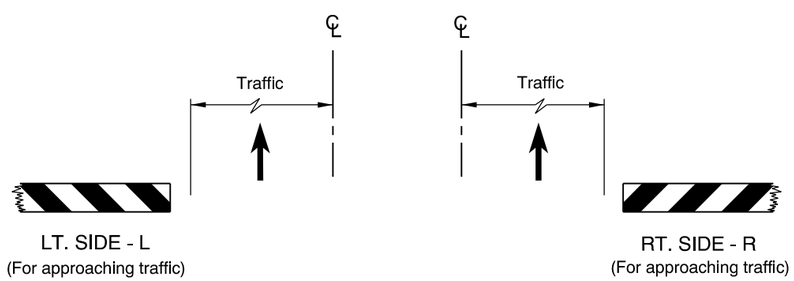

LT. SIDE - L
(For approaching traffic)

RT. SIDE - R
(For approaching traffic)

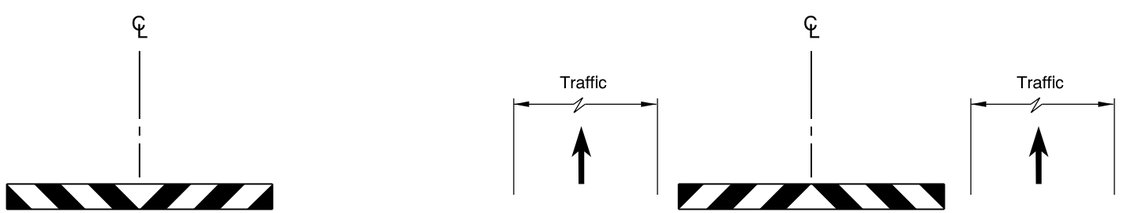

CLOSED - C
(For approaching traffic)

LT. / RT. - LR
(For approaching traffic)

DIAGRAM FOR BARRICADE PLACEMENT AND SLOPE MARKING

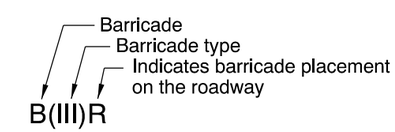

BARRICADE NOTATION

CALC. BOOK NO. N/A

BASELINE REPORT DATE 01-JAN-2015

NOTE: All material and workmanship shall be in accordance with the current Oregon Standard Specifications

The selection and use of this Standard Drawing, while designed in accordance with generally accepted engineering principles and practices, is the sole responsibility of the user and should not be used without consulting a Registered Professional Engineer.

OREGON STANDARD DRAWINGS

TEMPORARY BARRICADES

2015

DATE	REVISION DESCRIPTION
01-01-2015	REVISED DRAWING AND NOTES

tm820.dgn 01-JAN-2015

TM820

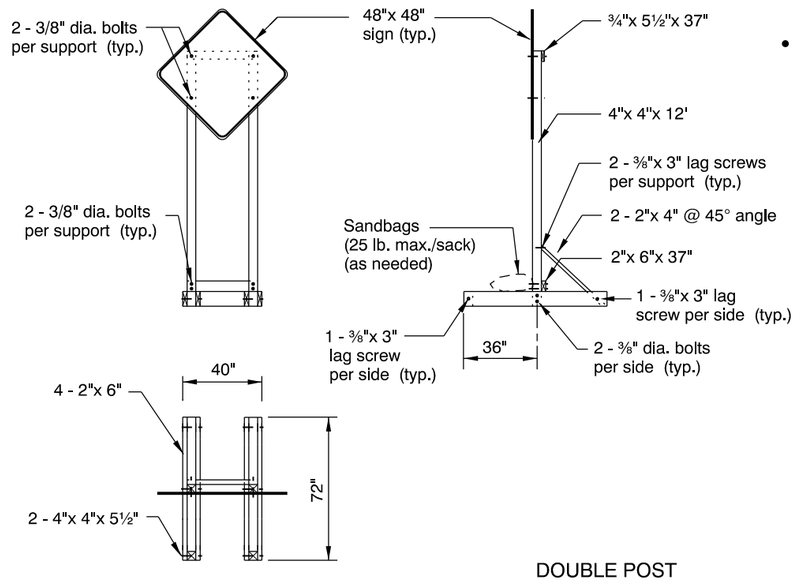

NOTES:

- Use Double Post TSS for a total sign area of 40 sq. ft. or less.
- Position double post TSS 10' behind an 8' (4' - where space is limited) Type (III) barricade, unless otherwise shown, or if TSS is located behind curb, barrier, guardrail, or other rigid system.

DOUBLE POST
TEMPORARY SIGN SUPPORT (TSS)

- DO NOT TIP OVER TSS AT ANY TIME.
- When not in use, locate TSS a minimum of 30' from the roadway and turn away from traffic; or, turn or cover sign and retain the Type (III) barricade for delineation.
- Use either Douglas Fir or Hem Fir, which is surfaced four sides (S4S) and free of heart center (FOHC).
- See "Temporary Sign Placement" detail for sign installation heights.
- Do not place or stack ballast more than 24" above the ground.

NOTES:

- Use Single Post TSS for a total sign area of 9 sq. ft. or less.
- Position single post TSS 10' behind a 4' Type (III) barricade unless TSS is located behind temporary channelization devices (e.g., drums), curb, barrier, guardrail, or other rigid system.

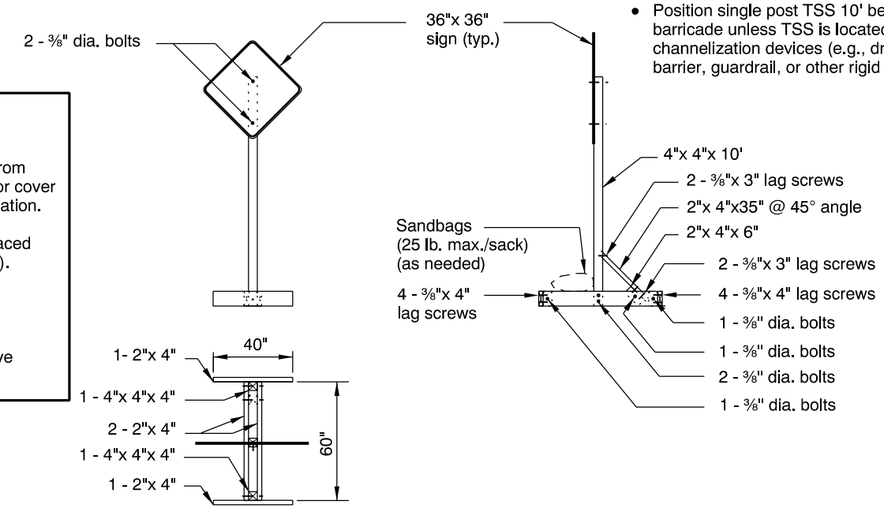

SINGLE POST
TEMPORARY SIGN SUPPORT (TSS)

NOTE:

- Avoid locating sign supports in areas designated for bicycle or pedestrian traffic. When TSS or post mounted signs are located adjacent to or on a sidewalk or bicycle facility, install secondary sign (rider) at a minimum height of 7'-0" from top of sidewalk or bicycle facility to bottom of rider.

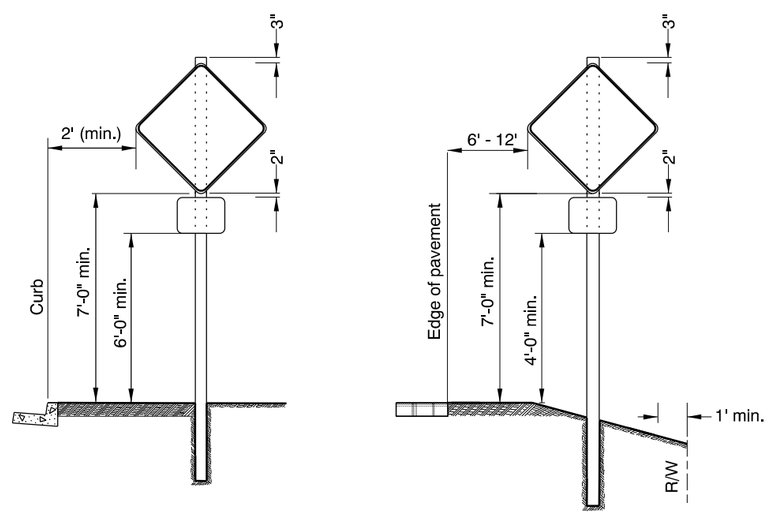

URBAN AREAS WITH CURB

URBAN AREAS - NO CURB
RURAL AREAS - CURB OR NO CURB

TEMPORARY SIGN PLACEMENT

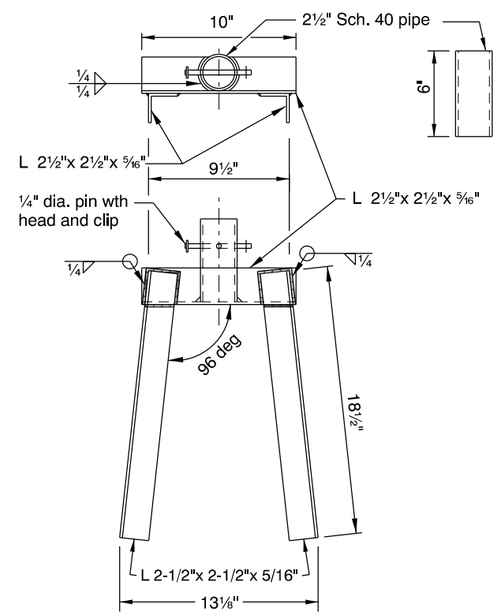

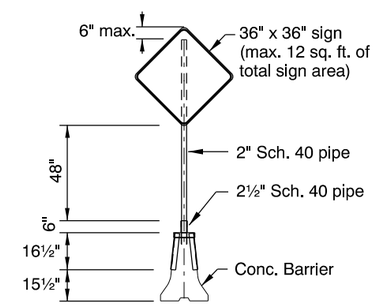

NOTES:

- Drill additional holes so sign can be rotated 90 degrees and pinned when not in use.
- All structural steel shall conform to ASTM A36.
- Support fits both 32" and 42" tall "F" barrier.
- Use for supporting a maximum 12 sq. ft. of total sign area.
- Place support at connection between two concrete barrier sections.
- Weld steel according to American Welding Society (AWS) D.1.1.
- Do not use clipped signs.

CONCRETE BARRIER SIGN SUPPORT

CALC. BOOK NO. N/A	BASELINE REPORT DATE 01-JUL-2015
The selection and use of this Standard Drawing, while designed in accordance with generally accepted engineering principles and practices, is the sole responsibility of the user and should not be used without consulting a Registered Professional Engineer.	NOTE: All material and workmanship shall be in accordance with the current Oregon Standard Specifications
	OREGON STANDARD DRAWINGS TEMPORARY SIGN SUPPORTS 2015

DATE	REVISION DESCRIPTION
07-01-2015	REVISED NOTES

tm821.dgn 01-JUL-2015

TM821

NOTE:
If closure is less than 1500 ft. from intersection, install "ROAD CLOSED TO THRU TRAFFIC" sign, as shown on the "TYPICAL ROAD CLOSURE" detail.

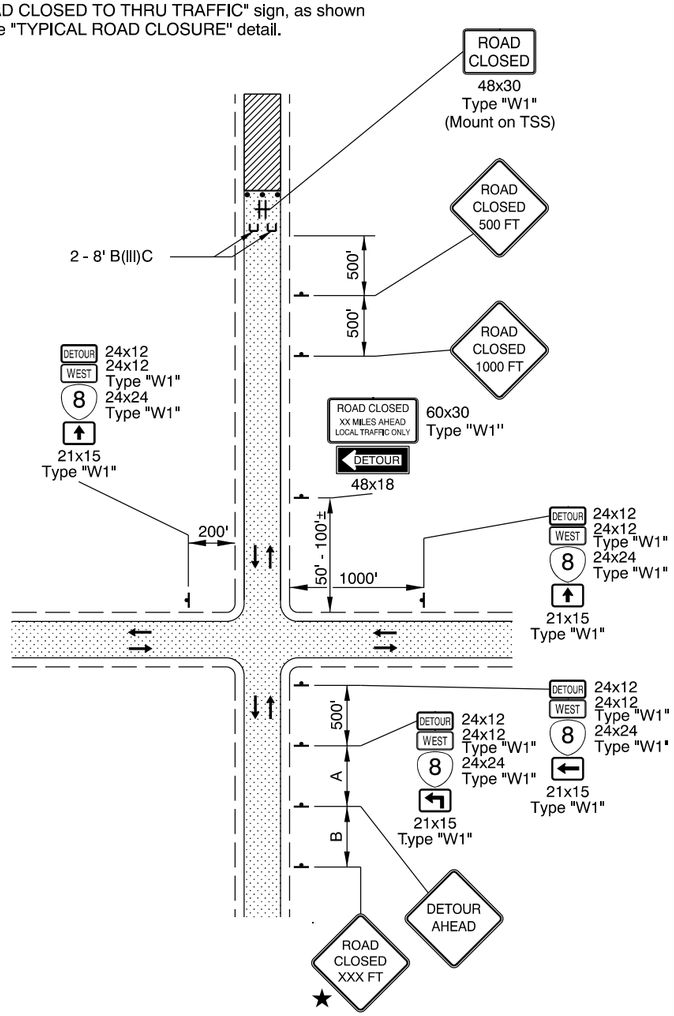

TYPICAL ROAD CLOSURE WITH DETOUR

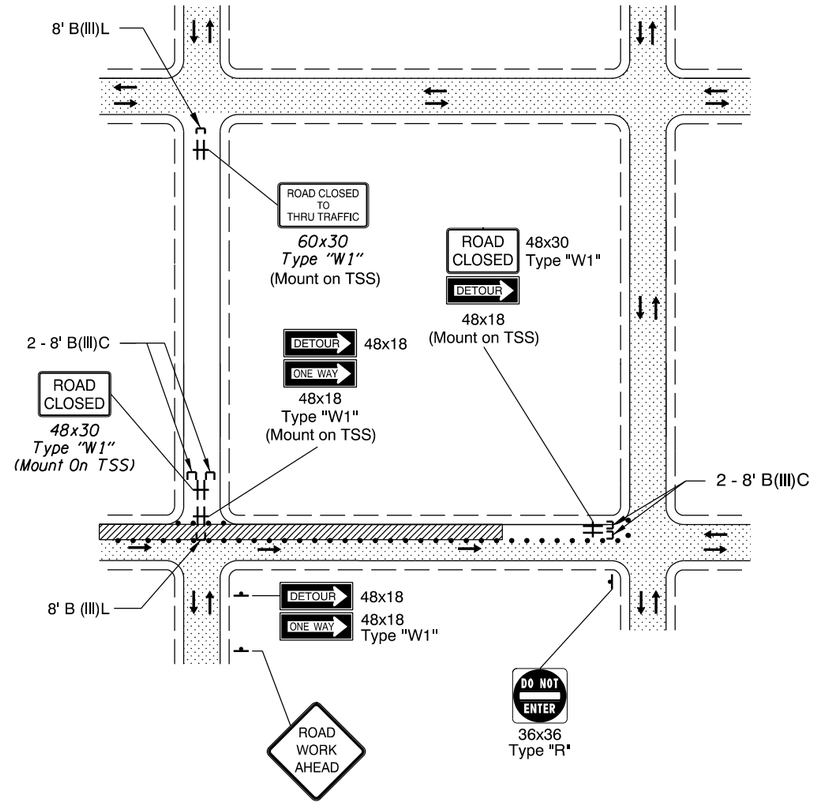

TYPICAL PARTIAL ROAD CLOSURE

NOTE:
If accesses exist between intersection and point of closure, install "ROAD CLOSED TO THRU TRAFFIC" sign as shown.

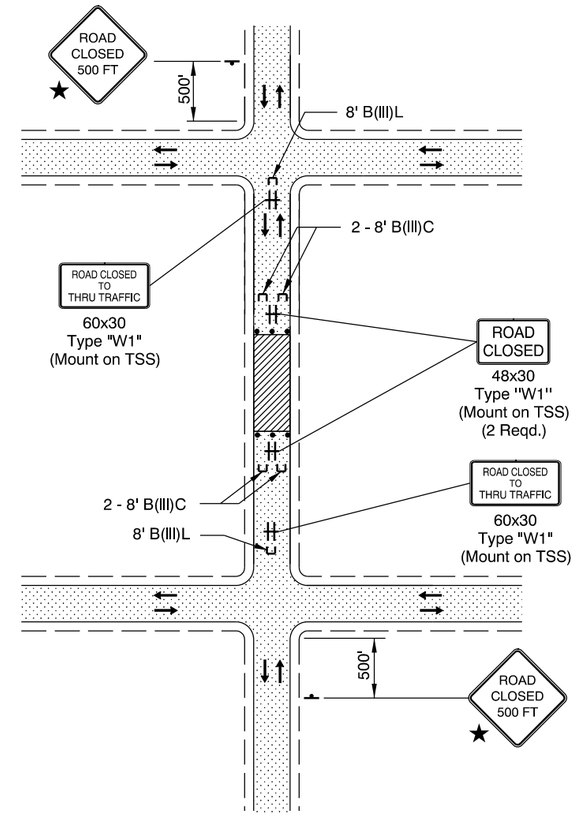

TYPICAL ROAD CLOSURE

GENERAL NOTES FOR ALL DETAILS:

★ A "Street Name" rider may be used to enhance Road Closure signing; or provide a project specific design; or, as shown in the traffic control plan.

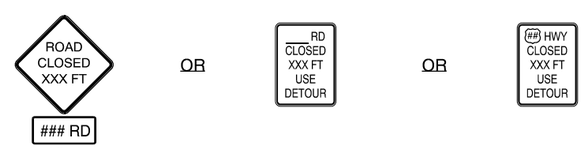

##x18 Rider
Rider width to be determined by width of street name.

48 x 60 (nom.)
Project Specific Design

48 x 60 (nom.)
Project Specific Design

- Use a minimum of two Type III barricades for a road closure. For roads ≥ 36' wide between curbs or edge of pavement, use a minimum of three Type III barricades for the closure point.
- For full road closures, the C or LR barricade may be used.
- Place additional signing as directed.
- To determine sign spacing A, B, & C, use the "TRAFFIC CONTROL DEVICES (TCD) SPACING TABLE" on Drg. TM800.

• • • • • 28" Tubular Markers
See TCD Spacing Table on TM800 for max. spacing.

UNDER TRAFFIC

UNDER CONSTRUCTION

To be accompanied by Drg. Nos. TM820 & TM821

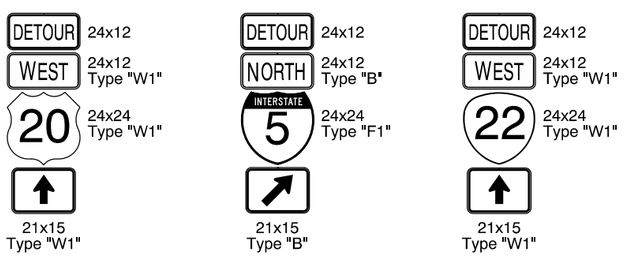

TYPICAL TRAILBLAZER ASSEMBLY

NOTE:
When detour routes overlap, each Route Shield will include a seperate cardinal direction, detour, and directional arrow auxiliary sign assembly.

CALC. BOOK NO. N/A

BASELINE REPORT DATE 01-JUL-2015

NOTE: All material and workmanship shall be in accordance with the current Oregon Standard Specifications

The selection and use of this Standard Drawing, while designed in accordance with generally accepted engineering principles and practices, is the sole responsibility of the user and should not be used without consulting a Registered Professional Engineer.

OREGON STANDARD DRAWINGS

CLOSURE DETAILS

2015

DATE	REVISION DESCRIPTION
01-01-2015	REVISED DRAWING AND NOTES
07-01-2015	REVISED DRAWING

tm840.dgn 01-JUL-2015

TM840

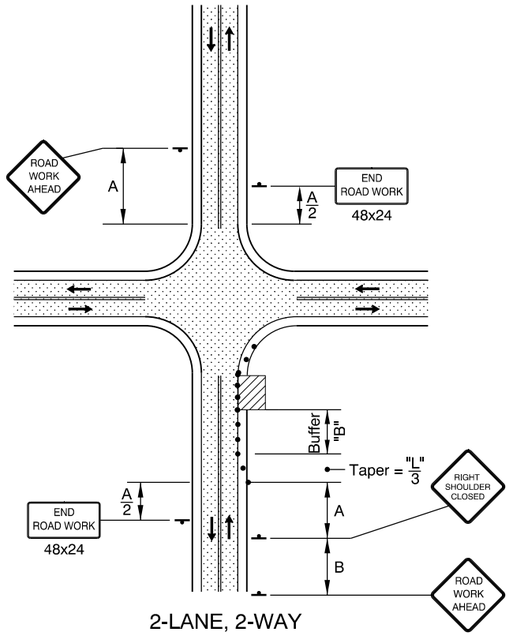

2-LANE, 2-WAY
SHOULDER CLOSURE

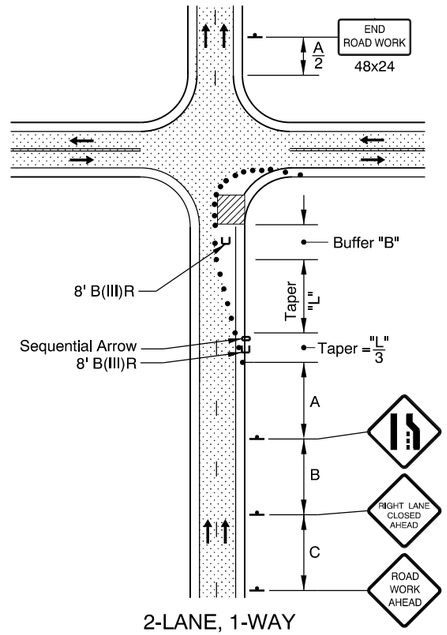

2-LANE, 1-WAY
RIGHT LANE CLOSURE

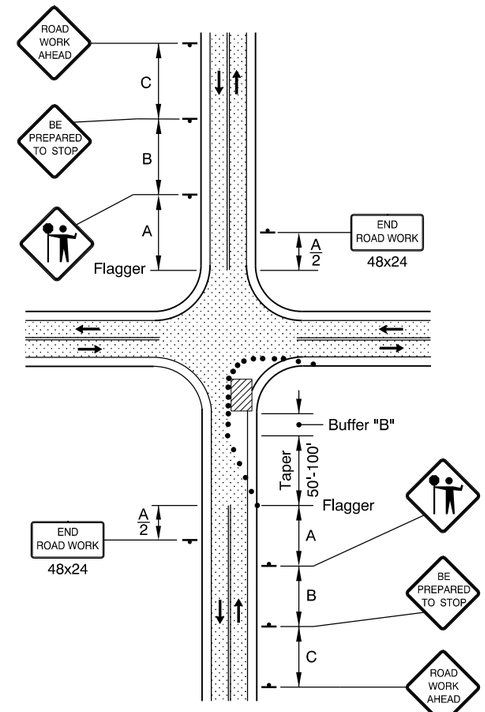

2-LANE, 2-WAY
ONE LANE CLOSURE

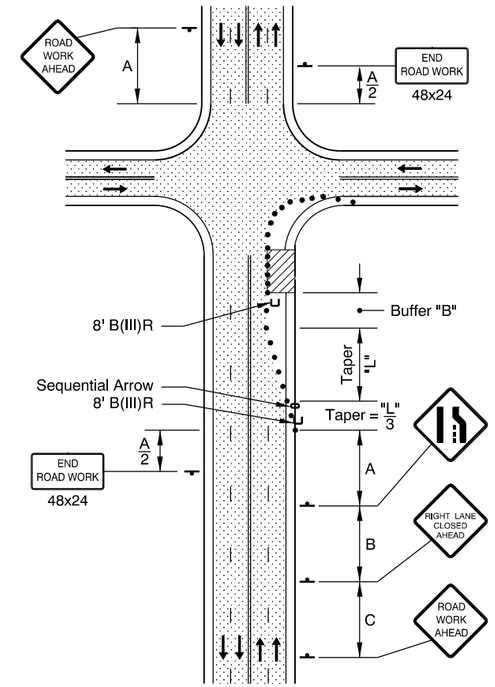

4-LANE, 2-WAY
RIGHT LANE CLOSURE, NEAR SIDE

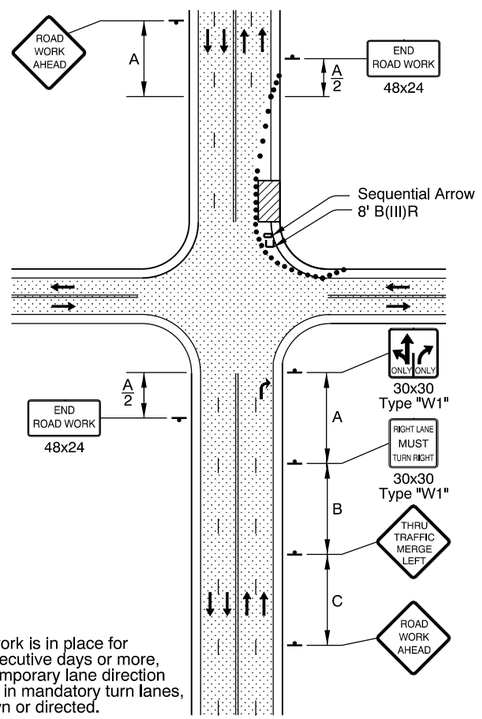

NOTES:

- When work is in place for 14 consecutive days or more, place temporary lane direction legends in mandatory turn lanes, as shown or directed.

4-LANE, 2-WAY
RIGHT LANE CLOSURE, FAR SIDE

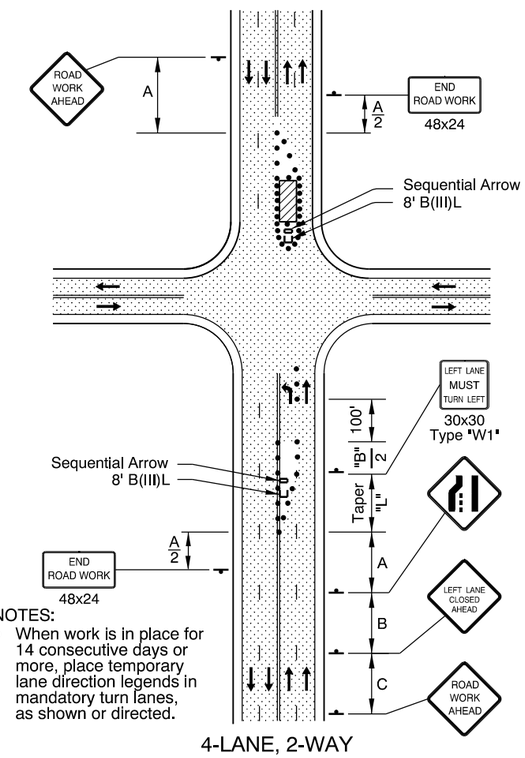

NOTES:

- When work is in place for 14 consecutive days or more, place temporary lane direction legends in mandatory turn lanes, as shown or directed.

4-LANE, 2-WAY
LEFT LANE CLOSURE, FAR SIDE

GENERAL NOTES FOR ALL DETAILS:

- Additional Traffic Control Measures (TCM) may be required for all legs of the intersection.
- The "BE PREPARED TO STOP" sign shall be used only in conjunction with the FLAGGER symbol sign.
- To determine Taper Length ("L") and Buffer Length ("B"), use the "MINIMUM LENGTHS TABLE" on Drg. TM800.
- For left lane or shoulder work, place TCD to close left lane or shoulder. Use "LEFT LANE CLOSED AHEAD" sign, "LEFT LANE ENDS" (W4-2L) symbol sign, or "LEFT SHOULDER CLOSED" sign, where applicable.
- To determine sign spacing A, B, and C, use "TRAFFIC CONTROL DEVICES (TCD) SPACING TABLE" on Drg. TM800.
- When a through road intersects within the work zone, place a "ROAD WORK AHEAD" sign in advance of the intersection at sign spacing A.
- Use plastic drums in lane closure tapers when the posted speed is 45 mph or greater.
- Where shoulder width is limited, Sequential Arrow may be placed within the lane closure taper.
- Place channelizing devices around intersection radii and construction areas at 10' spacing.

• • • • 28" Tubular Markers
See TCD Spacing Table on TM800 for max. spacings.

• • • 28" Tubular Markers
See TCD Spacing Table on TM800 for max. spacings.

UNDER TRAFFIC

UNDER CONSTRUCTION

To be accompanied by Drg. Nos. TM820, TM821 & TM840

The selection and use of this Standard Drawing, while designed in accordance with generally accepted engineering principles and practices, is the sole responsibility of the user and should not be used without consulting a Registered Professional Engineer.

CALC. BOOK NO. N/A

BASELINE REPORT DATE 01-JUL-2015

NOTE: All material and workmanship shall be in accordance with the current Oregon Standard Specifications

OREGON STANDARD DRAWINGS

INTERSECTION WORK ZONE DETAILS

2015

DATE	REVISION DESCRIPTION
01-01-2015	REVISED DRAWING
07-01-2015	REVISED DRAWING AND NOTES

tm841.dgn 01-JUL-2015

TM841

Effective Date: December 1, 2015 - May 31, 2016

tm842.dgn 01-JUL-2015

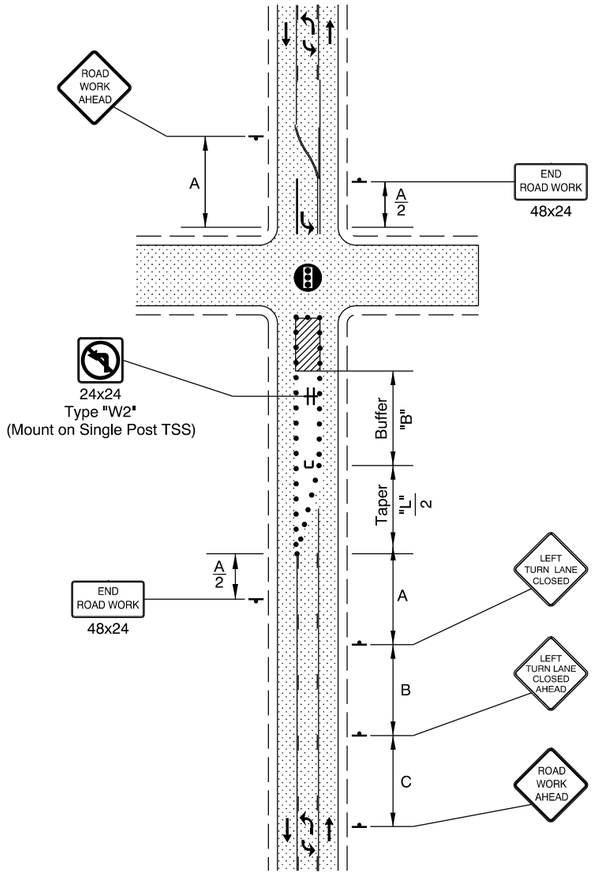

2-LANE, 2-WAY ROADWAY WITH LEFT TURN MEDIAN
LEFT TURN MEDIAN CLOSURE

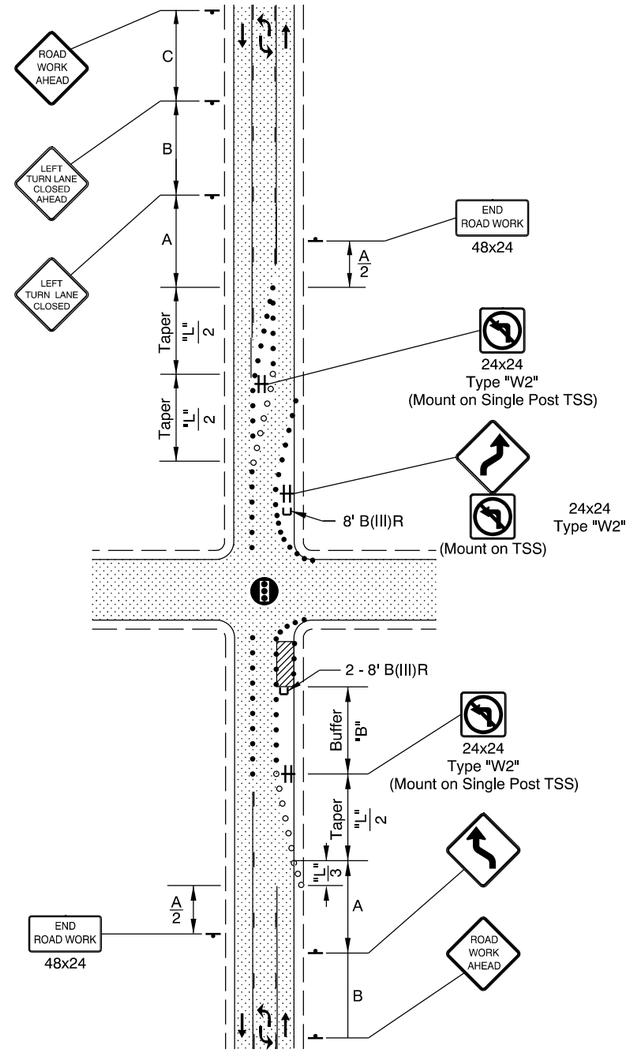

2-LANE, 2-WAY ROADWAY WITH LEFT TURN MEDIAN
RIGHT LANE CLOSURE, NEAR SIDE

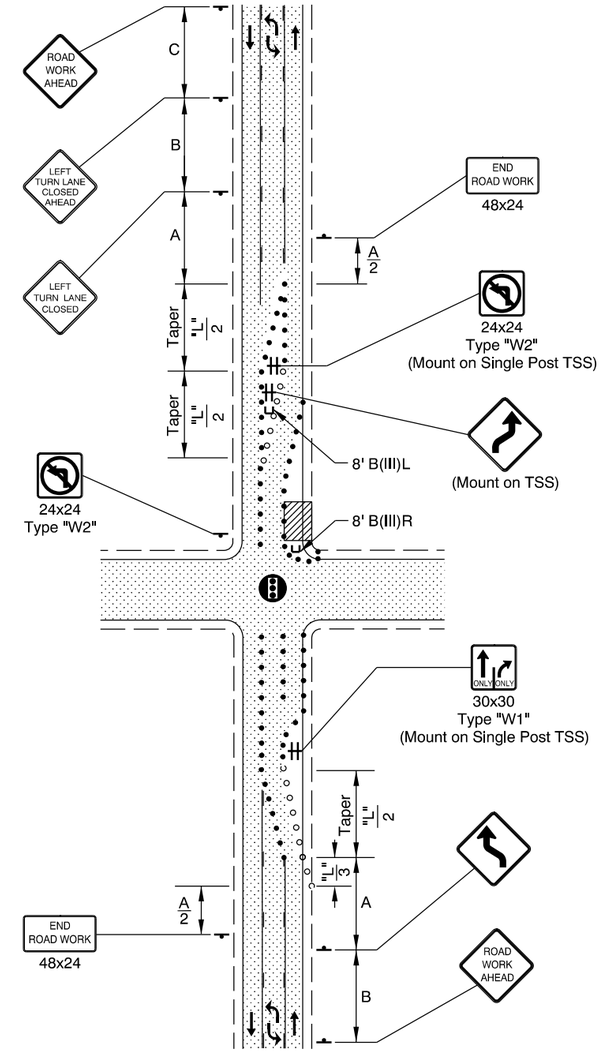

2-LANE, 2-WAY ROADWAY WITH LEFT TURN MEDIAN
RIGHT LANE CLOSURE, FAR SIDE

GENERAL NOTES FOR ALL DETAILS:

- Additional Traffic Control Measures (TCM) may be required for all legs of the intersection.
- To determine Taper Length ("L") and Buffer Length ("B") shown on this sheet, use the "MINIMUM LENGTHS TABLE" on Drg. TM800.
- Taper length of "L" for through lane shifting tapers may be used for higher speed roads.
- Taper length of "L"/2 for center turn lane closure may be used in areas with a high number of accesses within the work zone.
- When a through road intersects within the work zone, place a "ROAD WORK AHEAD" sign in advance of the intersection at sign spacing A.
- To determine sign spacing A, B, and C, use "TRAFFIC CONTROL DEVICES (TCD) SPACING TABLE" on Drg. TM800.
- Tubular markers may be used in lane closure tapers where the posted speed is less than 45 mph.

Signal

28" Tubular Markers
See TCD Spacing Table on TM800 for max. spacing

Temp. Plastic Drums
See TCD Spacing Table on TM800 for max. spacing

UNDER TRAFFIC

UNDER CONSTRUCTION

To be accompanied by Drg. Nos. TM820 & TM821

CALC. BOOK NO. N/A

BASELINE REPORT DATE 01-JUL-2015

NOTE: All material and workmanship shall be in accordance with the current Oregon Standard Specifications

The selection and use of this Standard Drawing, while designed in accordance with generally accepted engineering principles and practices, is the sole responsibility of the user and should not be used without consulting a Registered Professional Engineer.

OREGON STANDARD DRAWINGS

SIGNALIZED INTERSECTION DETAILS

2015

DATE	REVISION DESCRIPTION
01-01-2015	REVISED DRAWING AND NOTES
07-01-2015	REVISED DRAWING

TM842

tm843.dgn 01-JUL-2015

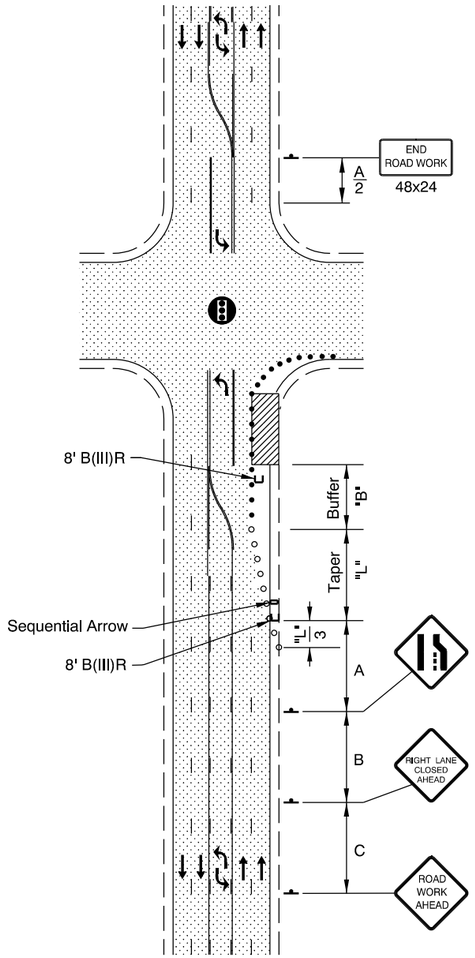

4-LANE, 2-WAY ROADWAY WITH LEFT TURN MEDIAN
RIGHT LANE CLOSURE

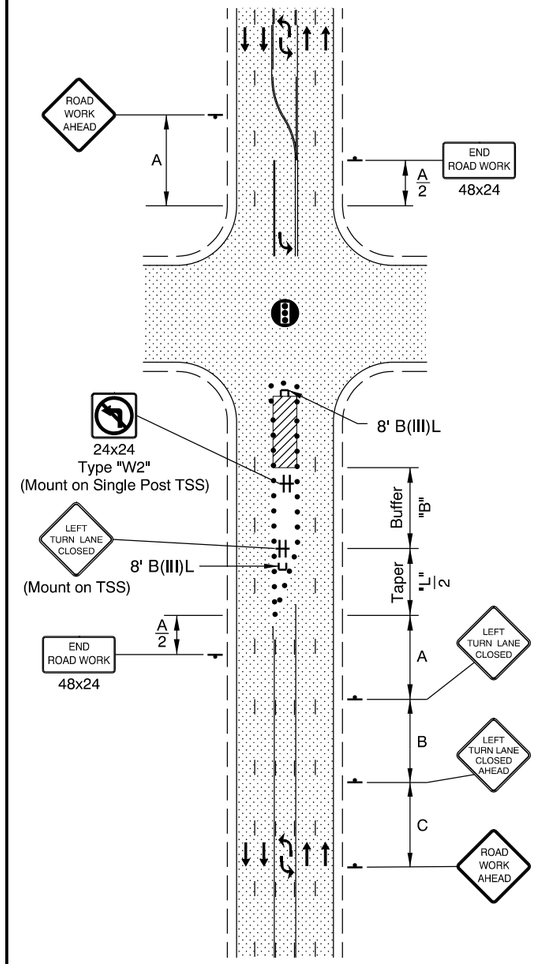

4-LANE, 2-WAY ROADWAY WITH LEFT TURN MEDIAN
LEFT TURN MEDIAN CLOSURE

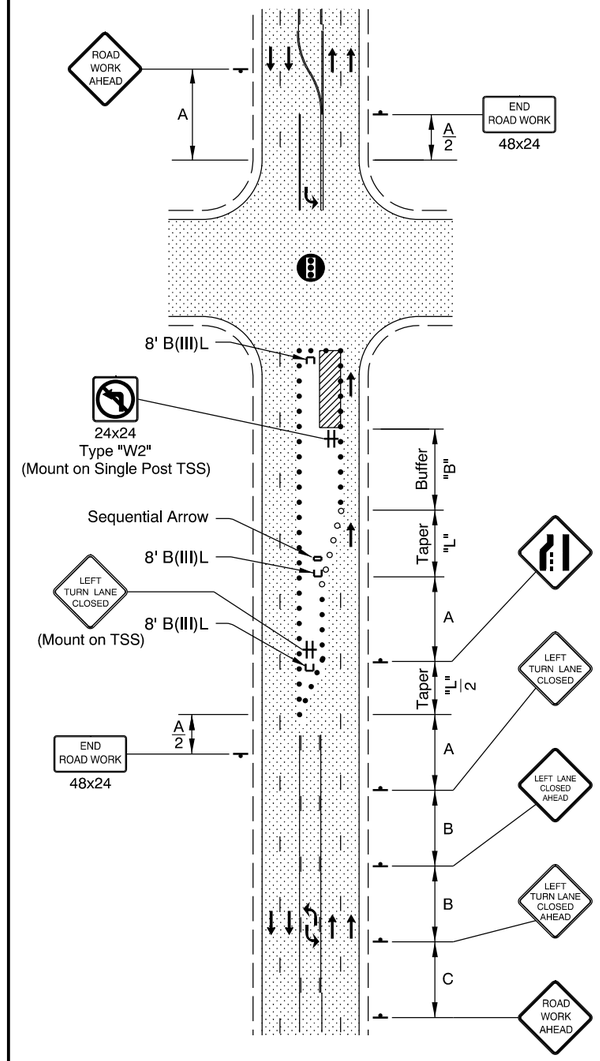

4-LANE, 2-WAY ROADWAY WITH LEFT TURN MEDIAN
LEFT TURN MEDIAN AND LEFT LANE CLOSURE

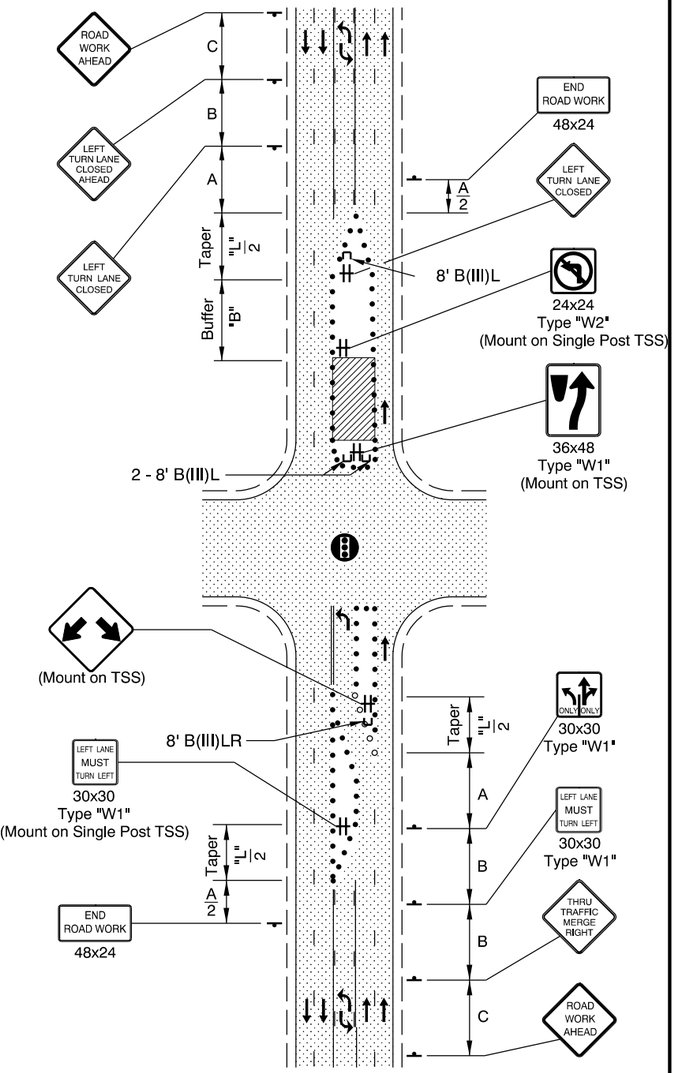

4-LANE, 2-WAY ROADWAY WITH LEFT TURN MEDIAN
LEFT TURN MEDIAN & LEFT LANE CLOSURE, FAR SIDE

GENERAL NOTES FOR ALL DETAILS:

- Additional Traffic Control Measures (TCM) may be required for all legs of the intersection.
- To determine Taper Length ("L") and Buffer Length ("B") shown on this sheet, use the "MIMIMUM LENGTHS TABLE" on Drg. TM800.
- When a through road intersects within the work zone, place a "ROAD WORK AHEAD" sign in advance of the intersection at sign spacing A.
- To determine sign spacing A, B, and C, use "TRAFFIC CONTROL DEVICES (TCD) SPACING TABLE" on Drg. TM800.
- Tubular markers may be used in lane closure tapers where the posted speed is less than 45 mph.
- Taper Length of "L" for the through-lane shifting tapers may be used for higher speed roads.
- Taper Length of "L"/2 for center turn lane closure may be used in areas with high number of accesses within the work zone.
- Place channelizing devices around intersection radii and construction accesses at 10' spacing.

Signal

• • • • • 28" Tubular Markers
See TCD Spacing Table on TM800 for max. spacing.

○ ○ ○ ○ ○ Temp. Plastic Drums
See TCD Spacing Table on TM800 for max. spacing.

UNDER TRAFFIC

UNDER CONSTRUCTION

To be accompanied by Drg. Nos. TM820 & TM821

CALC. BOOK NO. N/A

BASELINE REPORT DATE 01-JUL-2015

NOTE: All material and workmanship shall be in accordance with the current Oregon Standard Specifications

The selection and use of this Standard Drawing, while designed in accordance with generally accepted engineering principles and practices, is the sole responsibility of the user and should not be used without consulting a Registered Professional Engineer.

OREGON STANDARD DRAWINGS

MULTI-LANE SIGNALIZED INTERSECTION DETAILS

2015

DATE	REVISION DESCRIPTION
01-01-2015	REVISED DRAWING AND NOTES
07-01-2015	REVISED DRAWING

TM843

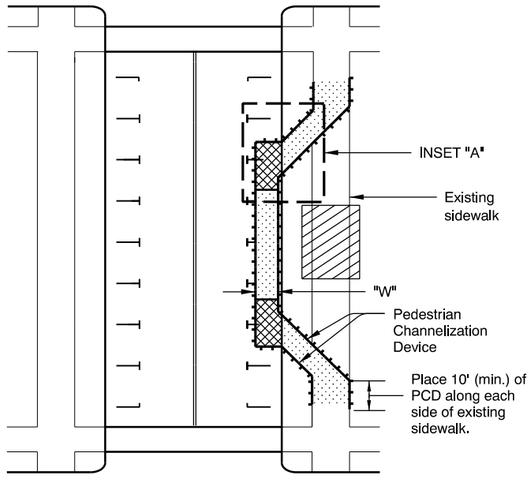

WITHIN ROADWAY
SIDEWALK DIVERSION

NOTES:
- Place or construct temp. sidewalk ramp, as needed.
- For roadways with a pre-construction posted speed of 40 mph or less.
- See inset "A" for Temp. Sidewalk Ramp details.
- "W" = 60", or, where 60" width cannot be maintained through the entire route, provide 36" min. width with 60" x 60" passing spaces every 200 ft.

NOTES:
- Ramp size will vary. Ramp must meet ADA requirements incl. max grade of 8.3% and max cross slope of 2%.

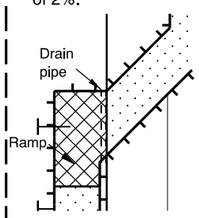

Temp. Sidewalk Ramp
INSET "A"

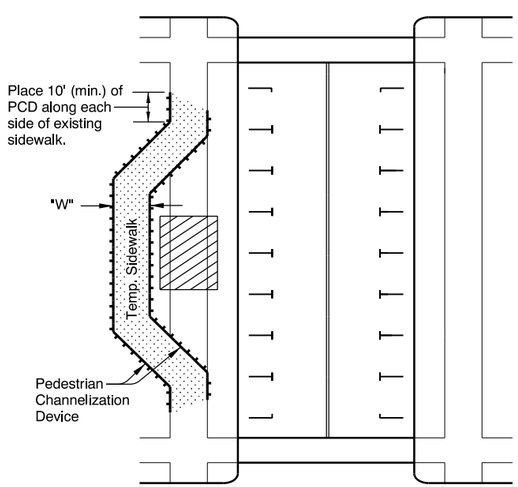

ADDITIONAL RIGHT OF WAY
SIDEWALK DIVERSION

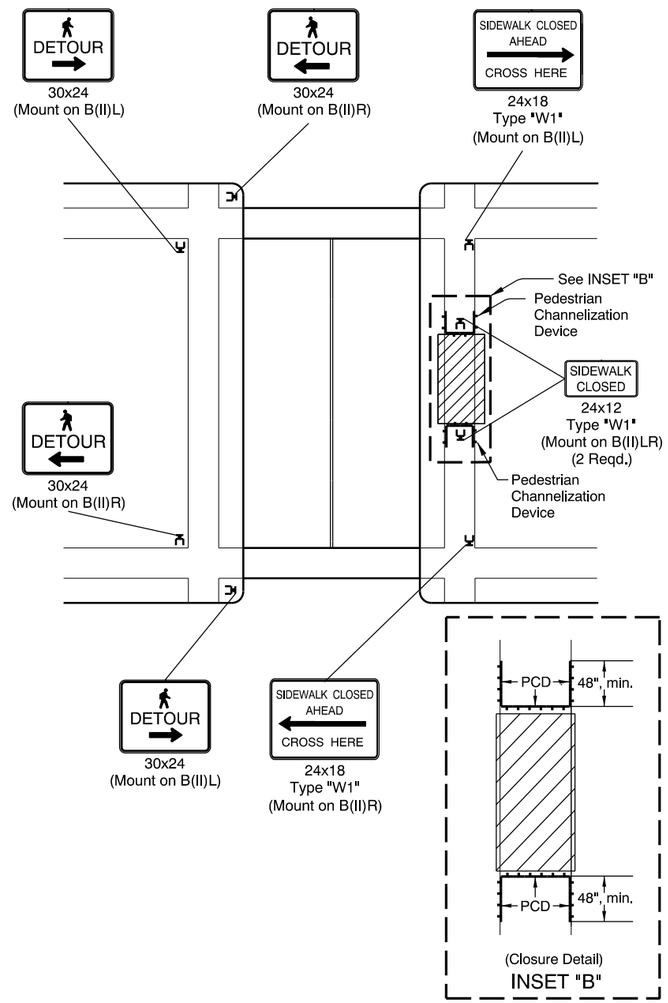

SIDEWALK CLOSURE, MIDBLOCK

NOTE:
- Limit work to one corner at a time to minimize pedestrian disruption and detour length.

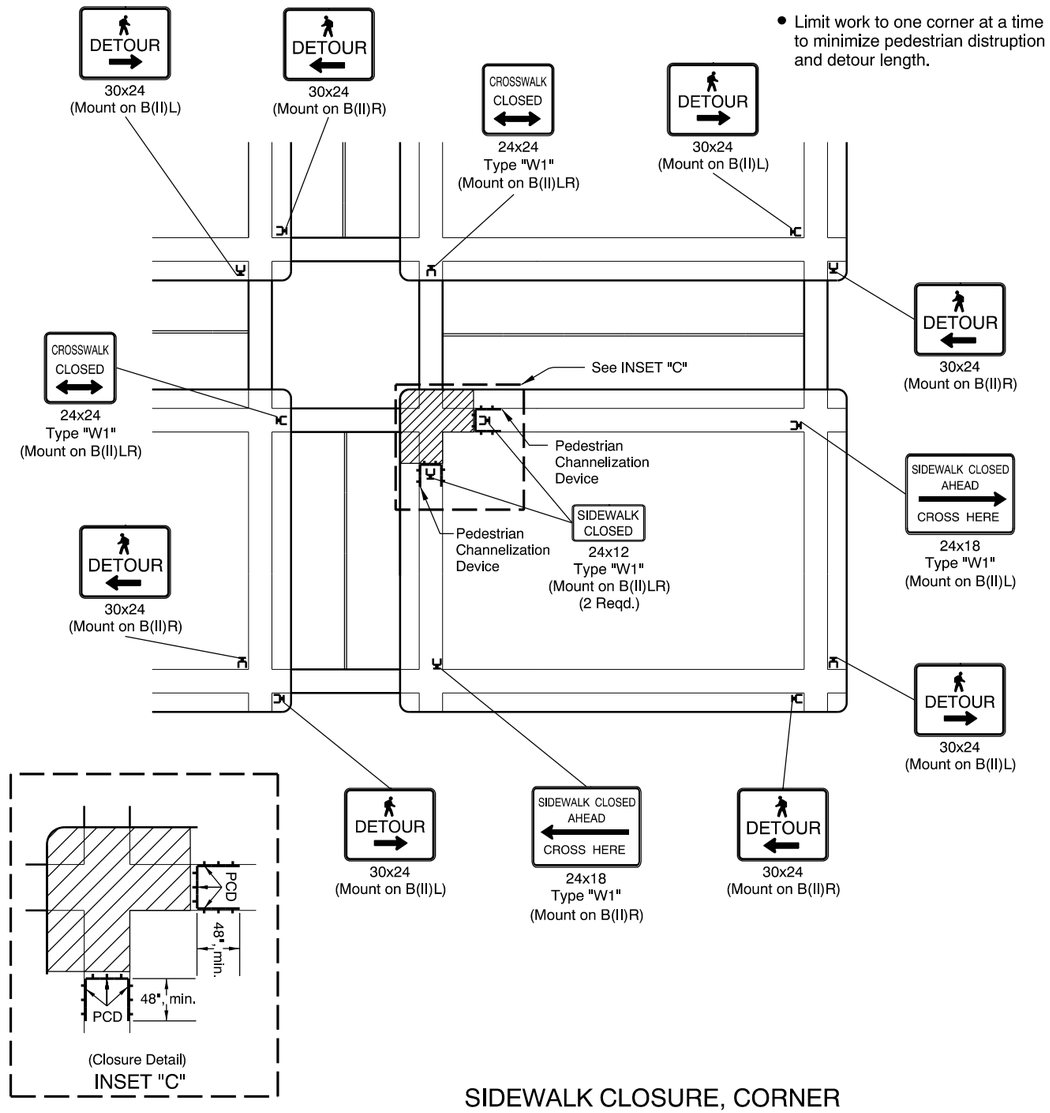

SIDEWALK CLOSURE, CORNER

GENERAL NOTES FOR ALL DETAILS:

- When closing or relocating crosswalks or other pedestrian facilities provide ADA compliant facilities. Include accessibility features consistent with existing pedestrian facilities by providing adequate slope transitions and surfacing.
- Provide non-slip, 60 inch minimum wide surface through entire pedestrian route. If not possible, provide 36" min. width with 60" x 60" passing spaces every 200 feet along the route.
- Only TCD for pedestrians are shown. Other devices may be necessary to control vehicular traffic.
- Stage work, as necessary, to provide a temporary pedestrian access route at all times. For roadways with no available detours, maintain one open sidewalk at all times.
- Minimize pedestrian out-of-direction travel.

UNDER PEDESTRIAN TRAFFIC
UNDER CONSTRUCTION
PEDESTRIAN CHANNELIZATION DEVICE

To be accompanied by Drg. Nos. TM820 & TM821

CALC. BOOK NO. N/A

BASELINE REPORT DATE 01-JUL-2015

NOTE: All material and workmanship shall be in accordance with the current Oregon Standard Specifications

The selection and use of this Standard Drawing, while designed in accordance with generally accepted engineering principles and practices, is the sole responsibility of the user and should not be used without consulting a Registered Professional Engineer.

OREGON STANDARD DRAWINGS

TEMPORARY
PEDESTRIAN ACCESS ROUTING

2015

DATE	REVISION DESCRIPTION
07-01-2015	REVISED DRAWING AND NOTES

tm844.dgn 01-JUL-2015

TM844

01-JUL-2015

tm850.dgn

NOTE:
- Continue "LOOSE GRAVEL" and "DO NOT PASS" signing throughout the area at spacing shown.
- Use advisory speed "XX", 20 mph less than the posted speed, or as directed."XX MPH" placard should not exceed 20 mph below the pre-construction posted speed.

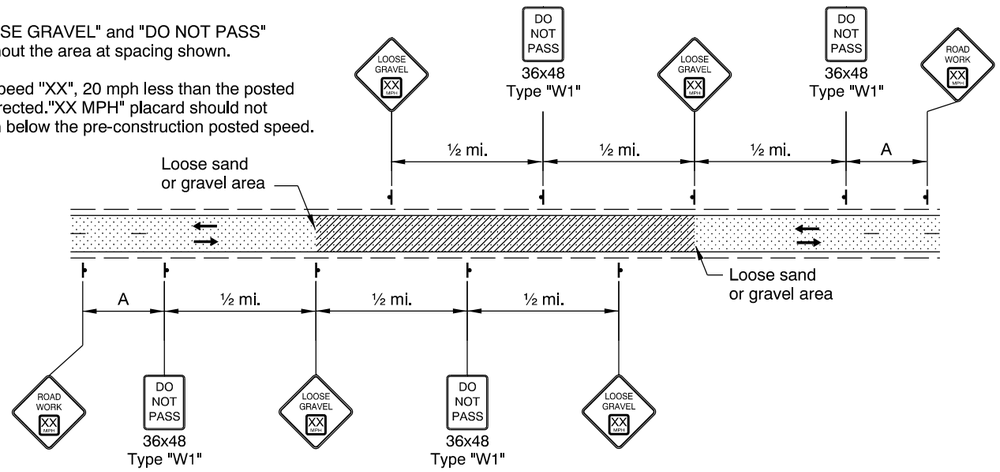

2-LANE, 2-WAY ROADWAY
LOOSE GRAVEL IN ROADWAY SIGNING

NOTE:
- Continue "ABRUPT EDGE" and "DO NOT PASS" signing throughout the area at spacing shown.

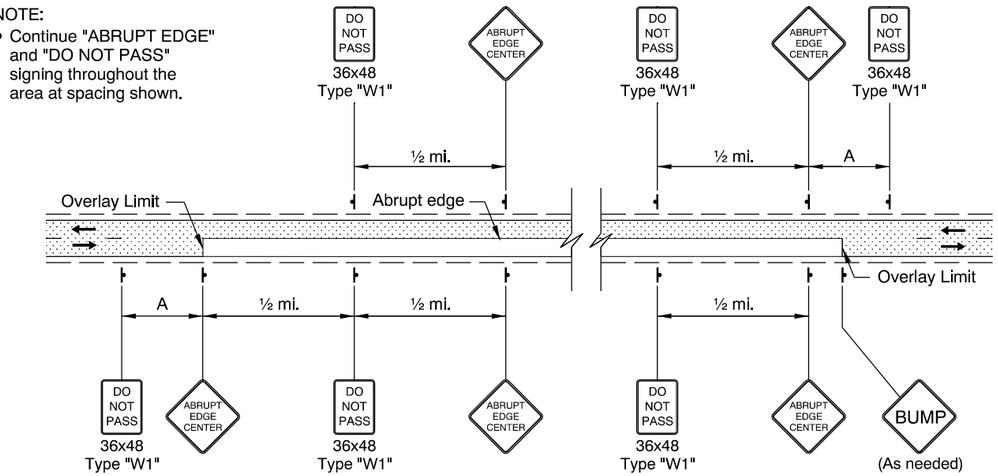

2-LANE, 2-WAY ROADWAY
OVERLAY AREA SIGNING

NOTES:
- Place Advance Flagger and additional signing when traffic queues extend beyond initial warning signing OR when sight distance is restricted.
- Relocate initial "ROAD WORK AHEAD" sign in advance of additional "BE PREPARED TO STOP" and Flagger Ahead signs, as shown.
- Place additional Tubular Markers for Flagger and Advance Flagger Stations according to FLAGGER STATION DELINEATION detail.

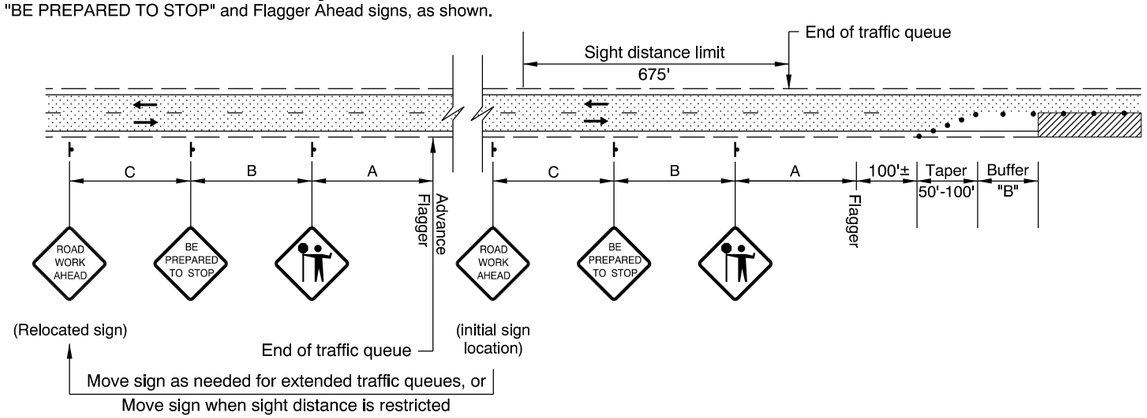

ADVANCE FLAGGER FOR EXTENDED TRAFFIC QUEUES

NOTE:
- When using pilot cars with flaggers to control traffic during paving operations, the Tubular Marker spacing along centerline may be increased to 200' within the Activity Area, as shown or as directed.
- Place additional Tubular Markers for Flagger Stations according to FLAGGER STATION DELINEATION detail.

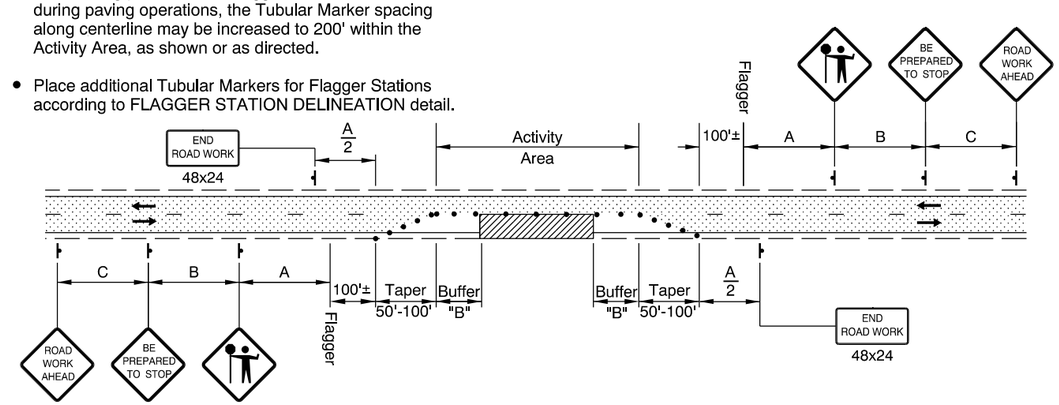

2-LANE, 2-WAY ROADWAY
ONE LANE CLOSURE

TM850

GENERAL NOTES FOR ALL DETAILS:
- The "FLAGGER" symbol sign shall be used only in conjunction with the "BE PREPARED TO STOP" sign.
- Cover existing passing zone signing, as directed.
- Install temporary striping as required.
- To determine Taper Length ("L") and Buffer Length ("B"), use the "MINIMUM LENGTHS TABLE" shown on Drg. No. TM800.
- To determine sign spacing A, B, and C, use "TRAFFIC CONTROL DEVICES (TCD) SPACING TABLE" on Drg. No. TM800.

• • • • • 28" Tubular Markers on 20' max. spacing for flagger tapers and stations

• • • 28" Tubular Markers See TCD Spacing Table on TM800 for max. spacing.

UNDER TRAFFIC

UNDER CONSTRUCTION

CONSTRUCTION UNDER TRAFFIC

To be accompanied by Drg. Nos. TM821

NOTE:
- Use a minimum of 3 tubular markers in shoulder taper on 10' spacing for flagger station delineation.

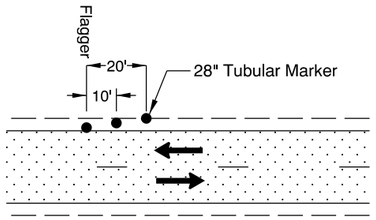

FLAGGER STATION DELINEATION

CALC. BOOK NO. N/A

BASELINE REPORT DATE 01-JUL-2015

NOTE: All material and workmanship shall be in accordance with the current Oregon Standard Specifications

The selection and use of this Standard Drawing, while designed in accordance with generally accepted engineering principles and practices, is the sole responsibility of the user and should not be used without consulting a Registered Professional Engineer.

OREGON STANDARD DRAWINGS

2-LANE, 2-WAY ROADWAYS

2015

DATE	REVISION DESCRIPTION
01-01-2015	REVISED DRAWING AND NOTES
07-01-2015	REVISED DRAWING AND NOTES