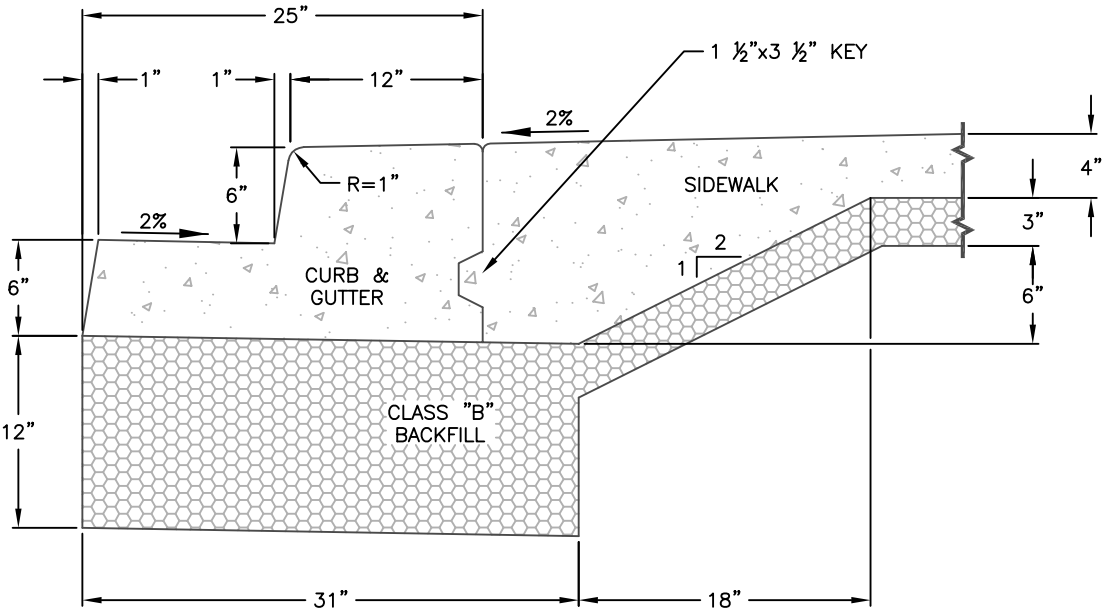

CONSTRUCTION NOTES

1. CONCRETE SHALL BE 3300 PSI AT 28 DAYS WITH A SLUMP RANGE OF 2" TO 4".
2.. BASE ROCK SHALL BE CLASS "B" BACKFILL AND COMPACTED TO 95% MAXIMUM DENSITY PER AASHTO T-180.
3. CURB & GUTTER AND SIDEWALK SHALL BE CONSTRUCTED IN SEPARATE POURS.
4. CONTRACTION JOINTS DEPTH SHALL BE A MINIMUM ⅓ OF THE CONCRETE THICKNESS. CONTRACTION JOINTS ARE REQUIRED AT EACH POINT OF TANGENCY AND EVERY 10 FEET OF CURB LENGTH. CONTRACTION JOINTS SHALL ALIGN WITH SIDEWALK JOINTS. SIDEWALK CONTRACTION JOINTS SHALL BE INSTALLED PER DETAIL #702 & #703.
5. THE BACK OF CURB SHALL BE TROWLED WITH A ½" RADIUS JOINT.
6. ALL SURFACES SHALL BE LIGHTLY BROOMED.
7. WHERE EXISTING CURB IS TO REMOVED OR REPLACED, THE CURB SHALL BE SAWCUT AND REMOVED AT A JOINT.

ATTENTION:

ALL CONCRETE WORK WITHIN THE PUBLIC RIGHT-OF-WAY REQUIRES SUB-GRADE, BASE ROCK, AND CONCRETE FORM INSPECTION AND APPROVAL BY THE CITY INSPECTOR PRIOR TO POURING CONCRETE. CALL 503 786-7575, 24 HOURS IN ADVANCE OF WORK TO SCHEDULE AN INSPECTION.

MILWAUKIE, OREGON · FOUNDED 1847

CITY OF MILWAUKIE, OREGON – PUBLIC WORKS DEPT.

DOWNTOWN CURB & GUTTER

DRAWING NO. 700

APPROVED Gary Parkin 5/10

CITY ENGINEER DATE

NO.	REVISIONS	DATE	BY
1	NEW DRAWING	10/30/09	ZJW

MAY 2010

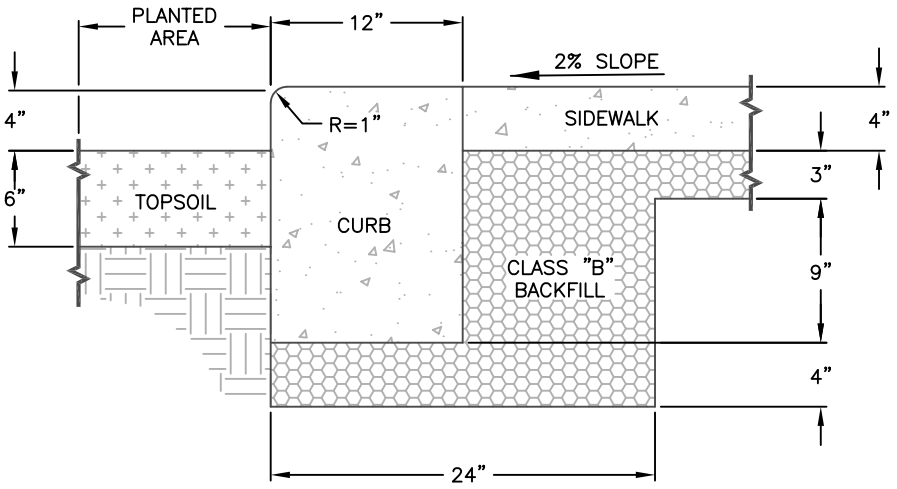

12" STANDARD CURB DETAIL

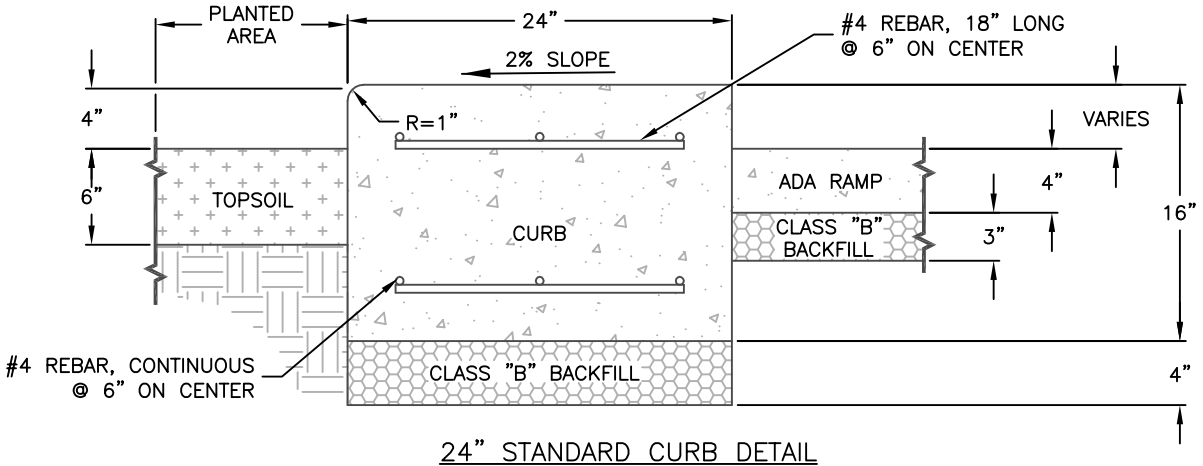

24" STANDARD CURB DETAIL

CONSTRUCTION NOTES

1. CONCRETE SHALL BE 3300 PSI AT 28 DAYS WITH A SLUMP RANGE OF 2" TO 4".
2.. BASE ROCK SHALL BE CLASS "B" BACKFILL AND COMPACTED TO 95% MAXIMUM DENSITY OF AASHTO T-180.
3. REBAR SHALL BE INSTALLED WITH A 3" CLEARANCE FROM ALL CONCRETE SURFACES.
4. CURB AND SIDEWALK SHALL BE CONSTRUCTED IN SEPARATE POURS.
5. CONTRACTION JOINTS DEPTH SHALL BE A MINIMUM ⅓ OF THE CONCRETE THICKNESS. CONTRACTION JOINTS ARE REQUIRED AT EACH POINT OF TANGENCY AND EVERY 10 FEET OF CURB LENGTH. CONTRACTION JOINTS SHALL ALIGN WITH SIDEWALK JOINTS. SIDEWALK CONTRACTION JOINTS SHALL BE INSTALLED PER DRAWING NO. #702 & #703.
6. THE BACK OF CURB SHALL BE TROWELED WITH A ½" RADIUS JOINT.
7. ALL SURFACES SHALL BE LIGHTLY BROOMED.
8. WHERE EXISTING CURB IS TO REMOVED OR REPLACED, THE CURB SHALL BE SAWCUT AND REMOVED AT A JOINT.

ATTENTION:

ALL CONCRETE WORK WITHIN THE PUBLIC RIGHT-OF-WAY REQUIRES SUB-GRADE, BASE ROCK, AND CONCRETE FORM INSPECTION AND APPROVAL BY THE CITY INSPECTOR PRIOR TO POURING CONCRETE. CALL 503 786-7575, 24 HOURS IN ADVANCE OF WORK TO SCHEDULE AN INSPECTION.

CITY OF MILWAUKIE, OREGON – PUBLIC WORKS DEPT.

DOWNTOWN CURB

DRAWING NO. 701

APPROVED Gary Parkin 5/10

CITY ENGINEER DATE

NO.	REVISIONS	DATE	BY
1	NEW DRAWING	10/30/09	ZJW

MAY 2010

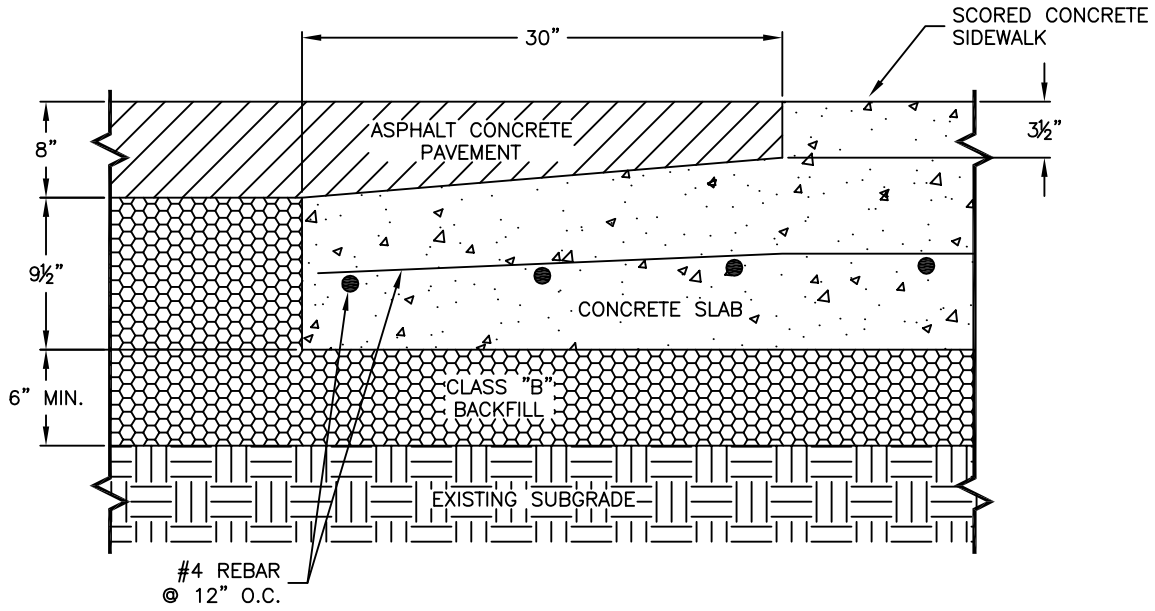

CONSTRUCTION NOTES

1. CONCRETE SHALL BE 4000 PSI AT 28 DAYS WITH A SLUMP RANGE OF 2" TO 4".
2. BASE ROCK SHALL BE CLASS "B" BACKFILL COMPACTED TO 95% MAXIMUM DENSITY PER AASHTO T-180.
3. ALL EXPOSED SURFACES SHALL BE LIGHTLY BROOMED.

ATTENTION:

ALL CONCRETE WORK WITHIN THE PUBLIC RIGHT-OF-WAY REQUIRES SUB-GRADE, BASE ROCK, AND CONCRETE FORM INSPECTION AND APPROVAL BY THE CITY INSPECTOR PRIOR TO POURING CONCRETE. CALL 503 786-7575, 24 HOURS IN ADVANCE OF WORK TO SCHEDULE AN INSPECTION.

CITY OF MILWAUKIE, OREGON – PUBLIC WORKS DEPT.

DOWNTOWN CROSSWALK TRANSITION

DRAWING NO. 702

APPROVED Gary Parkin 5/10

CITY ENGINEER DATE

NO.	REVISIONS	DATE	BY
1	NEW DRAWING	10/30/09	ZJW

MAY 2010

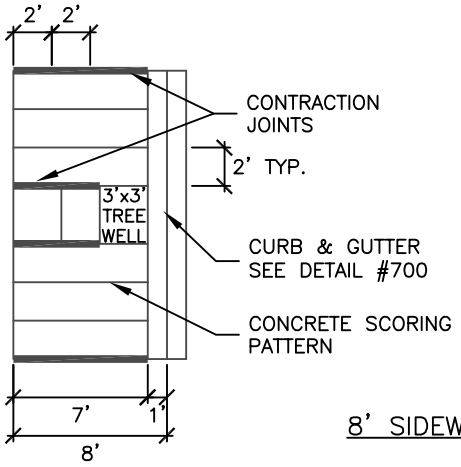

8' SIDEWALK WIDTH

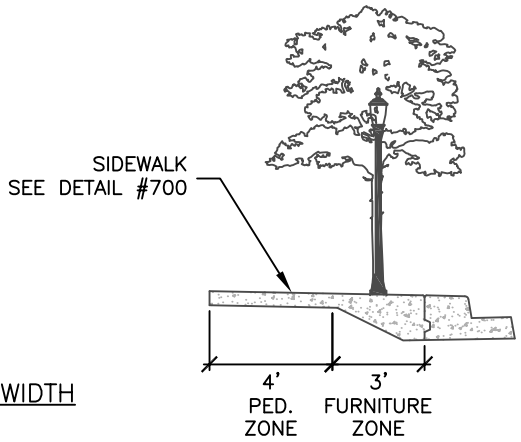

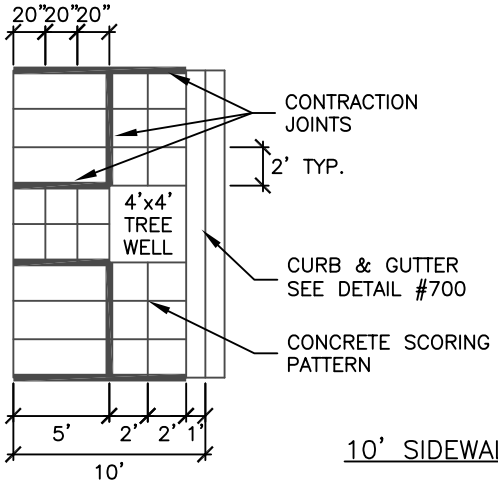

10' SIDEWALK WIDTH

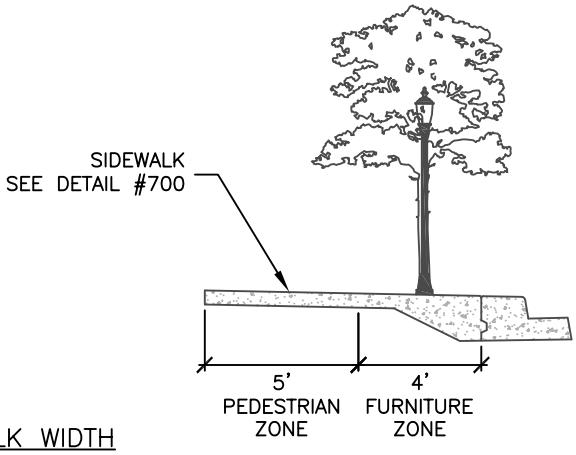

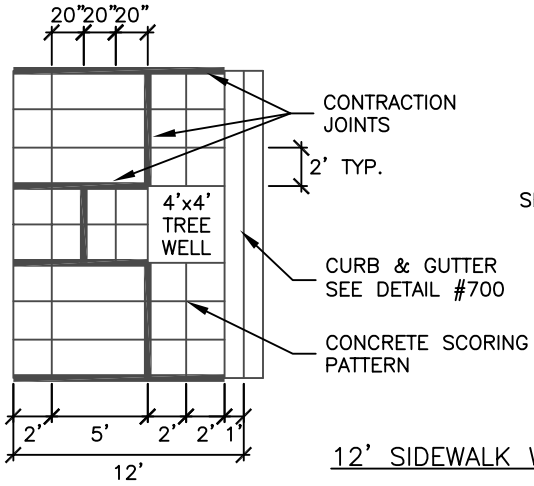

12' SIDEWALK WIDTH

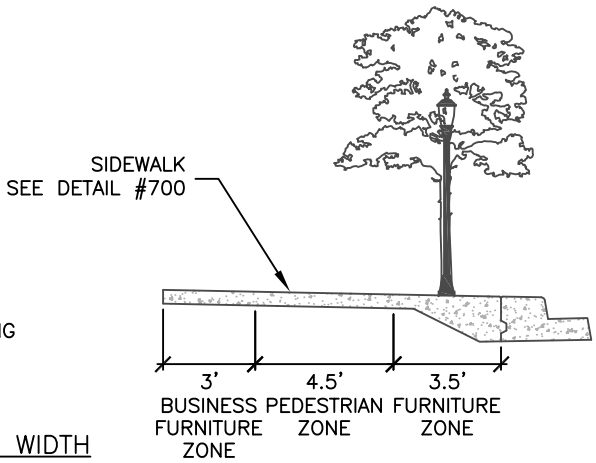

CITY OF MILWAUKIE, OREGON – PUBLIC WORKS DEPT.

MILWAUKIE, OREGON FOUNDED 1847

DOWNTOWN SIDEWALK

DRAWING NO. 703

APPROVED Gary Parkin 5/10

CITY ENGINEER DATE

NO.	REVISIONS	DATE	BY
1	NEW DRAWING	10/30/09	ZJW

MAY 2010

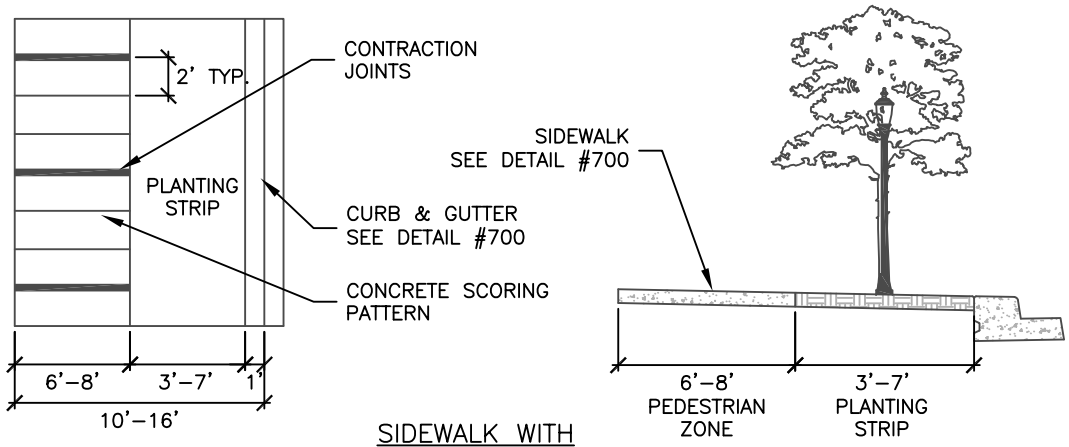

SIDEWALK WITH PLANTING STRIP

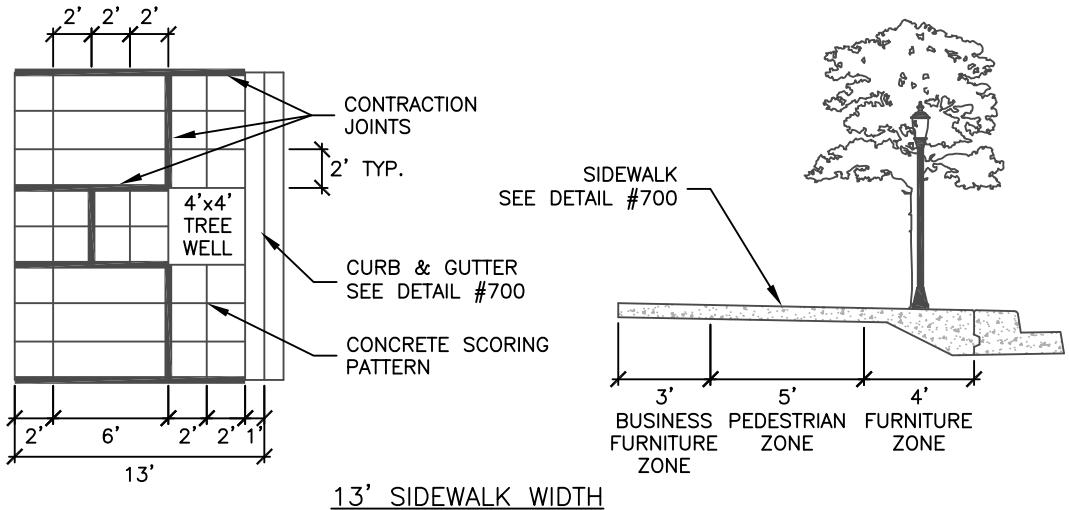

13' SIDEWALK WIDTH

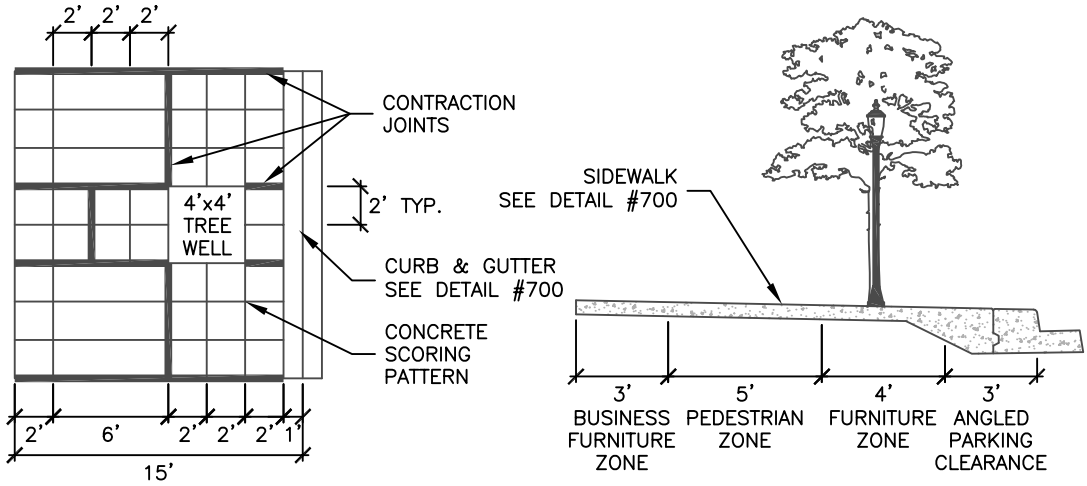

15' SIDEWALK WIDTH

CITY OF MILWAUKIE, OREGON – PUBLIC WORKS DEPT.

MILWAUKIE, OREGON FOUNDED 1847

DOWNTOWN SIDEWALK

DRAWING NO. 704

APPROVED Gary Parkin 5/10

CITY ENGINEER DATE

NO.	REVISIONS	DATE	BY
1	NEW DRAWING	10/30/09	ZJW

MAY 2010

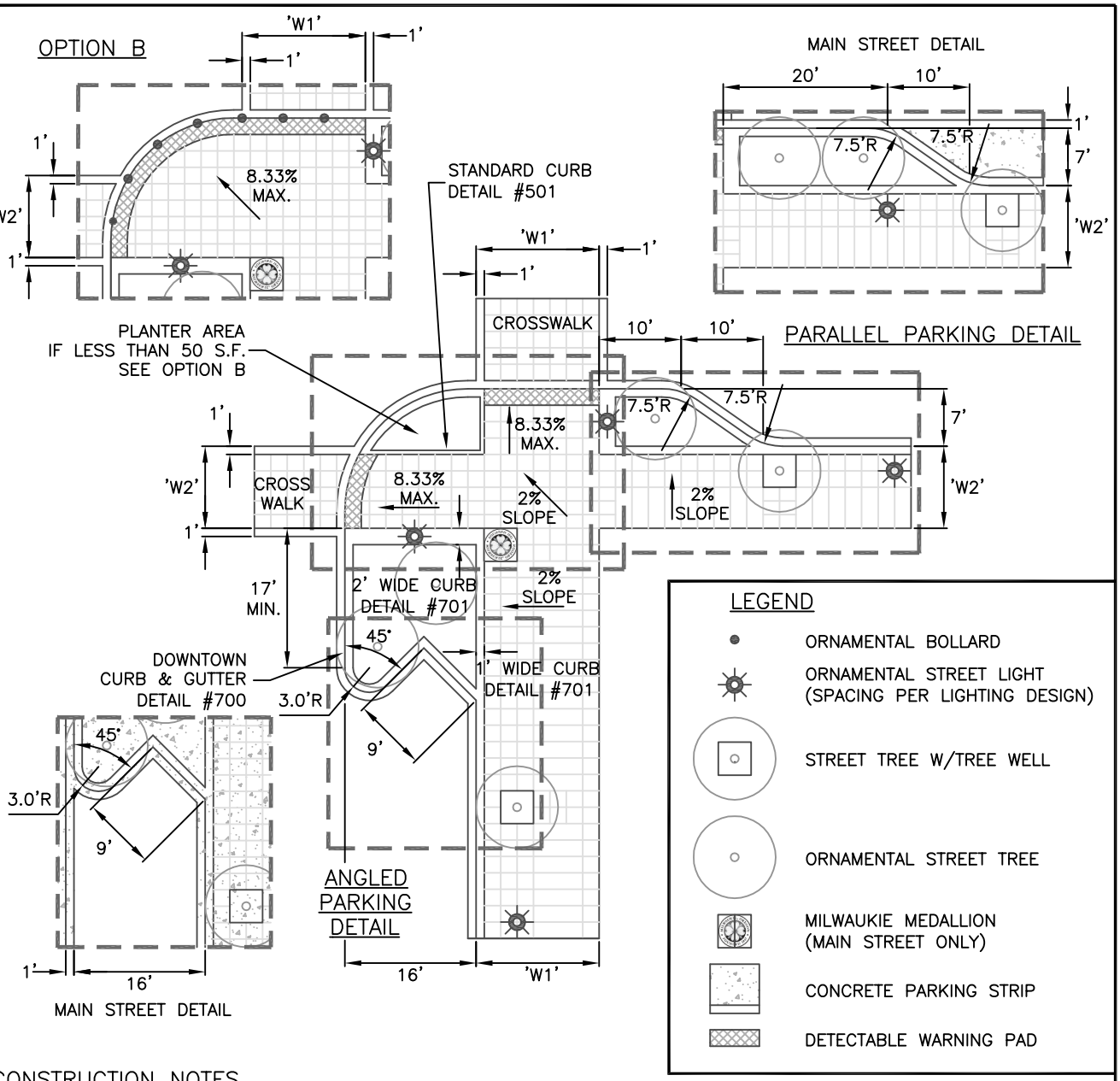

CONSTRUCTION NOTES

1. SIDEWALK WIDTH, DIMENSION 'W1' AND 'W2', PER STREET CROSS–SECTION DETAIL FOR STREETS BEING DESIGNED.
2. PROVIDE 35' CURB RADIUS, DIMENSION "R1", FOR ALL STREET CORNERS WITH RIGHT–TURNING TRANSIT MOVEMENTS. PROVIDE 15' CURB RADIUS FOR ALL OTHER STREET CORNERS.
3. CROSSWALK SCORING SHALL MATCH ADJACENT SIDEWALK, MAXIMUM 2'x2' SQUARES. SEE DETAIL #702 FOR CROSSWALK TO STREET PAVEMENT TRANSITION DETAIL.
4. CONCRETE PARKING AREA SHALL BE CONSTRUCTED PER STREET CROSS–SECTION DETAIL FOR MAIN STREET.
5. DETECTABLE WARNING PAD SHALL BE 24" LONG IN DIRECTION OF TRAVEL AND INSTALLED ALONG THE FULL WIDTH OF THE BOTTOM OF THE SIDEWALK RAMP. PADS SHALL BE CUT TO FIT ALONG CURB RADIUS. MASCO CAST–IN–TACT (BLACK) OR APPROVED EQUAL.

MILWAUKIE, OREGON · FOUNDED 1847

CITY OF MILWAUKIE, OREGON – PUBLIC WORKS DEPT.

Downtown Intersection Curb Extension

DRAWING NO. 705

APPROVED Gary Parkin 5/10

CITY ENGINEER DATE

NO.	REVISIONS	DATE	BY
1	NEW DRAWING	10/30/09	ZJW

MAY 2010

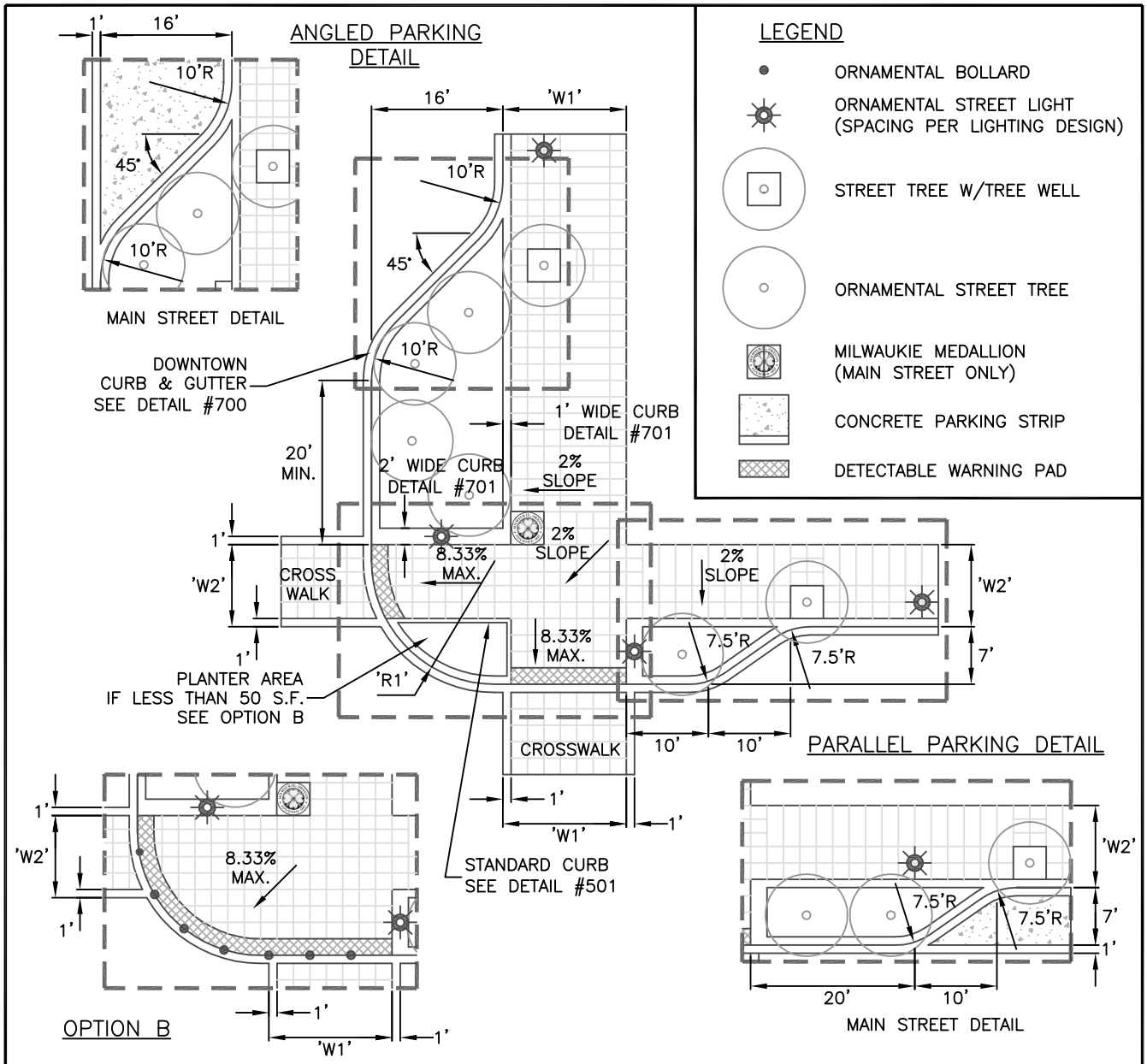

CONSTRUCTION NOTES

1. SIDEWALK WIDTH, DIMENSION 'W1' AND 'W2', PER STREET CROSS–SECTION DETAIL FOR STREETS BEING DESIGNED.
2. PROVIDE 35' CURB RADIUS, DIMENSION "R1", FOR ALL STREET CORNERS WITH RIGHT–TURNING TRANSIT MOVEMENTS. PROVIDE 15' CURB RADIUS FOR ALL OTHER STREET CORNERS.
3. CROSSWALK SCORING SHALL MATCH ADJACENT SIDEWALK, MAXIMUM 2'x2' SQUARES. SEE DETAIL #702 FOR CROSSWALK TO STREET PAVEMENT TRANSITION DETAIL.
4. CONCRETE PARKING AREA SHALL BE CONSTRUCTED PER STREET CROSS–SECTION DETAIL FOR MAIN STREET.
5. DETECTABLE WARNING PAD SHALL BE 24" LONG IN DIRECTION OF TRAVEL AND INSTALLED ALONG THE FULL WIDTH OF THE BOTTOM OF THE SIDEWALK RAMP. PADS SHALL BE CUT TO FIT ALONG CURB RADIUS. MASCO CAST–IN–TACT (BLACK) OR APPROVED EQUAL.

MILWAUKIE, OREGON · FOUNDED 1847

CITY OF MILWAUKIE, OREGON – PUBLIC WORKS DEPT.

Downtown Intersection Curb Extension

DRAWING NO. **706**

APPROVED Gary Parkin 5/10
CITY ENGINEER DATE

NO.	REVISIONS	DATE	BY
1	NEW DRAWING	10/30/09	ZJW

MAY 2010

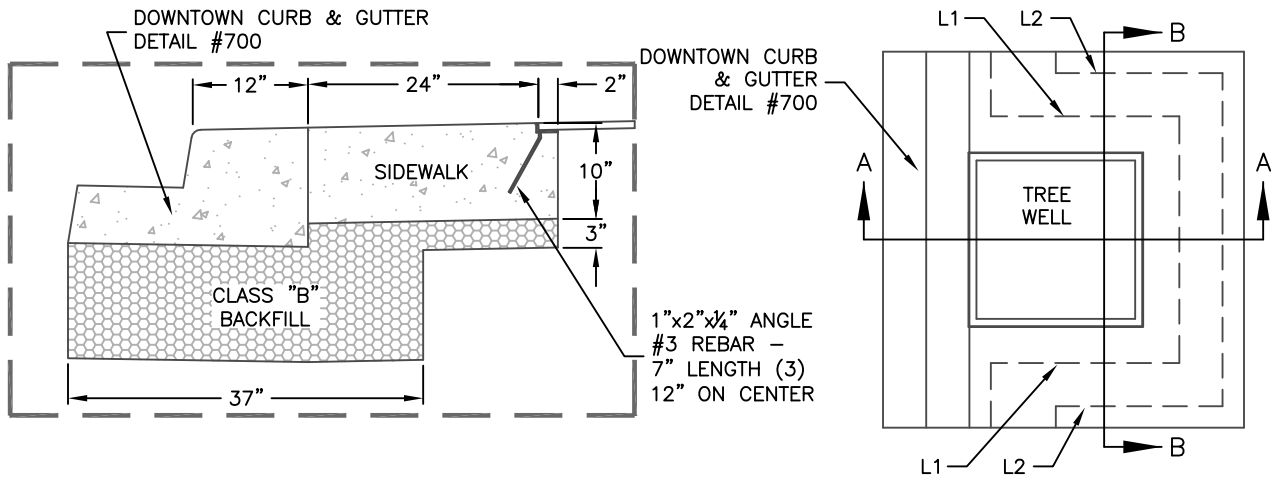

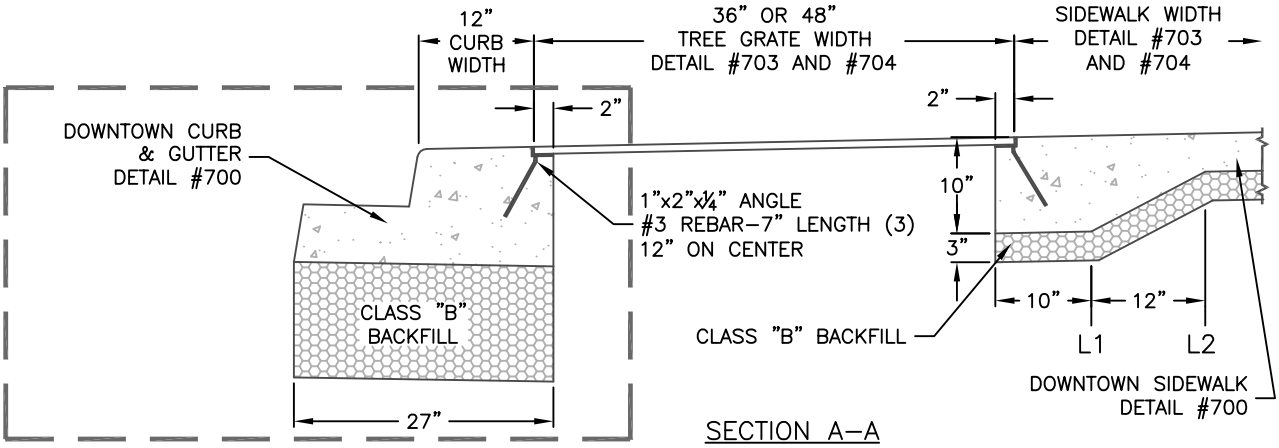

SECTION A–A

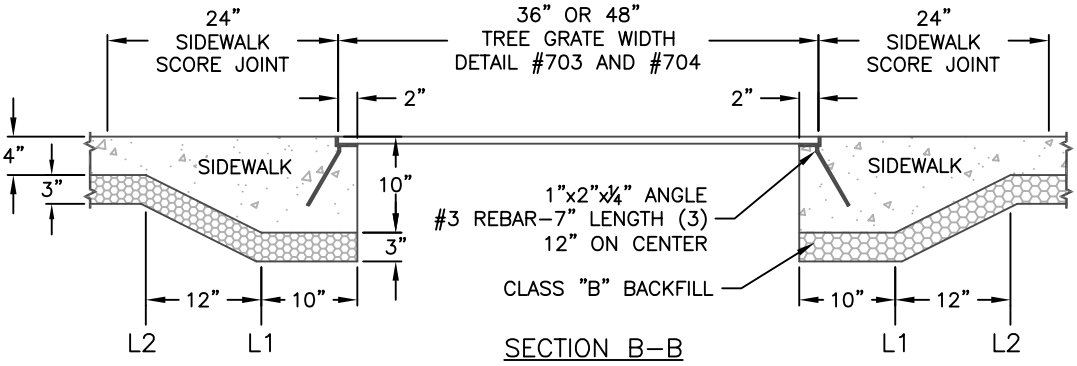

SECTION B–B

CONSTRUCTION NOTES

1. CONCRETE SHALL BE 3300 PSI AT 28 DAYS WITH A SLUMP RANGE OF 2" TO 4".
2.. BASE ROCK SHALL BE CLASS "B" BACKFILL COMPACTED TO 95% MAXIMUM DENSITY PER AASHTO T–180.
3. ALL CONCRETE SURFACES SHALL BE LIGHTLY BROOMED.

CITY OF MILWAUKIE, OREGON – PUBLIC WORKS DEPT.

STREET TREE GRATE

DRAWING NO. 707

APPROVED Gary Parkin 5/10
CITY ENGINEER DATE

NO.	REVISIONS	DATE	BY
1	NEW DRAWING	10/30/09	ZJW

MAY 2010

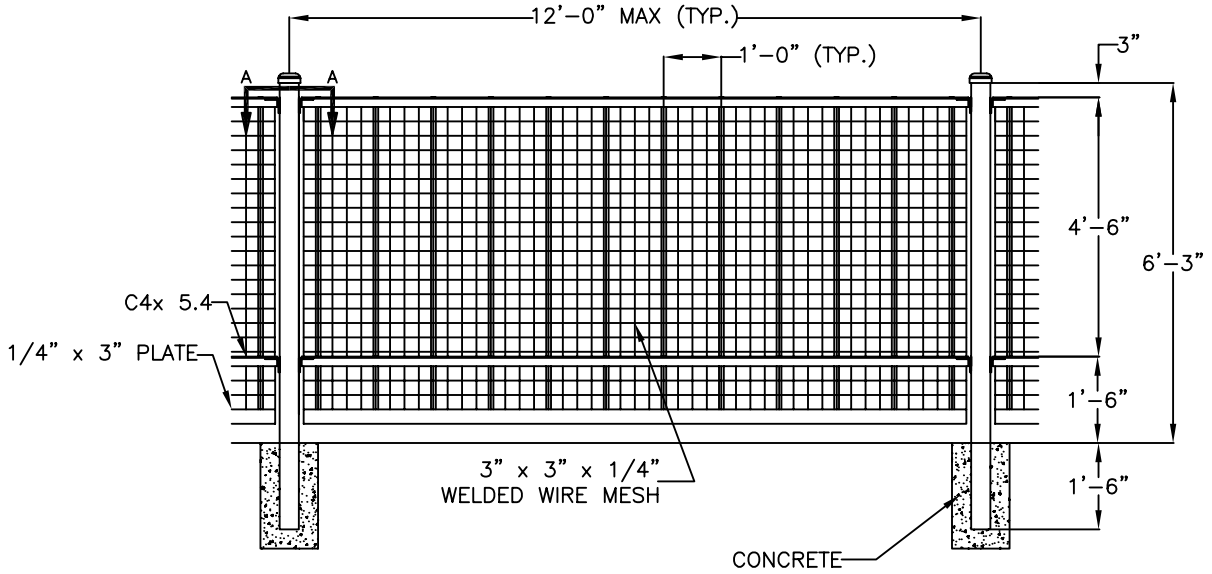

ELEVATION – TYPICAL ORNAMENTAL PANEL
1:40 SCALE

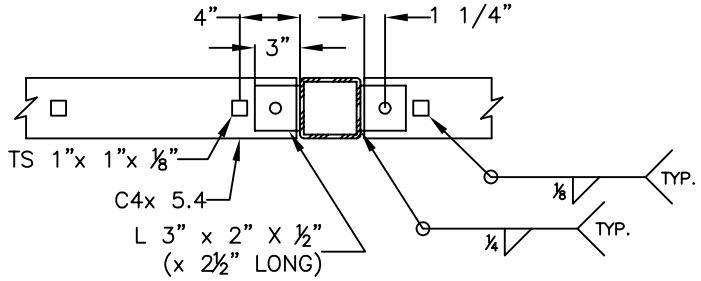

SECTION "A–A"
1:30 SCALE

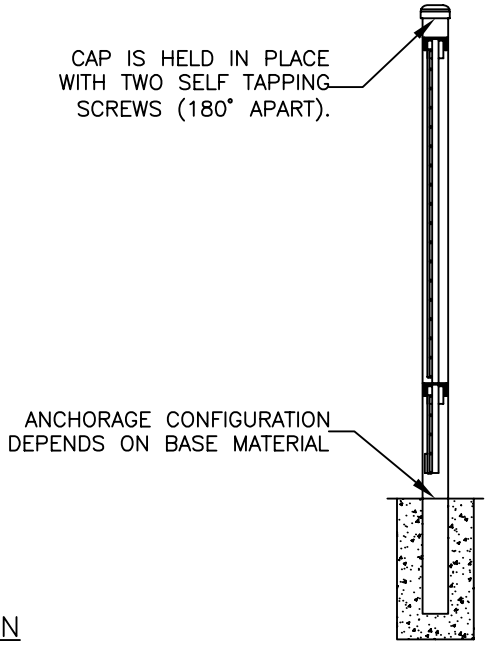

SECTION
1:30 SCALE

NOTES:

- SLOPE OF PANELS MAY VARY. PROVIDE 3/16" LONG FLARE BEVEL GROOVE WELDS @ 2'-0" EACH WAY TO 1" SQUARE TUBES.
- PROVIDE A MINIMUM OF 2 WELDS IN MESH BELOW BOTTOM C4 x 5.4.
- WIRE MESH TO BE PARALLEL WITH VERTICAL BARS. PLACE THE WELD WIRE MESH ON THE OUTSIDE FACE OF THE FENCE.
- MAXIMUM GAP BETWEEN WIRE MESH AND EDGE MEMBERS SHALL NOT EXCEED 1/4".
- FENCE MATERIAL, POSTS, AND BRACKETS SHALL BE POWDER COATED BLACK PRIOR TO FINAL INSTALLATION ON SITE.

CITY OF MILWAUKIE

CITY OF MILWAUKIE, OREGON – PUBLIC WORKS DEPT.

Decorative Fence

DRAWING NO. 708

APPROVED Gary Parkin 5/10
CITY ENGINEER DATE

NO.	REVISIONS	DATE	BY

MAY 2010

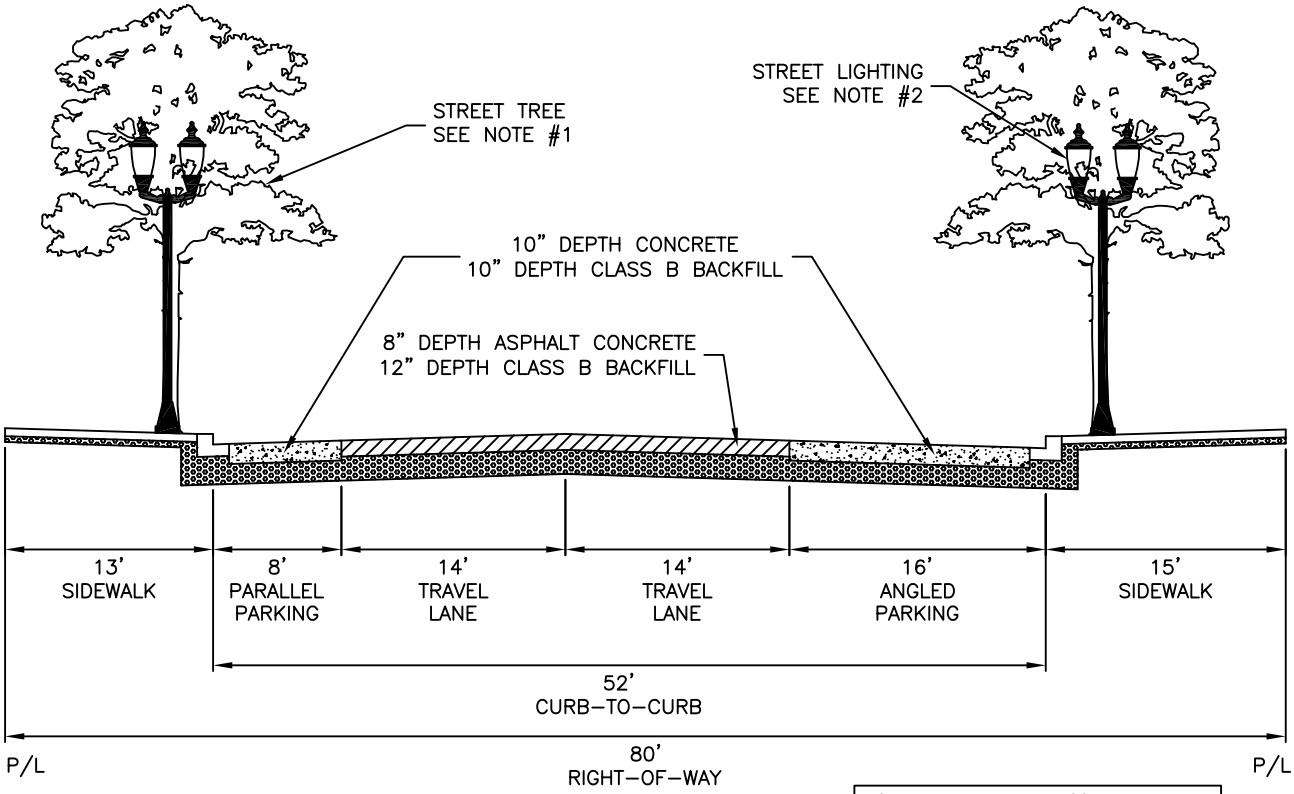

The City is in continual long range planning. These standards represent the best current plans but the City reserves the right to modify the plans.

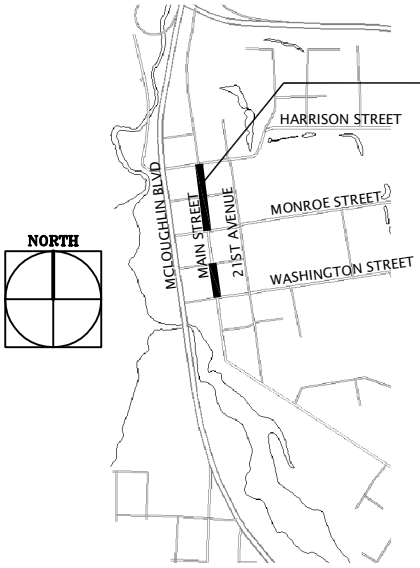

MAIN STREET

- WASHINGTON STREET TO HARRISON STREET (EXCLUDING JEFFERSON STREET TO MONROE STREET.)
- UNDERGROUND ALL UTILITIES.
- FOR STREET FURNITURE, SEE SECTION 3.5 OF DOWNTOWN PLAN.
- FOR BICYCLE FACILITIES, SEE SECTION 3.6 OF DOWNTOWN PLAN.

CONSTRUCTION NOTES

1. STREET TREES SHALL BE ACER RUBRUM 'SUNSET RED MAPLE' WITH A MINIMUM 2" CALIPER AT TIME OF PLANTING.
2. STREET LIGHTING SHALL BE POWDERCOAT BLACK TWIN ORNAMENTAL LIGHTS. ORNAMENTAL LIGHT POLE SHALL BE HADCO P–2065. TWIN ORNAMENTAL LIGHT BRACKET SHALL BE HADCO PTH2520. LIGHT FIXTURE SHALL BE TWO REFRACTIVE GLOBE WITH VICTORIAN ROOF.
3. CONCRETE FOR PARKING AREAS SHALL BE 4000 PSI AT 28 DAYS WITH A SLUMP RANGE OF 2" TO 4".

MILWAUKIE, OREGON · FOUNDED 1847

CITY OF MILWAUKIE, OREGON – PUBLIC WORKS DEPT.

MAIN STREET CROSS SECTION "A"

DRAWING NO. 709

APPROVED Gary Parkin 5/10
CITY ENGINEER DATE

NO.	REVISIONS	DATE	BY
1	NEW DRAWING	10/30/09	ZJW

MAY 2010

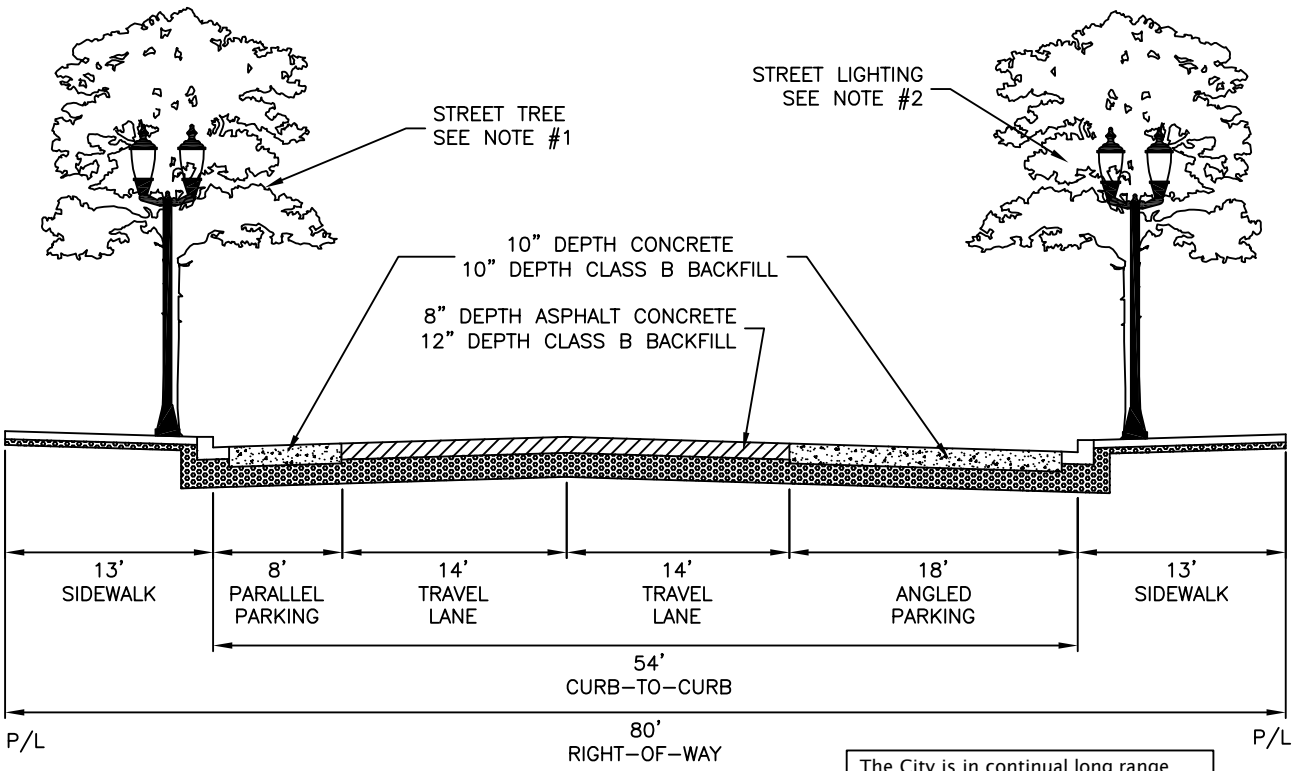

The City is in continual long range planning. These standards represent the best current plans but the City reserves the right to modify the plans.

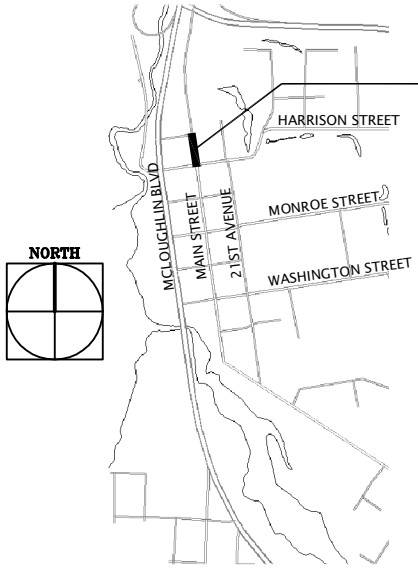

MAIN STREET

- HARRISON STREET TO NORTH MAIN DEVELOPMENT SITE.
- UNDERGROUND ALL UTILITIES.
- FOR STREET FURNITURE, SEE SECTION 3.5 OF DOWNTOWN PLAN.
- FOR BICYCLE FACILITIES, SEE SECTION 3.6 OF DOWNTOWN PLAN.

CONSTRUCTION NOTES

1. STREET TREES SHALL BE ACER RUBRUM 'SUNSET RED MAPLE' WITH A MINIMUM 2" CALIPER AT TIME OF PLANTING.
2. STREET LIGHTING SHALL BE POWDERCOAT BLACK TWIN ORNAMENTAL LIGHTS. ORNAMENTAL LIGHT POLE SHALL BE HADCO P–2065. TWIN ORNAMENTAL LIGHT BRACKET SHALL BE HADCO PTH2520. LIGHT FIXTURE SHALL BE TWO REFRACTIVE GLOBE WITH VICTORIAN ROOF.
3. CONCRETE FOR PARKING AREAS SHALL BE 4000 PSI AT 28 DAYS WITH A SLUMP RANGE OF 2" TO 4".

MILWAUKIE, OREGON · FOUNDED 1847

CITY OF MILWAUKIE, OREGON – PUBLIC WORKS DEPT.

MAIN STREET CROSS SECTION "B"

DRAWING NO. 710

APPROVED Gary Parkin 5/10
CITY ENGINEER DATE

NO.	REVISIONS	DATE	BY
1	NEW DRAWING	10/30/09	ZJW

MAY 2010

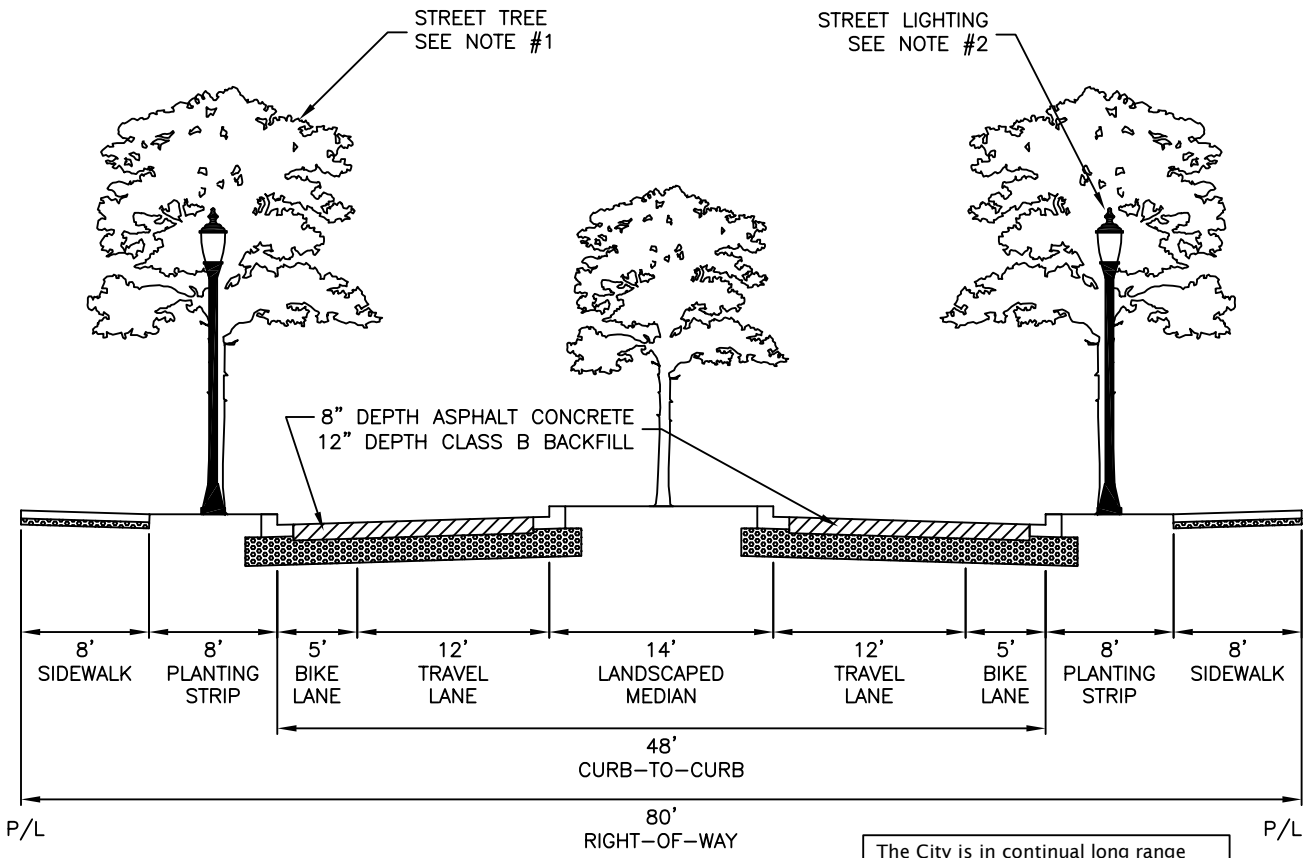

The City is in continual long range planning. These standards represent the best current plans but the City reserves the right to modify the plans.

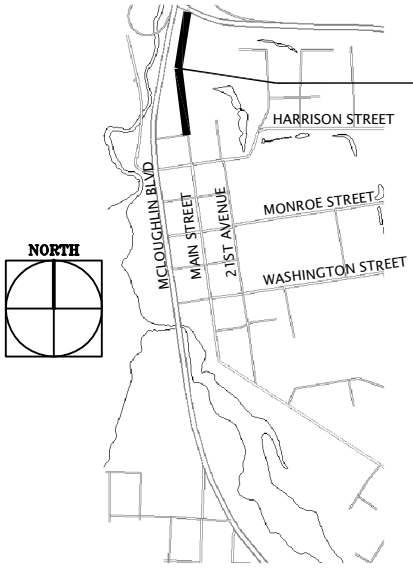

MAIN STREET

- NORTH MAIN DEVELOPMENT SITE TO HIGHWAY 224 OVERPASS.
- UNDERGROUND ALL UTILITIES.
- FOR STREET FURNITURE, SEE SECTION 3.5 OF DOWNTOWN PLAN.
- FOR BICYCLE FACILITIES, SEE SECTION 3.6 OF DOWNTOWN PLAN.

CONSTRUCTION NOTES

1. STREET TREES SHALL BE ACER RUBRUM 'SUNSET RED MAPLE.' STREET TREES WITHIN LANSCAPED MEDIAN SHALL BE CARPINUS BETULUS 'FRANS FONTAINE HORNBEAM.' BOTH TREE TYPES REQUIRE A MINIMUM 2" CALIPER AT TIME OF PLANTING.
2. STREET LIGHTING SHALL BE POWDERCOAT BLACK SINGLE ORNAMENTAL LIGHTS. ORNAMENTAL LIGHT POLE SHALL BE HADCO P–2065. LIGHT FIXTURE SHALL BE REFRACTIVE GLOBE WITH VICTORIAN ROOF.

MILWAUKIE, OREGON · FOUNDED 1847

CITY OF MILWAUKIE, OREGON – PUBLIC WORKS DEPT.

MAIN STREET CROSS SECTION "C"

DRAWING NO. 711

APPROVED Gary Parkin 5/10
CITY ENGINEER DATE

NO.	REVISIONS	DATE	BY
1	NEW DRAWING	10/30/09	ZJW

MAY 2010

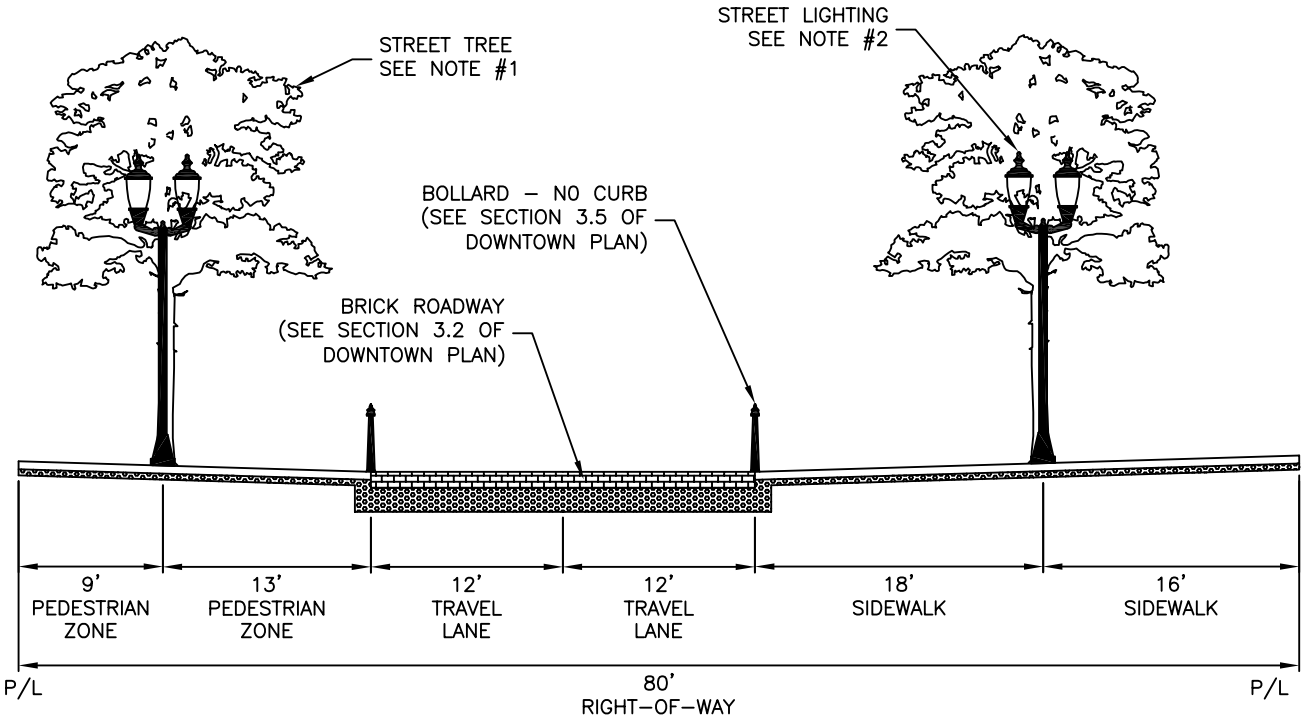

The City is in continual long range planning. These standards represent the best current plans but the City reserves the right to modify the plans.

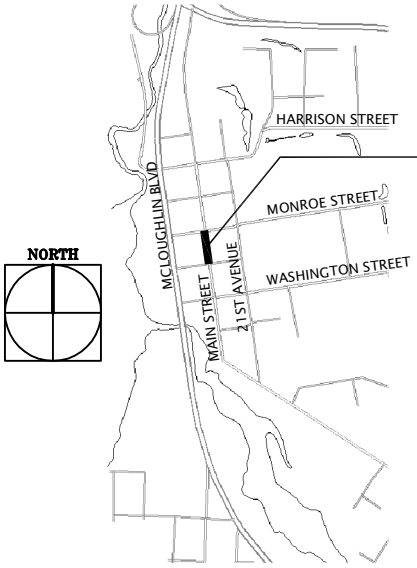

MAIN STREET

- JEFFERSON STREET TO MONROE STREET.
- UNDERGROUND ALL UTILITIES.
- FOR STREET FURNITURE, SEE SECTION 3.5 OF DOWNTOWN PLAN.
- FOR BICYCLE FACILITIES, SEE SECTION 3.6 OF DOWNTOWN PLAN.

CONSTRUCTION NOTES

1. STREET TREES SHALL BE ACER RUBRUM 'SUNSET RED MAPLE' WITH A MINIMUM 2" CALIPER AT TIME OF PLANTING.
2. STREET LIGHTING SHALL BE POWDERCOAT BLACK TWIN ORNAMENTAL LIGHTS. ORNAMENTAL LIGHT POLE SHALL BE HADCO P–2065. TWIN ORNAMENTAL LIGHT BRACKET SHALL BE HADCO PTH2520. LIGHT FIXTURE SHALL BE TWO REFRACTIVE GLOBE WITH VICTORIAN ROOF.

CITY OF MILWAUKIE, OREGON – PUBLIC WORKS DEPT.

MAIN STREET CROSS SECTION "D"

DRAWING NO. 712

APPROVED Gary Parkin 5/10
CITY ENGINEER DATE

NO.	REVISIONS	DATE	BY
1	NEW DRAWING	10/30/09	ZJW

MAY 2010

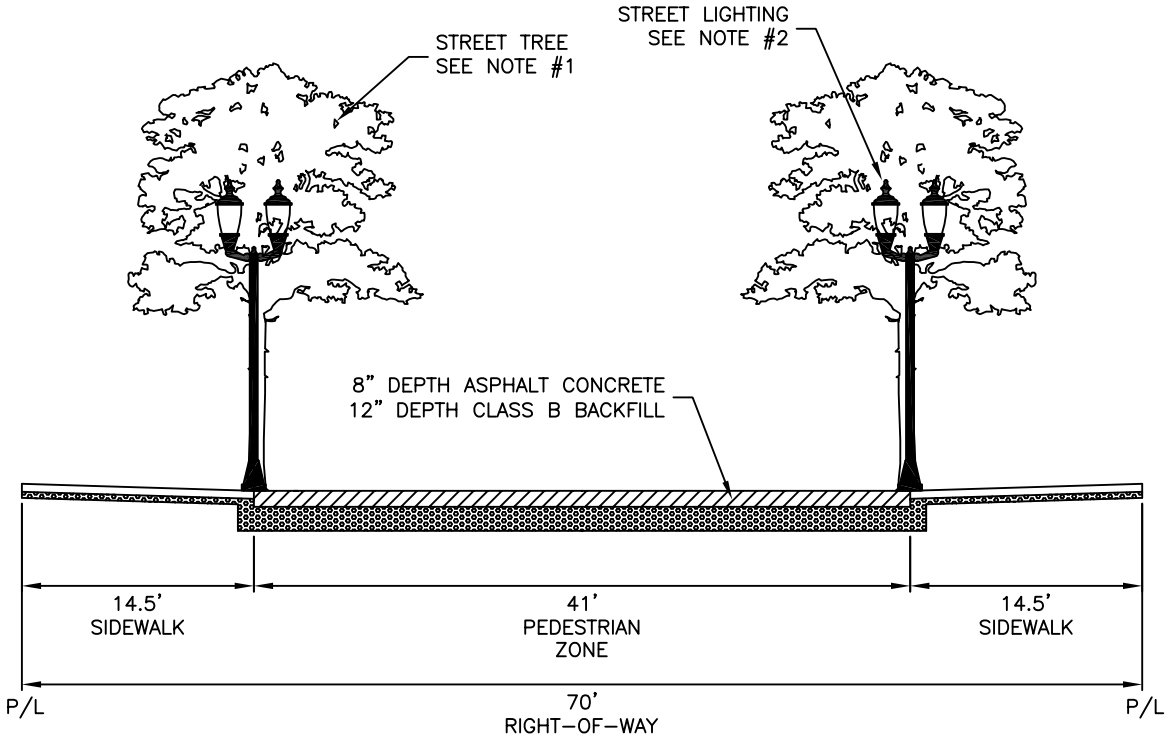

The City is in continual long range planning. These standards represent the best current plans but the City reserves the right to modify the plans.

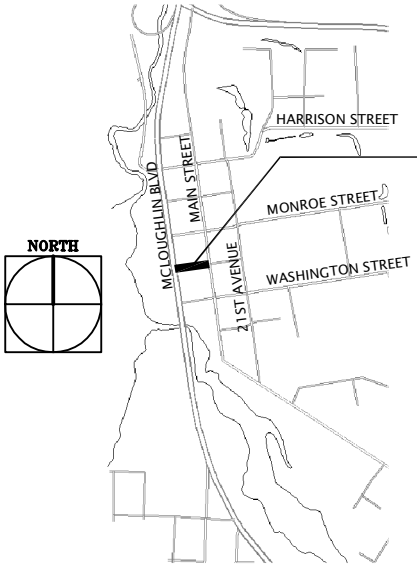

JEFFERSON STREET

- MCLOUGHLIN BOULEVARD TO MAIN STREET.
- NO PARALLEL PARKING ON NORTH SIDE.
- UNDERGROUND ALL UTILITIES.
- FOR STREET FURNITURE, SEE SECTION 3.5 OF DOWNTOWN PLAN.
- FOR BICYCLE FACILITIES, SEE SECTION 3.6 OF DOWNTOWN PLAN.

CONSTRUCTION NOTES

1. STREET TREES SHALL BE EITHER GLEDITSIA TRIACANTHOS 'SKYLINE HONEYLOCUST' OR PYRUS CALLERYANA 'CHANTICLEER PEAR' WITH A MINIMUM 2" CALIPER AT TIME OF PLANTING.
2. STREET LIGHTING SHALL BE POWDERCOAT BLACK TWIN ORNAMENTAL LIGHTS. ORNAMENTAL LIGHT POLE SHALL BE HADCO P-2065. TWIN ORNAMENTAL LIGHT BRACKET SHALL BE HADCO PTH2520. LIGHT FIXTURE SHALL BE TWO REFRACTIVE GLOBE WITH VICTORIAN ROOF.

MILWAUKIE, OREGON · FOUNDED 1847

CITY OF MILWAUKIE, OREGON – PUBLIC WORKS DEPT.

JEFFERSON STREET CROSS SECTION "E"

DRAWING NO. 713

APPROVED Gary Parkin 5/10
CITY ENGINEER DATE

NO.	REVISIONS	DATE	BY
1	NEW DRAWING	10/30/09	ZJW

MAY 2010

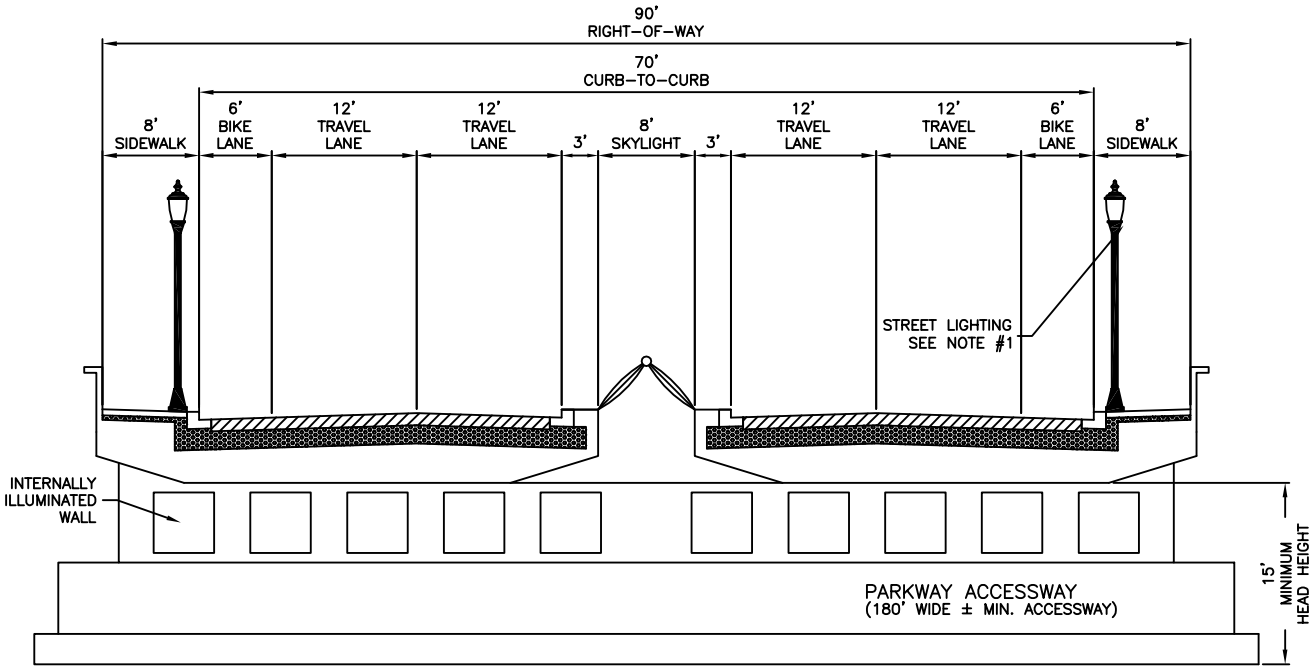

The City is in continual long range planning. These standards represent the best current plans but the City reserves the right to modify the plans.

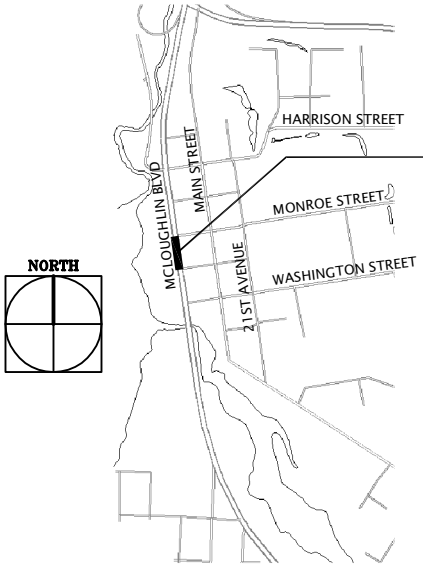

MCLOUGHLIN BOULEVARD

– FINAL DESIGN OF BRIDGE TO BE DETERMINED BY OTHERS.

CONSTRUCTION NOTES

1. STREET LIGHTING SHALL BE POWDERCOAT BLACK SINGLE ORNAMENTAL LIGHTS. ORNAMENTAL LIGHT POLE SHALL BE HADCO P-2065. LIGHT FIXTURE SHALL BE REFRACTIVE GLOBE WITH VICTORIAN ROOF.

CITY OF MILWAUKIE, OREGON – PUBLIC WORKS DEPT.

MILWAUKIE, OREGON FOUNDED 1847

MCLOUGHLIN BOULEVARD CROSS SECTION "F"

DRAWING NO. 714

APPROVED Gary Parkin 5/10

CITY ENGINEER DATE

NO.	REVISIONS	DATE	BY
1	NEW DRAWING	10/30/09	ZJW

MAY 2010

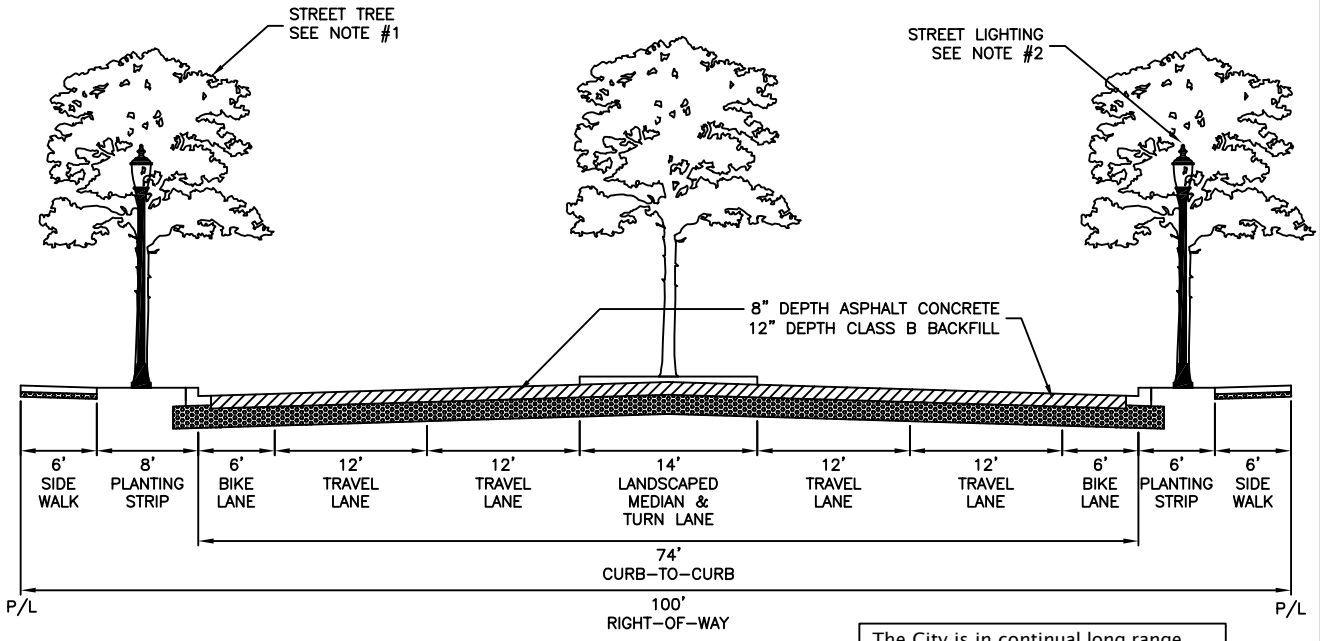

The City is in continual long range planning. These standards represent the best current plans but the City reserves the right to modify the plans.

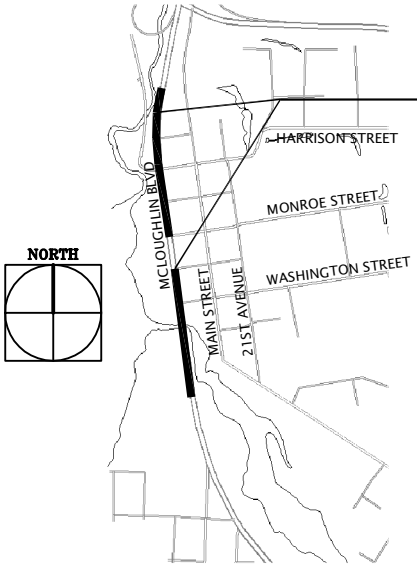

MCLOUGHLIN BOULEVARD

- NEW STREET TO MONROE STREET; JEFFERSON STREET TO RAILROAD TRESTLE.
- UNDERGROUND ALL UTILITIES.
- FOR STREET FURNITURE, SEE SECTION 3.5 OF DOWNTOWN PLAN.
- FOR BICYCLE FACILITIES, SEE SECTION 3.6 OF DOWNTOWN PLAN.

CONSTRUCTION NOTES

1. STREET TREES SHALL BE ACER RUBRUM 'SUNSET RED MAPLE.' STREET TREES WITHIN LANSCAPED MEDIAN SHALL BE CARPINUS BETULUS 'FRANS FONTAINE HORNBEAM.' BOTH TREE TYPES REQUIRE A MINIMUM 2" CALIPER AT TIME OF PLANTING.
2. STREET LIGHTING SHALL BE POWDERCOAT BLACK TWIN ORNAMENTAL LIGHTS. ORNAMENTAL LIGHT POLE SHALL BE HADCO P-2065. TWIN ORNAMENTAL LIGHT BRACKET SHALL BE HADCO PTH2520. LIGHT FIXTURE SHALL BE TWO REFRACTIVE GLOBE WITH VICTORIAN ROOF.

MILWAUKIE, OREGON · FOUNDED 1847

CITY OF MILWAUKIE, OREGON – PUBLIC WORKS DEPT.

MCLOUGHLIN BOULEVARD CROSS SECTION "G"

DRAWING NO. 715

APPROVED Gary Parkin 5/10

CITY ENGINEER DATE

NO.	REVISIONS	DATE	BY
1	NEW DRAWING	10/30/09	ZJW

MAY 2010

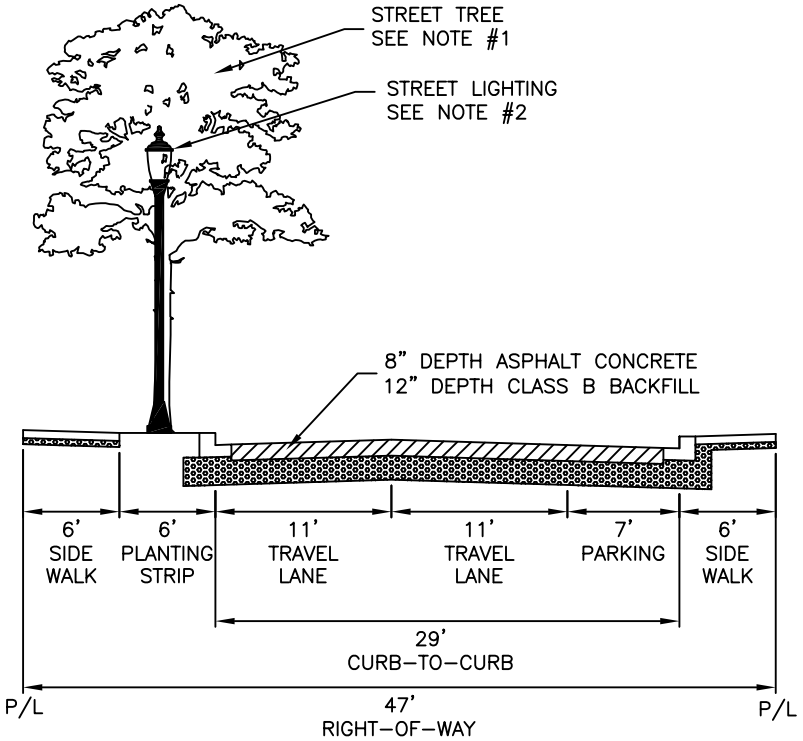

The City is in continual long range planning. These standards represent the best current plans but the City reserves the right to modify the plans.

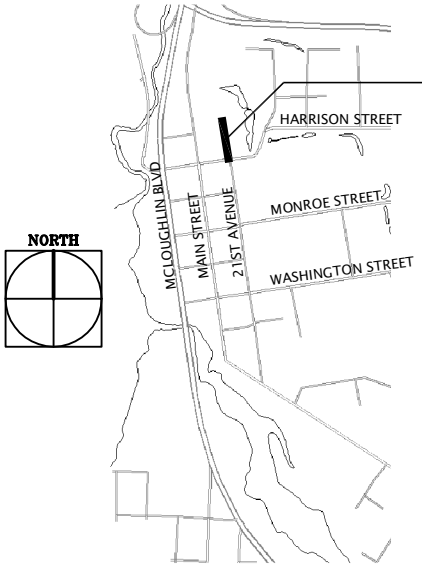

21ST AVENUE EXTENSION

- EXTENDS 21ST AVENUE, FROM HARRISON STREET TO LIBRARY PARKING LOT.
- UNDERGROUND ALL UTILITIES.
- FOR STREET FURNITURE, SEE SECTION 3.5 OF DOWNTOWN PLAN.
- FOR BICYCLE FACILITIES, SEE SECTION 3.6 OF DOWNTOWN PLAN.

CONSTRUCTION NOTES

1. STREET TREES SHALL BE ACER RUBRUM 'SUNSET RED MAPLE' WITH A MINIMUM 2" CALIPER AT TIME OF PLANTING.
2. STREET LIGHTING SHALL BE POWDERCOAT BLACK SINGLE ORNAMENTAL LIGHTS. ORNAMENTAL LIGHT POLE SHALL BE HADCO P–2065. LIGHT FIXTURE SHALL BE REFRACTIVE GLOBE WITH VICTORIAN ROOF.

MILWAUKIE, OREGON · FOUNDED 1847

CITY OF MILWAUKIE, OREGON – PUBLIC WORKS DEPT.

21ST AVENUE CROSS SECTION "H(1)"

DRAWING NO. 716A

APPROVED Gary Parkin 5/10
CITY ENGINEER DATE

NO.	REVISIONS	DATE	BY
1	NEW DRAWING	10/30/09	ZJW

MAY 2010

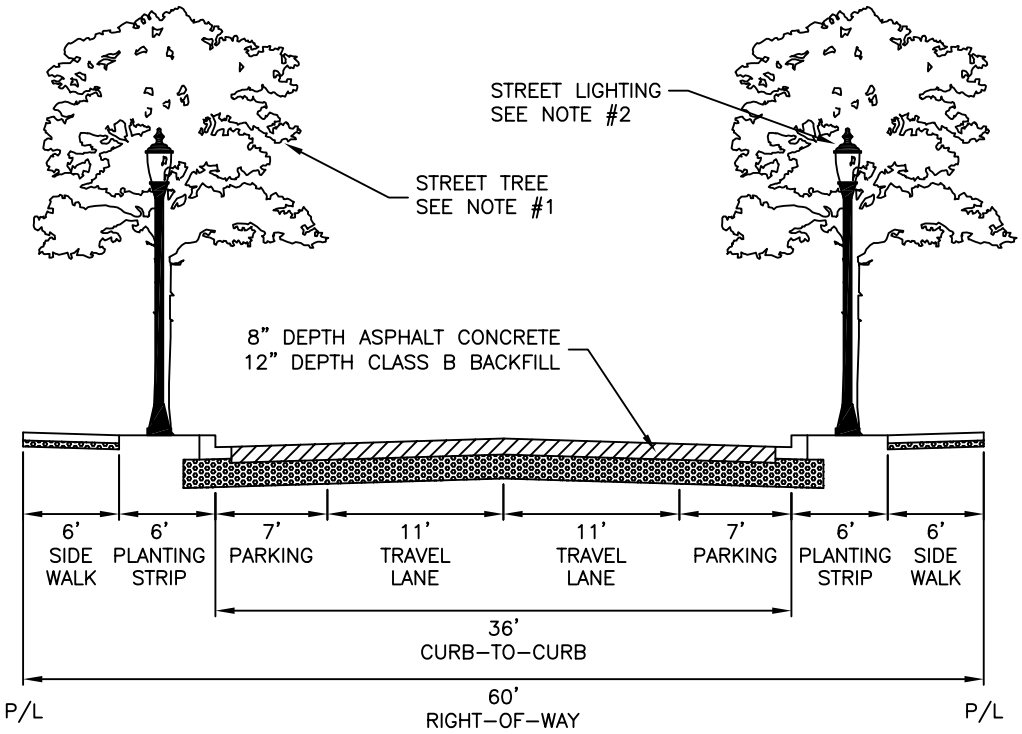

The City is in continual long range planning. These standards represent the best current plans but the City reserves the right to modify the plans.

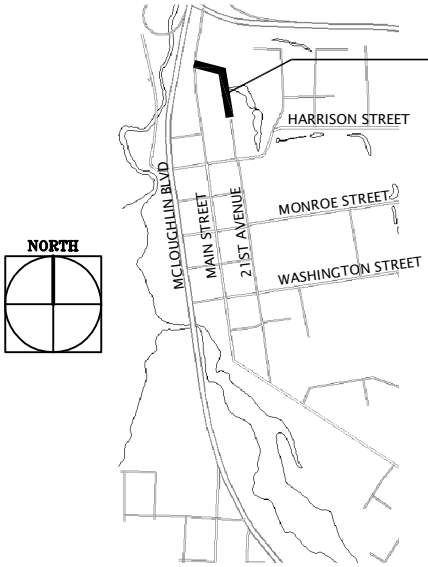

21ST AVENUE EXTENSION – NORTH SECTION

- FURTHER EXTENDS 21ST AVENUE, FROM SCOTT PARK TO MAIN STREET.
- UNDERGROUND ALL UTILITIES.
- FOR STREET FURNITURE, SEE SECTION 3.5 OF DOWNTOWN PLAN.
- FOR BICYCLE FACILITIES, SEE SECTION 3.6 OF DOWNTOWN PLAN.

CONSTRUCTION NOTES

1. STREET TREES:

   NORTH–SOUTH SEGMENT: STREET TREES SHALL BE ACER RUBRUM 'SUNSET RED MAPLE' WITH A MINIMUM 2" CALIPER AT TIME OF PLANTING.

   EAST–WEST SEGMENT: STREET TREES SHALL BE EITHER GLEDITSIA TRIACANTHOS 'SKYLINE HONEYLOCUST' OR PYRUS CALLERYANA 'CHANTICLEER PEAR' WITH A MINIMUM 2" CALIPER AT TIME OF PLANTING.

2. STREET LIGHTING SHALL BE POWDERCOAT BLACK SINGLE ORNAMENTAL LIGHTS. ORNAMENTAL LIGHT POLE SHALL BE HADCO P–2065. LIGHT FIXTURE SHALL BE REFRACTIVE GLOBE WITH VICTORIAN ROOF.

MILWAUKIE, OREGON · FOUNDED 1847

CITY OF MILWAUKIE, OREGON – PUBLIC WORKS DEPT.

21ST AVENUE CROSS SECTION "H(2)"

DRAWING NO. 716B

APPROVED Gary Parkin 5/10
CITY ENGINEER DATE

NO.	REVISIONS	DATE	BY
1	NEW DRAWING	10/30/09	ZJW

MAY 2010

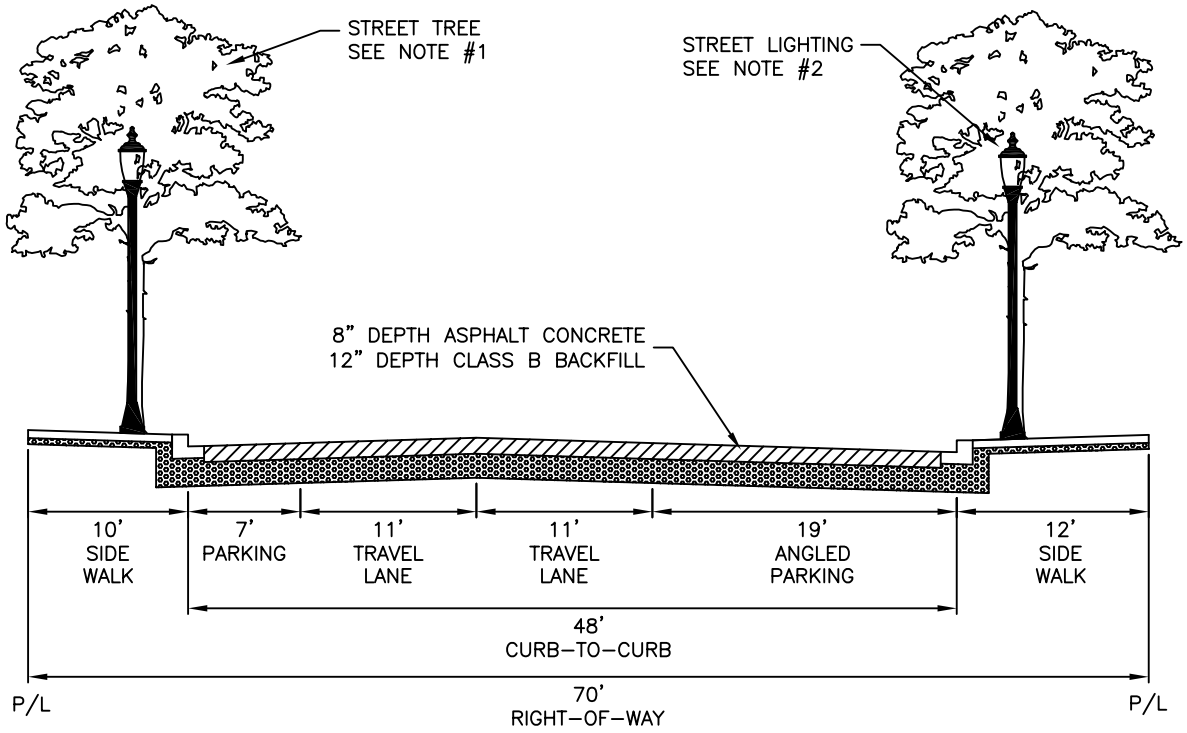

The City is in continual long range planning. These standards represent the best current plans but the City reserves the right to modify the plans.

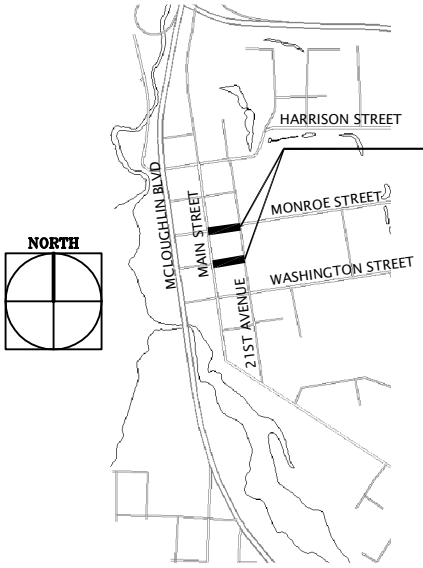

MONROE AND JEFFERSON STREETS

- MAIN STREET TO 21ST AVENUE.
- UNDERGROUND ALL UTILITIES.
- FOR STREET FURNITURE, SEE SECTION 3.5 OF DOWNTOWN PLAN.
- FOR BICYCLE FACILITIES, SEE SECTION 3.6 OF DOWNTOWN PLAN.

CONSTRUCTION NOTES

1. STREET TREES SHALL BE EITHER GLEDITSIA TRIACANTHOS 'SKYLINE HONEYLOCUST' OR PYRUS CALLERYANA 'CHANTICLEER PEAR' WITH A MINIMUM 2" CALIPER AT TIME OF PLANTING.
2. STREET LIGHTING SHALL BE POWDERCOAT BLACK SINGLE ORNAMENTAL LIGHTS. ORNAMENTAL LIGHT POLE SHALL BE HADCO P-2065. LIGHT FIXTURE SHALL BE REFRACTIVE GLOBE WITH VICTORIAN ROOF.

MILWAUKIE, OREGON FOUNDED 1847

CITY OF MILWAUKIE, OREGON – PUBLIC WORKS DEPT.

MONROE & JEFFERSON STREET CROSS SECTION "I"

DRAWING NO. 717

APPROVED Gary Parkin 5/10
CITY ENGINEER DATE

NO.	REVISIONS	DATE	BY
1	NEW DRAWING	10/30/09	ZJW

MAY 2010

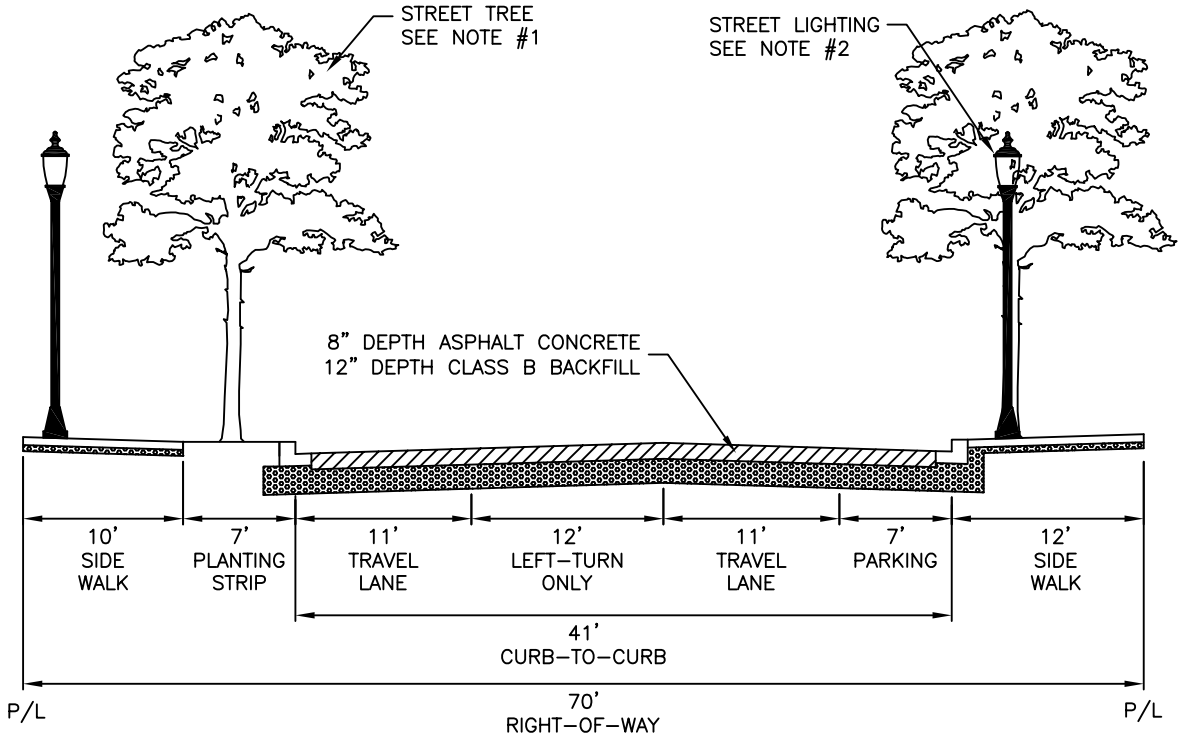

The City is in continual long range planning. These standards represent the best current plans but the City reserves the right to modify the plans.

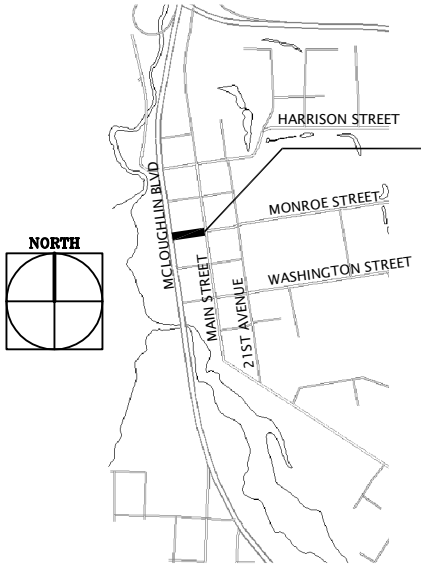

MONROE STREET

- MCLOUGHLIN BOULEVARD TO MAIN STREET.
- UNDERGROUND ALL UTILITIES.
- FOR STREET FURNITURE, SEE SECTION 3.5 OF DOWNTOWN PLAN.
- FOR BICYCLE FACILITIES, SEE SECTION 3.6 OF DOWNTOWN PLAN.

CONSTRUCTION NOTES

1. STREET TREES SHALL BE EITHER GLEDITSIA TRIACANTHOS 'SKYLINE HONEYLOCUST' OR PYRUS CALLERYANA 'CHANTICLEER PEAR' WITH A MINIMUM 2" CALIPER AT TIME OF PLANTING.
2. STREET LIGHTING SHALL BE POWDERCOAT BLACK SINGLE ORNAMENTAL LIGHTS. ORNAMENTAL LIGHT POLE SHALL BE HADCO P-2065. LIGHT FIXTURE SHALL BE REFRACTIVE GLOBE WITH VICTORIAN ROOF.

MILWAUKIE, OREGON FOUNDED 1847

CITY OF MILWAUKIE, OREGON – PUBLIC WORKS DEPT.

MONROE STREET CROSS SECTION "J"

DRAWING NO. 718

APPROVED Gary Parkin 5/10
CITY ENGINEER DATE

NO.	REVISIONS	DATE	BY
1	NEW DRAWING	10/30/09	ZJW

MAY 2010

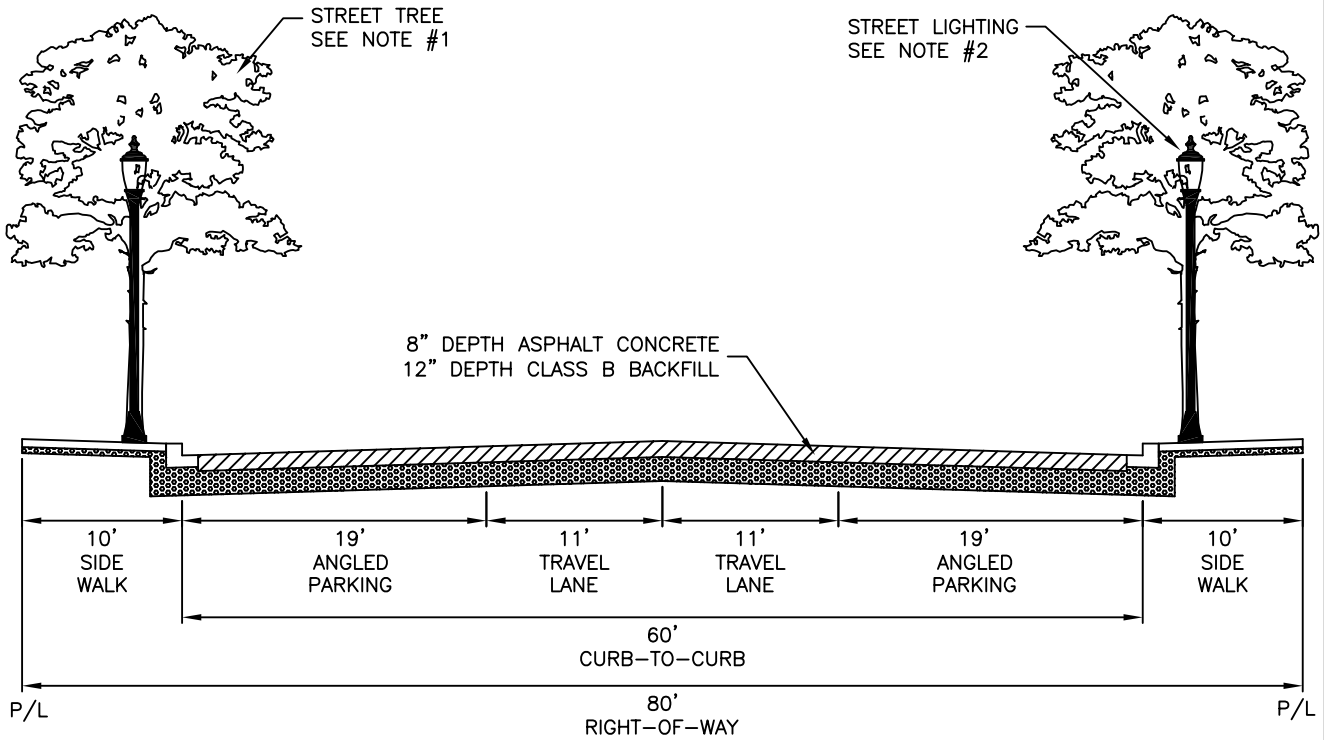

The City is in continual long range planning. These standards represent the best current plans but the City reserves the right to modify the plans.

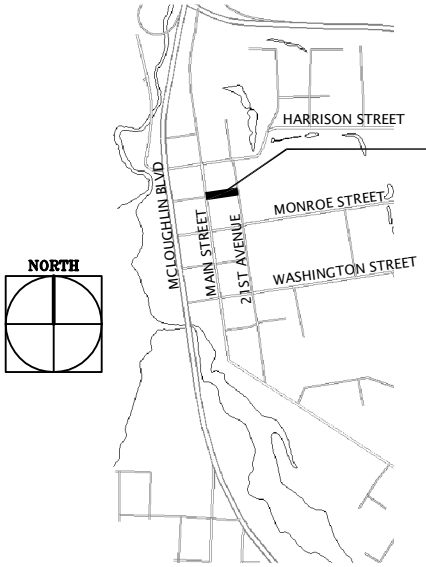

JACKSON STREET

- 21ST AVENUE TO MAIN STREET.
- UNDERGROUND ALL UTILITIES.
- FOR STREET FURNITURE, SEE SECTION 3.5 OF DOWNTOWN PLAN.
- FOR BICYCLE FACILITIES, SEE SECTION 3.6 OF DOWNTOWN PLAN.

CONSTRUCTION NOTES

1. STREET TREES SHALL BE EITHER GLEDITSIA TRIACANTHOS 'SKYLINE HONEYLOCUST' OR PYRUS CALLERYANA 'CHANTICLEER PEAR' WITH A MINIMUM 2" CALIPER AT TIME OF PLANTING.
2. STREET LIGHTING SHALL BE POWDERCOAT BLACK SINGLE ORNAMENTAL LIGHTS. ORNAMENTAL LIGHT POLE SHALL BE HADCO P-2065. LIGHT FIXTURE SHALL BE REFRACTIVE GLOBE WITH VICTORIAN ROOF.

MILWAUKIE, OREGON FOUNDED 1847

CITY OF MILWAUKIE, OREGON – PUBLIC WORKS DEPT.

JACKSON STREET CROSS SECTION "K"

DRAWING NO. 719

APPROVED Gary Parkin 5/10
CITY ENGINEER DATE

NO.	REVISIONS	DATE	BY
1	NEW DRAWING	10/30/09	ZJW

MAY 2010

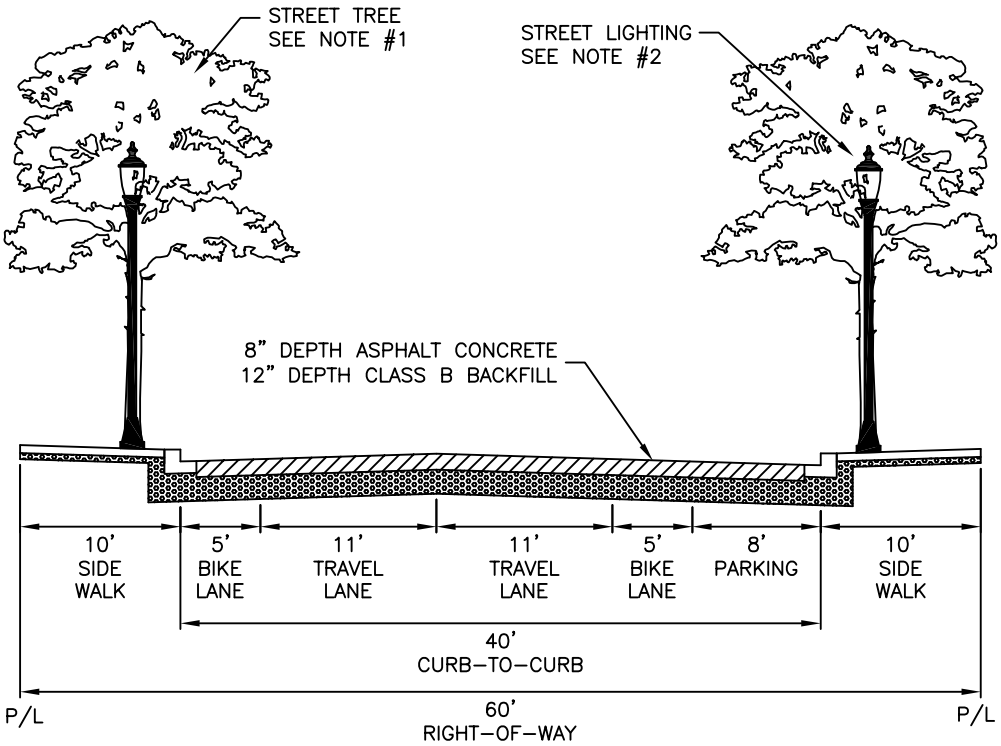

The City is in continual long range planning. These standards represent the best current plans but the City reserves the right to modify the plans.

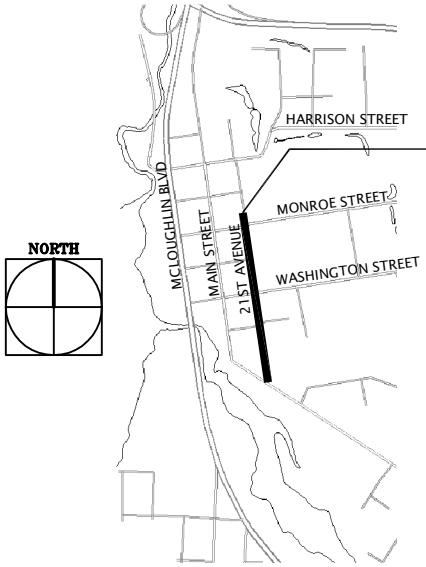

21ST AVENUE

- FROM MONROE STREET TO LAKE ROAD.
- UNDERGROUND ALL UTILITIES.
- FOR STREET FURNITURE, SEE SECTION 3.5 OF DOWNTOWN PLAN.
- FOR BICYCLE FACILITIES, SEE SECTION 3.6 OF DOWNTOWN PLAN.

CONSTRUCTION NOTES

1. STREET TREES SHALL BE ACER RUBRUM 'SUNSET RED MAPLE' WITH A MINIMUM 2" CALIPER AT TIME OF PLANTING.
2. STREET LIGHTING SHALL BE POWDERCOAT BLACK SINGLE ORNAMENTAL LIGHTS. ORNAMENTAL LIGHT POLE SHALL BE HADCO P-2065. LIGHT FIXTURE SHALL BE REFRACTIVE GLOBE WITH VICTORIAN ROOF.

MILWAUKIE, OREGON · FOUNDED 1847

CITY OF MILWAUKIE, OREGON – PUBLIC WORKS DEPT.

21ST AVENUE CROSS SECTION "L"

DRAWING NO. 720

APPROVED Gary Parkin 5/10
CITY ENGINEER DATE

NO.	REVISIONS	DATE	BY
1	NEW DRAWING	10/30/09	ZJW

MAY 2010

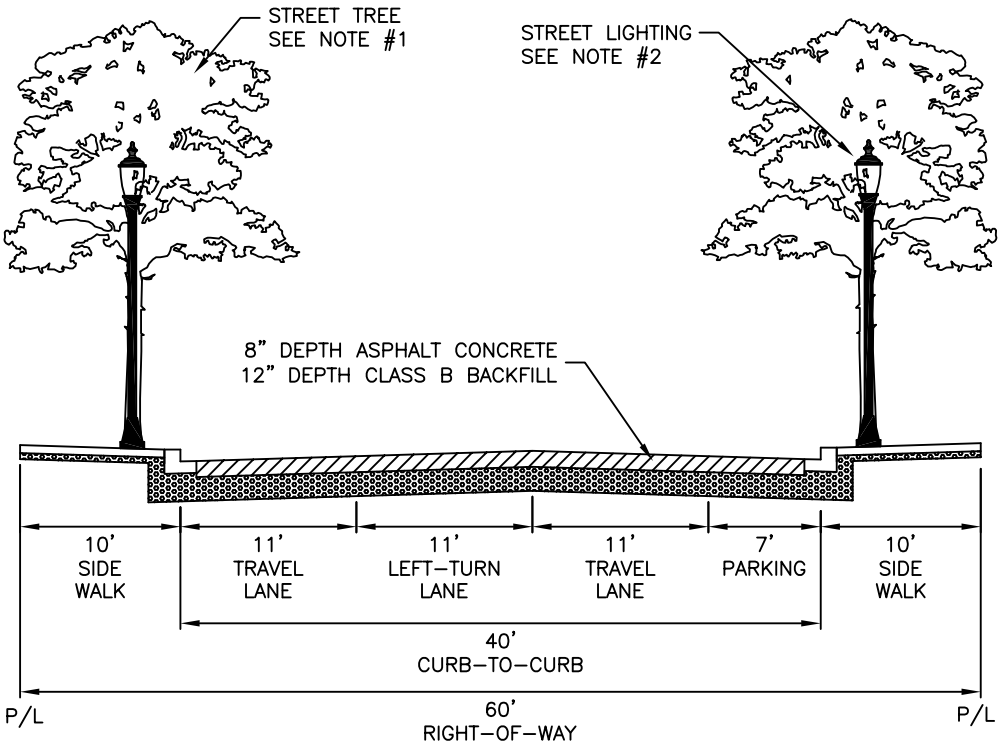

The City is in continual long range planning. These standards represent the best current plans but the City reserves the right to modify the plans.

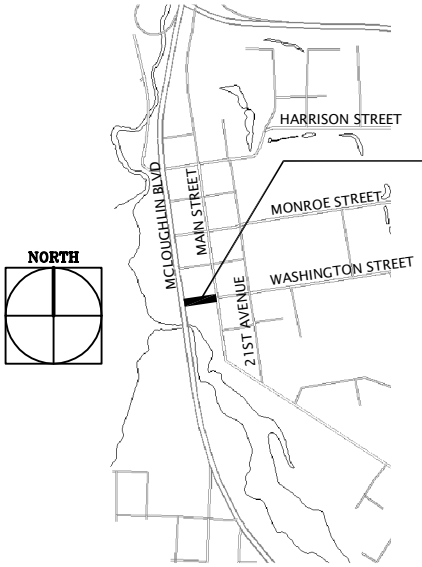

WASHINGTON STREET

- MAIN STREET TO MCLOUGHLIN BOULEVARD.
- UNDERGROUND ALL UTILITIES.
- FOR STREET FURNITURE, SEE SECTION 3.5 OF DOWNTOWN PLAN.
- FOR BICYCLE FACILITIES, SEE SECTION 3.6 OF DOWNTOWN PLAN.

CONSTRUCTION NOTES

1. STREET TREES SHALL BE EITHER GLEDITSIA TRIACANTHOS 'SKYLINE HONEYLOCUST' OR PYRUS CALLERYANA 'CHANTICLEER PEAR' WITH A MINIMUM 2" CALIPER AT TIME OF PLANTING.
2. STREET LIGHTING SHALL BE POWDERCOAT BLACK SINGLE ORNAMENTAL LIGHTS. ORNAMENTAL LIGHT POLE SHALL BE HADCO P-2065. LIGHT FIXTURE SHALL BE REFRACTIVE GLOBE WITH VICTORIAN ROOF.

CITY OF MILWAUKIE, OREGON – PUBLIC WORKS DEPT.

WASHINGTON STREET CROSS SECTION "M"

DRAWING NO. 721

APPROVED Gary Parkin 5/10
CITY ENGINEER DATE

NO.	REVISIONS	DATE	BY
1	NEW DRAWING	10/30/09	ZJW

MAY 2010

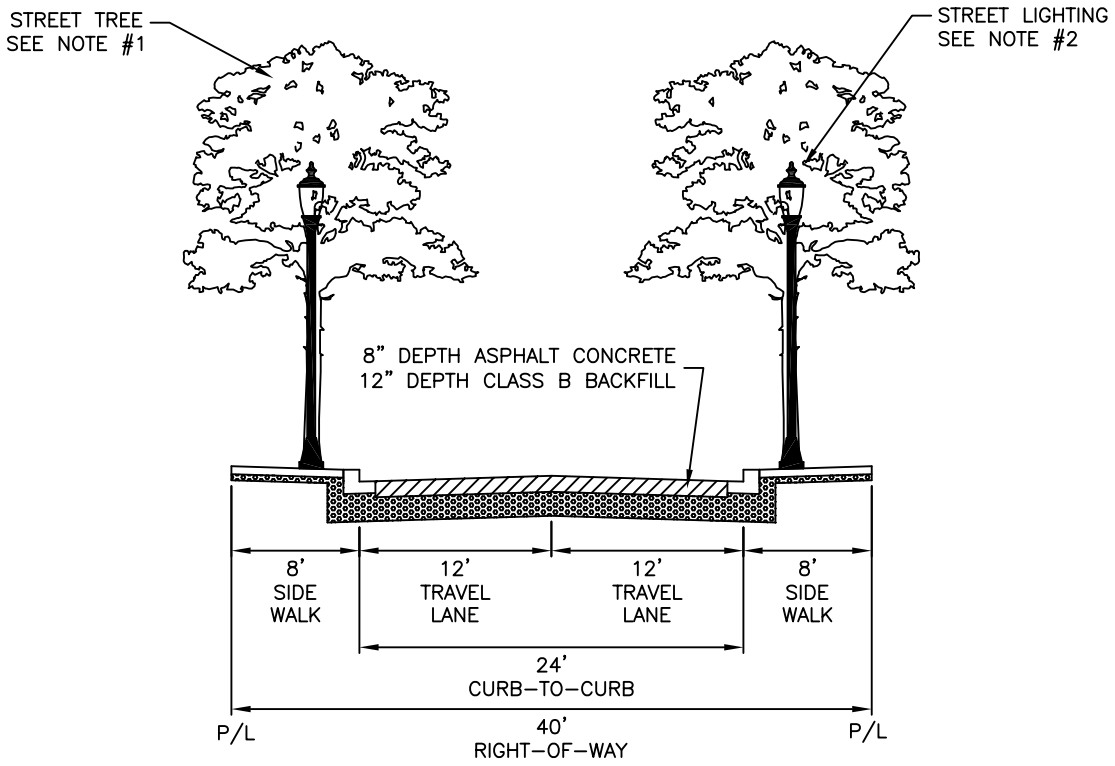

The City is in continual long range planning. These standards represent the best current plans but the City reserves the right to modify the plans.

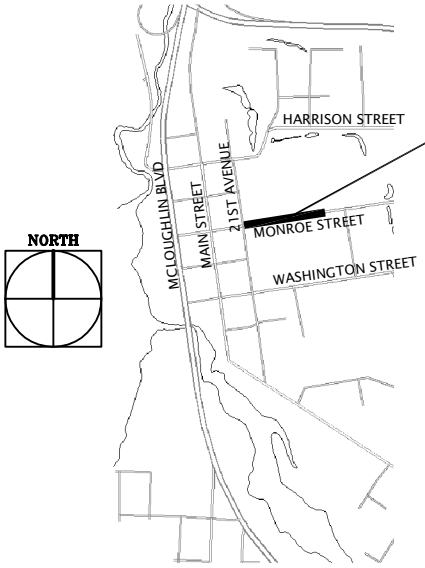

MONROE STREET

- EAST OF 21ST AVENUE.
- UNDERGROUND ALL UTILITIES.
- FOR STREET FURNITURE, SEE SECTION 3.5 OF DOWNTOWN PLAN.
- FOR BICYCLE FACILITIES, SEE SECTION 3.6 OF DOWNTOWN PLAN.

CONSTRUCTION NOTES

1. STREET TREES SHALL BE EITHER GLEDITSIA TRIACANTHOS 'SKYLINE HONEYLOCUST' OR PYRUS CALLERYANA 'CHANTICLEER PEAR' WITH A MINIMUM 2" CALIPER AT TIME OF PLANTING.
2. STREET LIGHTING SHALL BE POWDERCOAT BLACK SINGLE ORNAMENTAL LIGHTS. ORNAMENTAL LIGHT POLE SHALL BE HADCO P-2065. LIGHT FIXTURE SHALL BE REFRACTIVE GLOBE WITH VICTORIAN ROOF.

MILWAUKIE, OREGON FOUNDED 1847

CITY OF MILWAUKIE, OREGON – PUBLIC WORKS DEPT.

MONROE STREET CROSS SECTION "N"

DRAWING NO. 722

APPROVED Gary Parkin 5/10
CITY ENGINEER DATE

NO.	REVISIONS	DATE	BY
1	NEW DRAWING	10/30/09	ZJW

MAY 2010

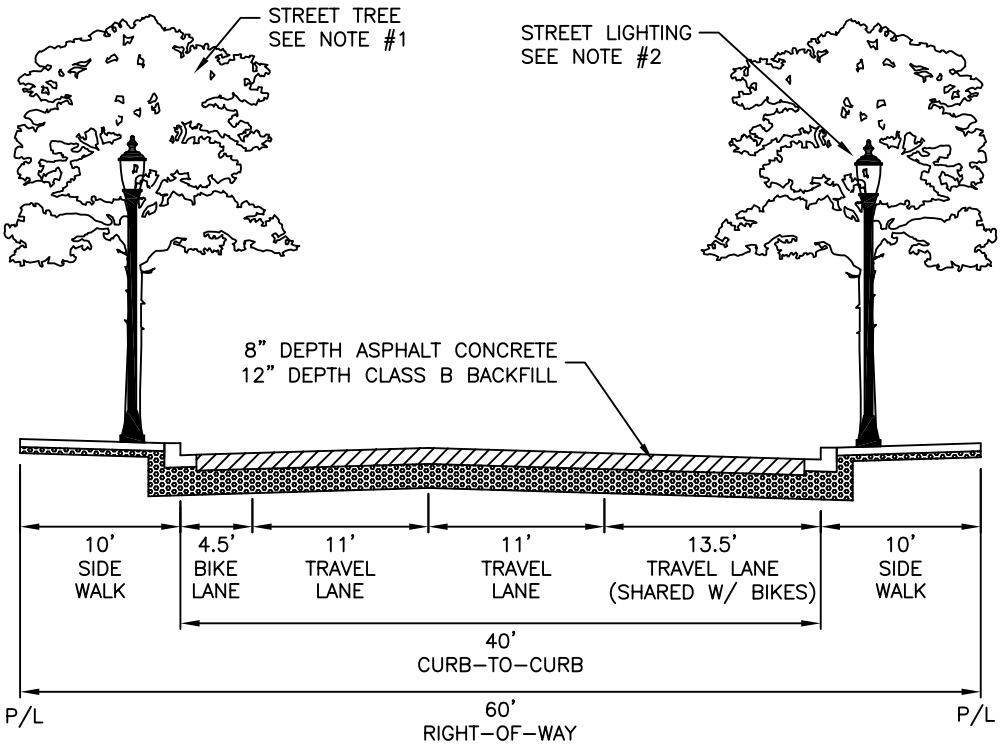

The City is in continual long range planning. These standards represent the best current plans but the City reserves the right to modify the plans.

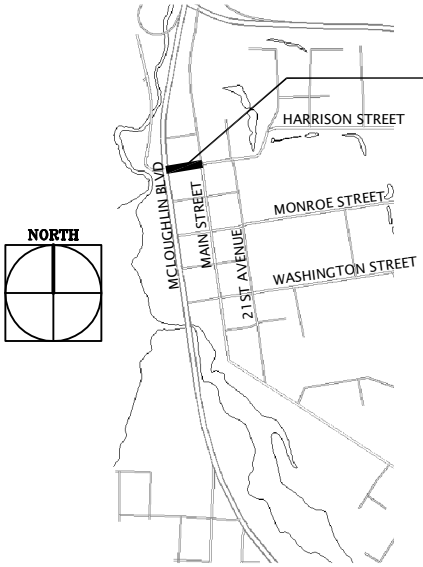

HARRISON STREET

- FROM MCLOUGHLIN BOULEVARD TO MAIN STREET.
- UNDERGROUND ALL UTILITIES.
- SECTION CONDITION AT WEST END OF BLOCK ONLY.
- FOR STREET FURNITURE, SEE SECTION 3.5 OF DOWNTOWN PLAN.
- FOR BICYCLE FACILITIES, SEE SECTION 3.6 OF DOWNTOWN PLAN.

CONSTRUCTION NOTES

1. STREET TREES SHALL BE EITHER GLEDITSIA TRIACANTHOS 'SKYLINE HONEYLOCUST' OR PYRUS CALLERYANA 'CHANTICLEER PEAR' WITH A MINIMUM 2" CALIPER AT TIME OF PLANTING.
2. STREET LIGHTING SHALL BE POWDERCOAT BLACK SINGLE ORNAMENTAL LIGHTS. ORNAMENTAL LIGHT POLE SHALL BE HADCO P-2065. LIGHT FIXTURE SHALL BE REFRACTIVE GLOBE WITH VICTORIAN ROOF.

MILWAUKIE, OREGON · FOUNDED 1847

CITY OF MILWAUKIE, OREGON – PUBLIC WORKS DEPT.

HARRISON STREET CROSS SECTION "O"

DRAWING NO. 723

APPROVED Gary Parkin 5/10
CITY ENGINEER DATE

NO.	REVISIONS	DATE	BY
1	NEW DRAWING	10/30/09	ZJW

MAY 2010

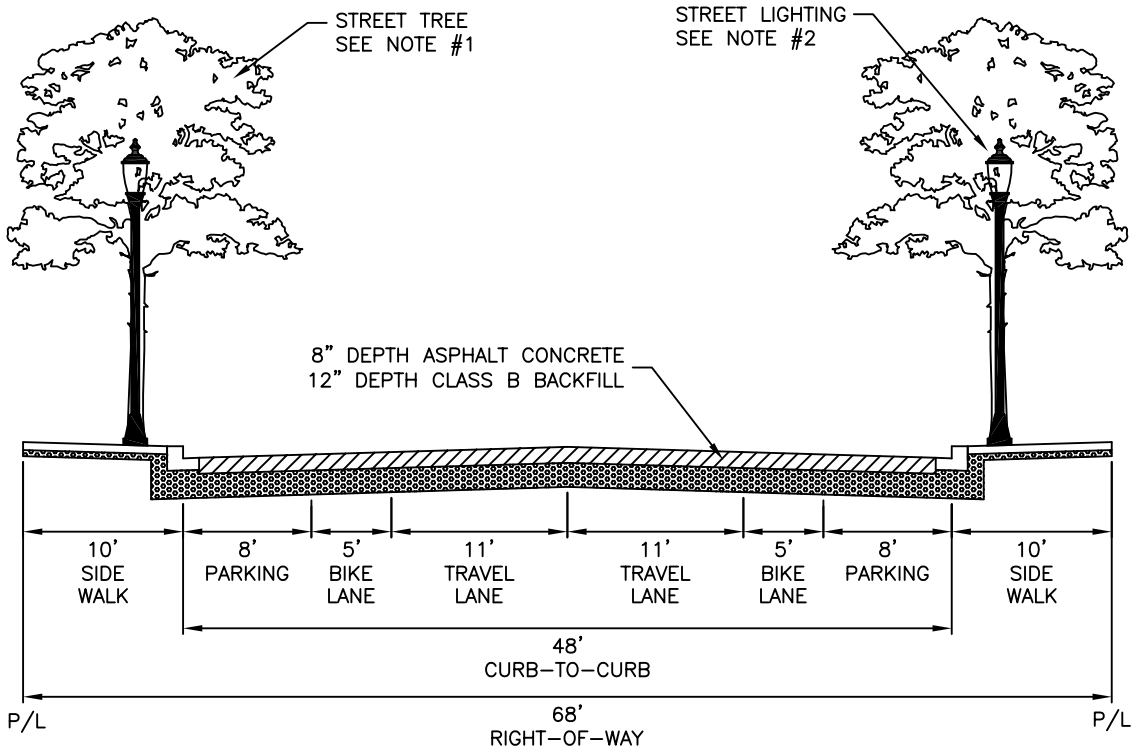

The City is in continual long range planning. These standards represent the best current plans but the City reserves the right to modify the plans.

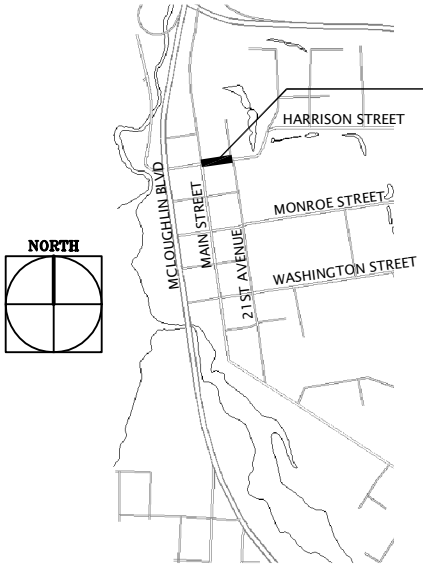

HARRISON STREET

- FROM MAIN STREET TO 21ST AVENUE.
- UNDERGROUND ALL UTILITIES.
- FOR STREET FURNITURE, SEE SECTION 3.5 OF DOWNTOWN PLAN.
- FOR BICYCLE FACILITIES, SEE SECTION 3.6 OF DOWNTOWN PLAN.

CONSTRUCTION NOTES

1. STREET TREES SHALL BE ACER RUBRUM 'SUNSET RED MAPLE' WITH A MINIMUM 2" CALIPER AT TIME OF PLANTING.
2. STREET LIGHTING SHALL BE POWDERCOAT BLACK SINGLE ORNAMENTAL LIGHTS. ORNAMENTAL LIGHT POLE SHALL BE HADCO P-2065. LIGHT FIXTURE SHALL BE REFRACTIVE GLOBE WITH VICTORIAN ROOF.

MILWAUKIE, OREGON · FOUNDED 1847

CITY OF MILWAUKIE, OREGON – PUBLIC WORKS DEPT.

HARRISON STREET CROSS SECTION "P"

DRAWING NO. 724

APPROVED Gary Parkin 5/10
CITY ENGINEER DATE

NO.	REVISIONS	DATE	BY
1	NEW DRAWING	10/30/09	ZJW

MAY 2010

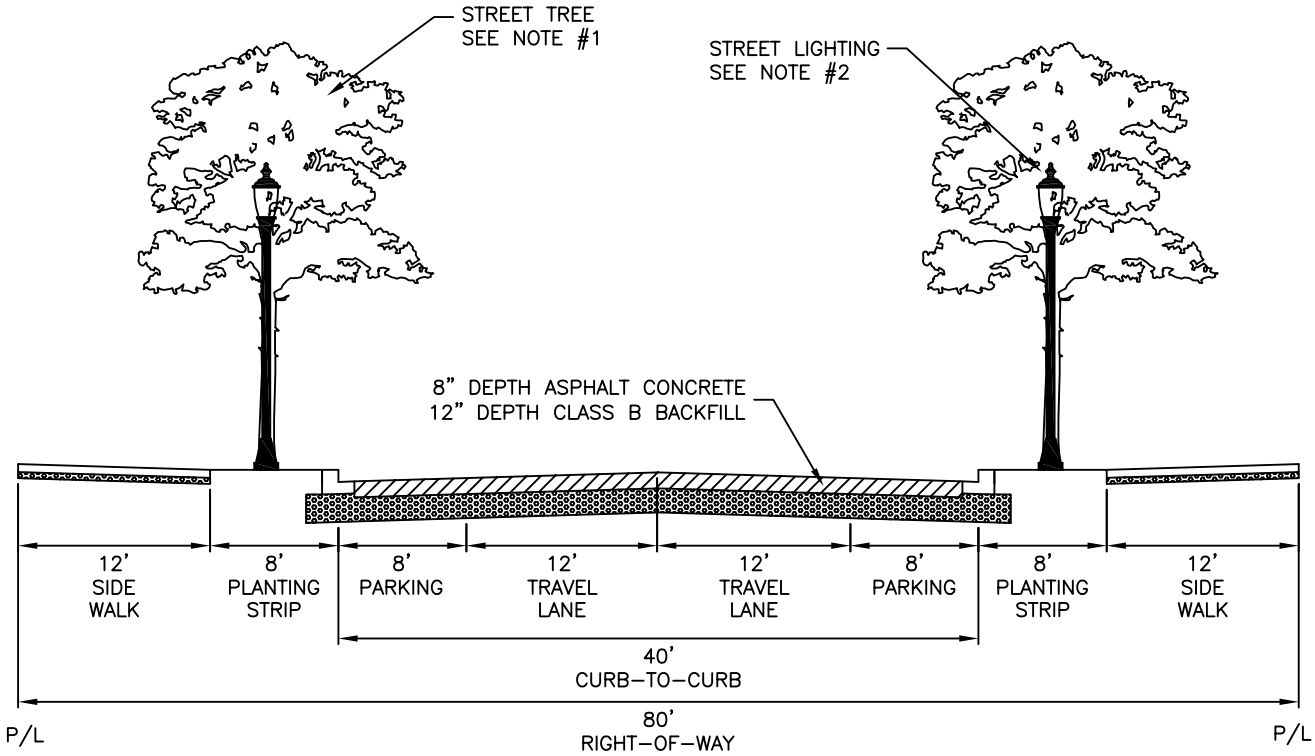

The City is in continual long range planning. These standards represent the best current plans but the City reserves the right to modify the plans.

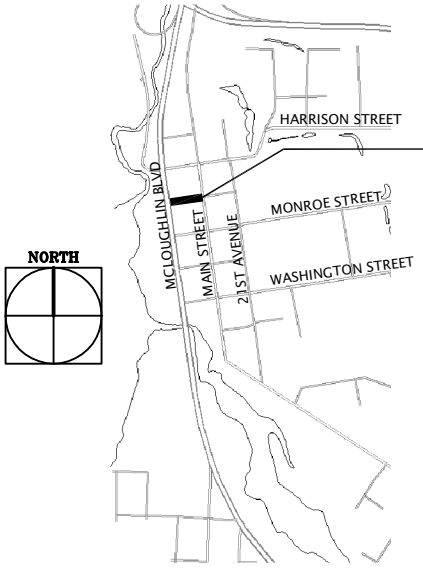

JACKSON STREET

- FROM MAIN STREET TO MCLOUGHLIN BOULEVARD.
- UNDERGROUND ALL UTILITIES.
- FOR STREET FURNITURE, SEE SECTION 3.5 OF DOWNTOWN PLAN.
- FOR BICYCLE FACILITIES, SEE SECTION 3.6 OF DOWNTOWN PLAN.

CONSTRUCTION NOTES

1. STREET TREES SHALL BE EITHER GLEDITSIA TRIACANTHOS 'SKYLINE HONEYLOCUST' OR PYRUS CALLERYANA 'CHANTICLEER PEAR' WITH A MINIMUM 2" CALIPER AT TIME OF PLANTING.
2. STREET LIGHTING SHALL BE POWDERCOAT BLACK SINGLE ORNAMENTAL LIGHTS. ORNAMENTAL LIGHT POLE SHALL BE HADCO P-2065. LIGHT FIXTURE SHALL BE REFRACTIVE GLOBE WITH VICTORIAN ROOF.

MILWAUKIE, OREGON · FOUNDED 1847

CITY OF MILWAUKIE, OREGON – PUBLIC WORKS DEPT.

JACKSON STREET CROSS SECTION "Q"

DRAWING NO. 725

APPROVED Gary Parkin 5/10
CITY ENGINEER DATE

NO.	REVISIONS	DATE	BY
1	NEW DRAWING	10/30/09	ZJW

MAY 2010

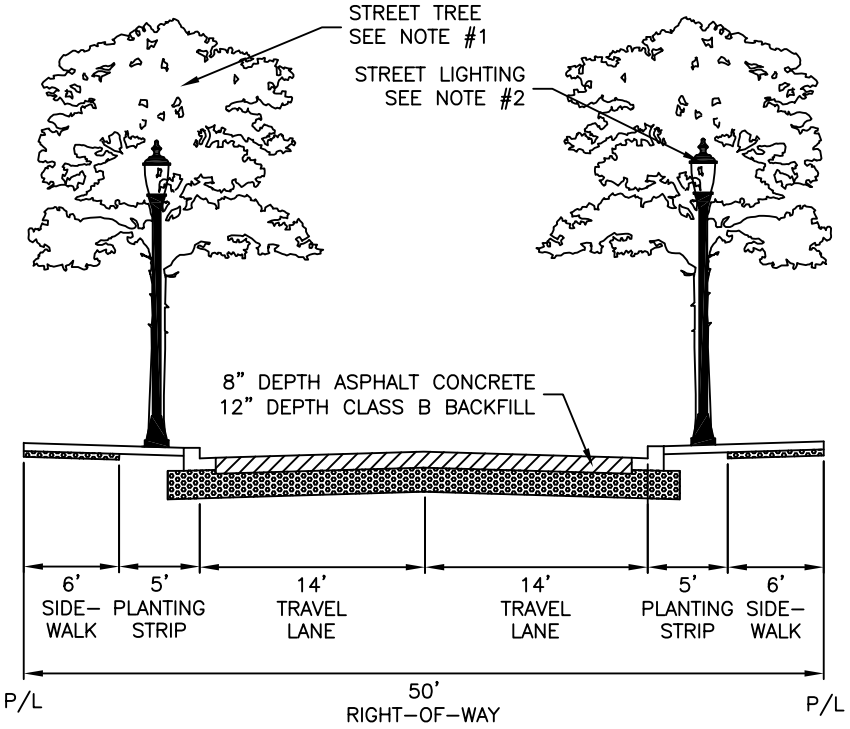

The City is in continual long range planning. These standards represent the best current plans but the City reserves the right to modify the plans.

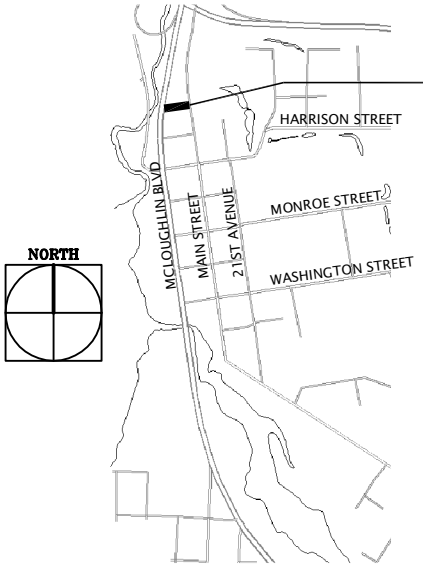

NEW STREET

- CONNECTS MCLOUGHLIN BOULEVARD TO MAIN STREET JUST NORTH OF THE N. MAIN REDEVELOPMENT SITE.
- NO PARKING AND 14' TRAVEL LANES.
- UNDERGROUND ALL UTILITIES.
- FOR STREET FURNITURE, SEE SECTION 3.5 OF DOWNTOWN PLAN.
- FOR BICYCLE FACILITIES, SEE SECTION 3.6 OF DOWNTOWN PLAN.

CONSTRUCTION NOTES

1. STREET TREES SHALL BE EITHER GLEDITSIA TRIACANTHOS 'SKYLINE HONEYLOCUST' OR PYRUS CALLERYANA 'CHANTICLEER PEAR' WITH A MINIMUM 2" CALIPER AT TIME OF PLANTING.
2. STREET LIGHTING SHALL BE POWDERCOAT BLACK SINGLE ORNAMENTAL LIGHTS. ORNAMENTAL LIGHT POLE SHALL BE HADCO P-2065. LIGHT FIXTURE SHALL BE REFRACTIVE GLOBE WITH VICTORIAN ROOF.

MILWAUKIE, OREGON · FOUNDED 1847

CITY OF MILWAUKIE, OREGON – PUBLIC WORKS DEPT.

NEW STREET CROSS SECTION "R"

DRAWING NO. 726

APPROVED Gary Parkin 5/10
CITY ENGINEER DATE

NO.	REVISIONS	DATE	BY
1	NEW DRAWING	03/05/10	JLR

MAY 2010

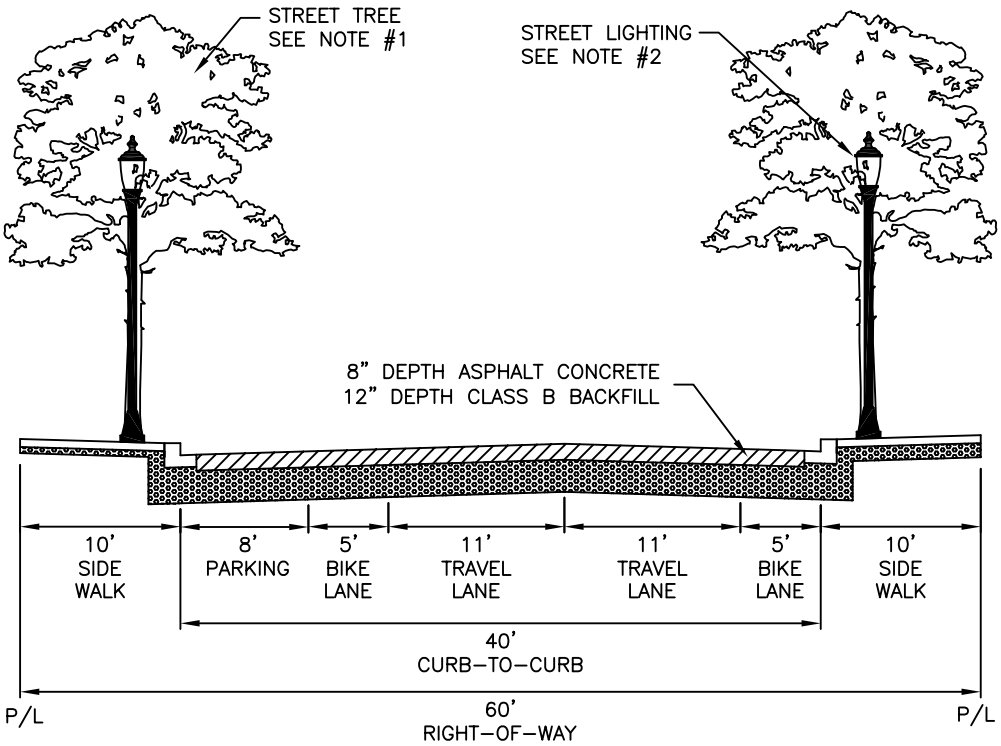

The City is in continual long range planning. These standards represent the best current plans but the City reserves the right to modify the plans.

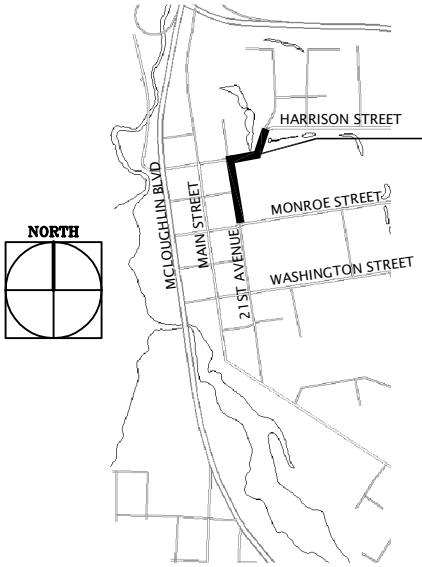

21st AVENUE, HARRISON STREET

- 21ST AVENUE FROM MONROE STREET TO HARRISON STREET; HARRISON STREET EAST OF 21ST AVENUE.
- UNDERGROUND ALL UTILITIES.
- FOR STREET FURNITURE, SEE SECTION 3.5 OF DOWNTOWN PLAN.
- FOR BICYCLE FACILITIES, SEE SECTION 3.6 OF DOWNTOWN PLAN.

CONSTRUCTION NOTES

1. STREET TREES SHALL BE ACER RUBRUM 'SUNSET RED MAPLE' WITH A MINIMUM 2" CALIPER AT TIME OF PLANTING.
2. STREET LIGHTING SHALL BE POWDERCOAT BLACK SINGLE ORNAMENTAL LIGHTS. ORNAMENTAL LIGHT POLE SHALL BE HADCO P-2065. LIGHT FIXTURE SHALL BE REFRACTIVE GLOBE WITH VICTORIAN ROOF.

MILWAUKIE, OREGON FOUNDED 1847

CITY OF MILWAUKIE, OREGON – PUBLIC WORKS DEPT.

21ST AVE, HARRISON STREET CROSS SECTION "S"

DRAWING NO. 727

APPROVED Gary Parkin 5/10
CITY ENGINEER DATE

NO.	REVISIONS	DATE	BY
1	NEW DRAWING	03/05/10	JLR

MAY 2010

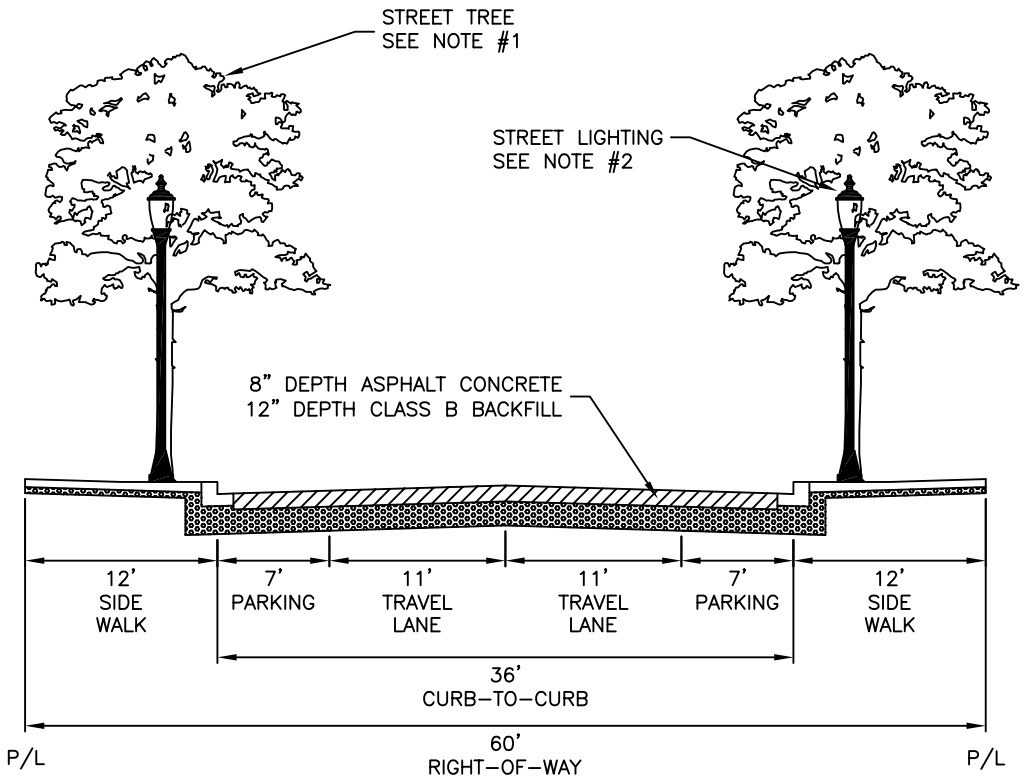

The City is in continual long range planning. These standards represent the best current plans but the City reserves the right to modify the plans.

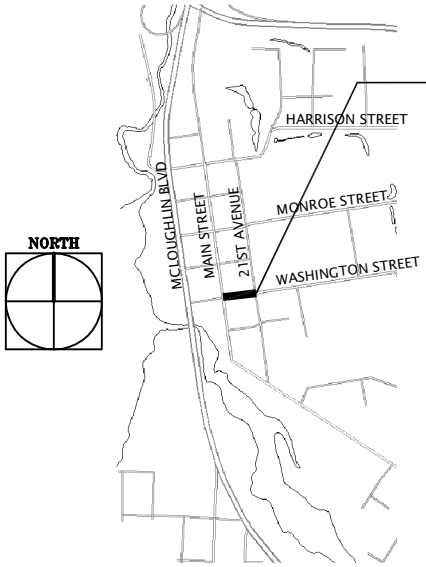

WASHINGTON STREET

- MAIN STREET TO 21ST AVENUE.
- NO LANDSCAPING STRIP.
- UNDERGROUND ALL UTILITIES.
- FOR STREET FURNITURE, SEE SECTION 3.5 OF DOWNTOWN PLAN.
- FOR BICYCLE FACILITIES, SEE SECTION 3.6 OF DOWNTOWN PLAN.

CONSTRUCTION NOTES

1. STREET TREES SHALL BE EITHER GLEDITSIA TRIACANTHOS 'SKYLINE HONEYLOCUST' OR PYRUS CALLERYANA 'CHANTICLEER PEAR' WITH A MINIMUM 2" CALIPER AT TIME OF PLANTING.
2. STREET LIGHTING SHALL BE POWDERCOAT BLACK SINGLE ORNAMENTAL LIGHTS. ORNAMENTAL LIGHT POLE SHALL BE HADCO P-2065. LIGHT FIXTURE SHALL BE REFRACTIVE GLOBE WITH VICTORIAN ROOF.

MILWAUKIE, OREGON · FOUNDED 1847

CITY OF MILWAUKIE, OREGON – PUBLIC WORKS DEPT.

WASHINGTON STREET CROSS SECTION "T"

DRAWING NO. 728

APPROVED Gary Parkin 5/10
CITY ENGINEER DATE

NO.	REVISIONS	DATE	BY
1	NEW DRAWING	03/05/10	JLR

MAY 2010

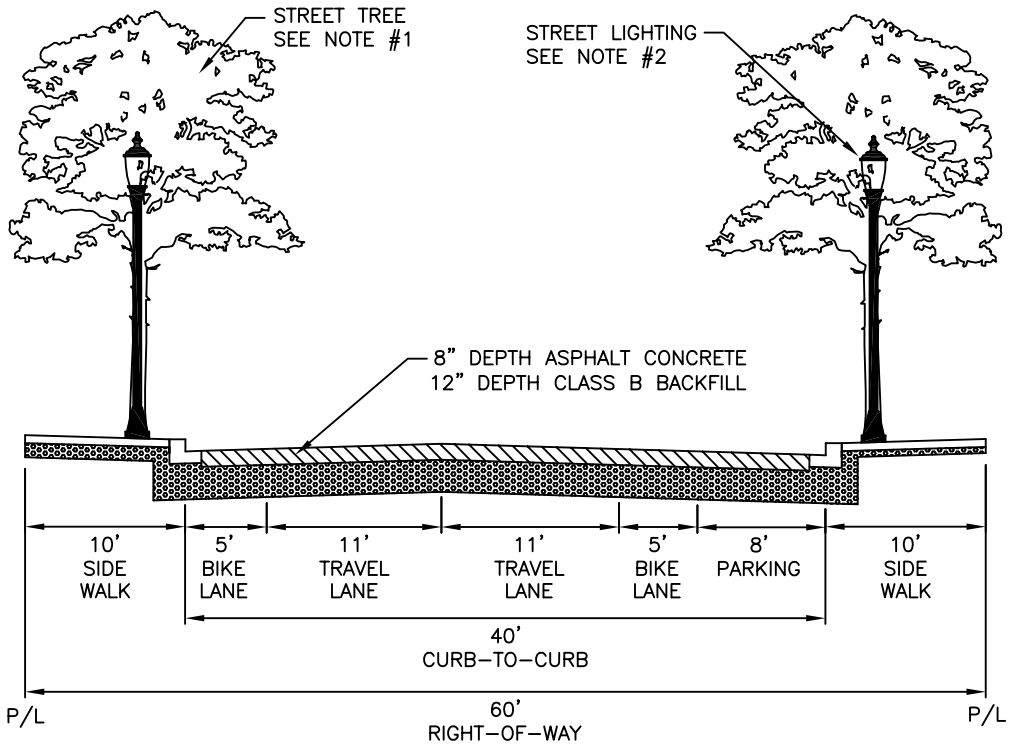

The City is in continual long range planning. These standards represent the best current plans but the City reserves the right to modify the plans.

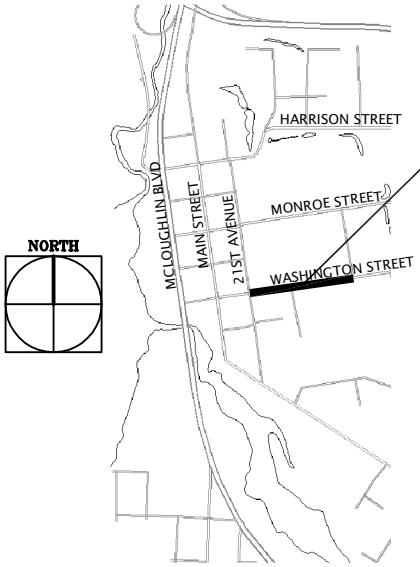

WASHINTON STREET

- EAST OF 21ST AVENUE
- SETBACKS REQUIRED ON BOTH SIDES.
- UNDERGROUND ALL UTILITIES
- FOR STREET FURNITURE, SEE SECTION 3.5 OF DOWNTOWN PLAN.
- FOR BICYCLE FACILITIES, SEE SECTION 3.6 OF DOWNTOWN PLAN.

CONSTRUCTION NOTES

1. STREET TREES SHALL BE EITHER GLEDITSIA TRIACANTHOS 'SKYLINE HONEYLOCUST' OR PYRUS CALLERYANA 'CHANTICLEER PEAR' WITH A MINIMUM 2" CALIPER AT TIME OF PLANTING.
2. STREET LIGHTING SHALL BE POWDERCOAT BLACK SINGLE ORNAMENTAL LIGHTS. ORNAMENTAL LIGHT POLE SHALL BE HADCO P-2065. LIGHT FIXTURE SHALL BE REFRACTIVE GLOBE WITH VICTORIAN ROOF.

MILWAUKIE, OREGON · FOUNDED 1847

CITY OF MILWAUKIE, OREGON – PUBLIC WORKS DEPT.

WASHINGTON STREET CROSS SECTION "U"

DRAWING NO. 729

APPROVED Gary Parkin 5/10
CITY ENGINEER DATE

NO.	REVISIONS	DATE	BY
1	NEW DRAWING	03/05/10	JLR

MAY 2010

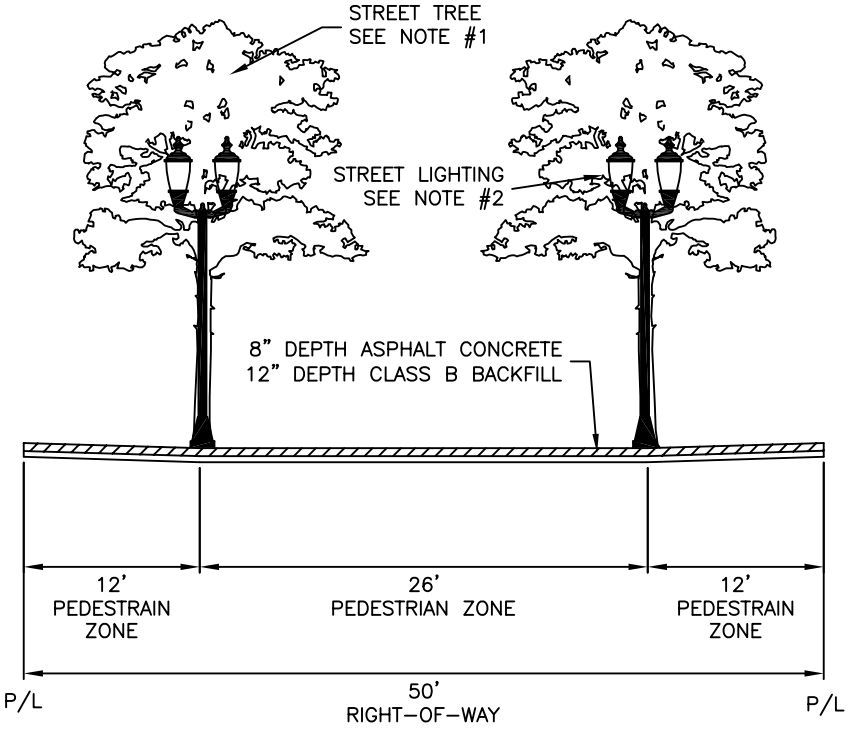

The City is in continual long range planning. These standards represent the best current plans but the City reserves the right to modify the plans.

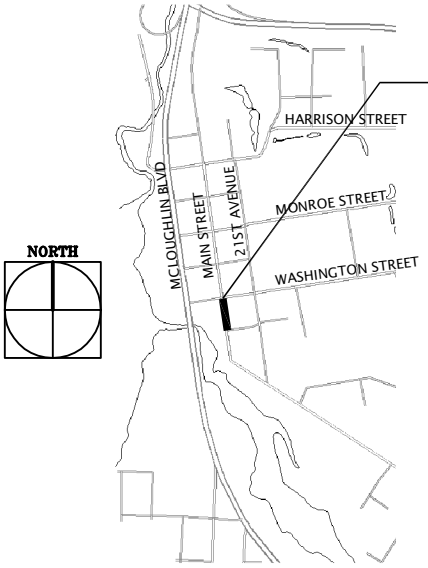

MAIN STREET

- SOUTH OF WASHINGTON STREET.
- UNDERGROUND ALL UTILITIES.
- FOR STREET FURNITURE, SEE SECTION 3.5 OF DOWNTOWN PLAN.
- FOR BICYCLE FACILITIES, SEE SECTION 3.6 OF DOWNTOWN PLAN.

NOTE: EXISTING RIGHT-OF-WAY IS 80 FEET. THE 50 FOOT DIMENSION SHOULD BE CENTERED ON EXISTING RIGHT-OF-WAY CENTERLINE. THE REMAINING 30 FEET OF THE RIGHT-OF-WAY IS TO BE VACATED.

CONSTRUCTION NOTES

1. STREET TREES SHALL BE EITHER GLEDITSIA TRIACANTHOS 'SKYLINE HONEYLOCUST' OR PYRUS CALLERYANA 'CHANTICLEER PEAR' WITH A MINIMUM 2" CALIPER AT TIME OF PLANTING.
2. STREET LIGHTING SHALL BE POWDERCOAT BLACK TWIN ORNAMENTAL LIGHTS. ORNAMENTAL LIGHT POLE SHALL BE HADCO P-2065. TWIN ORNAMENTAL LIGHT BRACKET SHALL BE HADCO PTH2520. LIGHT FIXTURE SHALL BE TWO REFRACTIVE GLOBE WITH VICTORIAN ROOF.

MILWAUKIE, OREGON · FOUNDED 1847

CITY OF MILWAUKIE, OREGON – PUBLIC WORKS DEPT.

MAIN STREET CROSS SECTION "AA"

DRAWING NO. 730

APPROVED Gary Parkin 5/10
CITY ENGINEER DATE

NO.	REVISIONS	DATE	BY
1	NEW DRAWING	03/05/10	JLR

MAY 2010