PUBLIC WORKS STANDARDS

Adopted Res. 32-2007
May 15, 2007
Last revised December 31, 2012

If you find errors in this document, or would like to submit comments, please use this form and mail, fax, or e-mail to the City of Milwaukie Engineering Department, at:

engineering@ci.miwaukie.or.us
6101 SE Johnson Creek Blvd
Milwaukie OR 97206
ph) 503-786-7606
fax) 503-774-8236

PUBLIC WORKS STANDARDS

MASTER TABLE OF CONTENTS

CONSTRUCTION STANDARDS

DIVISION 1—GENERAL REQUIREMENTS

101 DEFINITIONS AND ABBREVIATIONS 1-1
102 INSTRUCTIONS TO BIDDERS 1-5
103 AWARD AND EXECUTION OF CONTRACT 1-5
104 SCOPE OF WORK 1-5
105 CONTROL OF WORK 1-7
106 CONTROL OF MATERIALS 1-11
107 LEGAL RELATIONS AND RESPONSIBILITIES 1-13
108 PROSECUTION AND PROGRESS OF WORK 1-20

DIVISION 2—GENERAL CONSTRUCTION STANDARDS

201 MOBILIZATION 2-1
202 TEMPORARY TRAFFIC CONTROL 2-1
203 CLEARING AND GRUBBING 2-3
204 EXCAVATION, EMBANKMENT, BEDDING, AND BACKFILL 2-5
205 MATERIALS—TYPES AND USE 2-17
206 LANDSCAPING AND LANDSCAPE RESTORATION 2-28
207 RESTORATION AND CLEANUP 2-36
208 BORING AND JACKING 2-38
209 RESURFACING 2-41

DIVISION 3—SANITARY SEWER CONSTRUCTION STANDARDS

301 PIPE AND FITTINGS (SANITARY SEWER) 3-1
302 MANHOLES AND CONCRETE STRUCTURES 3-10
303 WORK ON EXISTING SANITARY SEWERS 3-16

DIVISION 4—WATER CONSTRUCTION STANDARDS

401 GENERAL 4-1
402 WATER WORKS MATERIALS 4-1
403 CONSTRUCTION 4-4

DIVISION 5—STREET CONSTRUCTION STANDARDS

501 SUBGRADE 5-1
502 WATERING 5-3
503 AGGREGATE BASES 5-3
504 CEMENT TREATED BASE 5-5
505 ASPHALT CONCRETE PAVEMENT 5-10
506 PORTLAND CEMENT CONCRETE PAVEMENT 5-20
507 CURBS, GUTTERS, DRIVEWAYS, AND SIDEWALKS 5-24
508 GEOTEXTILE FABRICS 5-28

DIVISION 5—STREET CONSTRUCTION STANDARDS (continued)

509 COLD PLANE PAVEMENT REMOVAL 5-30
510 VACANT 5-30
511 ADJUSTMENT OF EXISTING STRUCTURES TO GRADE 5-31

DIVISION 6—STORMWATER CONSTRUCTION STANDARDS

601 PIPE AND FITTINGS (STORM DRAINS) 6-1
602 MANHOLES, INLETS AND CONCRETE STRUCTURES 6-9
603 WORK ON EXISTING STORM DRAINAGE STRUCTURES 6-13

DIVISION 7—CONCRETE STRUCTURES CONSTRUCTION STANDARDS

701 CONCRETE STRUCTURES 7-1
702 REINFORCEMENT 7-10

DESIGN STANDARDS

SECTION 1—GENERAL REQUIREMENTS

1.0000 GENERAL 1-1
1.1000 CONSTRUCTION PLANS 1-10

SECTION 2—STORMWATER DESIGN STANDARDS

2.0000 STORM DRAINS 2-1

SECTION 3—SANITARY SEWER DESIGN STANDARDS

3.0000 SANITARY SEWERS 3-1
3.1000 SEWAGE PUMP STATION DESIGN STANDARDS 3-7

SECTION 4—WATER DESIGN STANDARDS

4.0000 WATER MAINS 4-1

SECTION 5—STREET DESIGN STANDARDS

5.0000 STREETS 5-1

STANDARD DRAWINGS

SANITARY 300-309
WATER 400-412
STREETS 500-524
STORM 600-624
DOWNTOWN 700-719

PUBLIC WORKS STANDARDS

REVISIONS LIST (as of 12/31/12)

DIVISION/SECTION	LAST REVISED
CONSTRUCTION STANDARDS	
DIVISION 1—GENERAL REQUIREMENTS	May 28, 2010
DIVISION 2—GENERAL CONSTRUCTION STANDARDS	May 28, 2010
DIVISION 3—SANITARY SEWER CONSTRUCTION STANDARDS	December 31, 2012
DIVISION 4—WATER CONSTRUCTION STANDARDS	December 31, 2012
DIVISION 5—STREET CONSTRUCTION STANDARDS	December 31, 2012
DIVISION 6—STORMWATER CONSTRUCTION STANDARDS	December 31, 2012
DIVISION 7—CONCRETE STRUCTURES CONSTRUCTION STANDARDS	May 28, 2010
DESIGN STANDARDS	
SECTION 1—GENERAL REQUIREMENTS	May 28, 2010
SECTION 2—STORMWATER DESIGN STANDARDS	December 31, 2012
SECTION 3—SANITARY SEWER DESIGN STANDARDS	December 31, 2012
SECTION 4—WATER DESIGN STANDARDS	December 31, 2012
SECTION 5—STREET DESIGN STANDARDS	December 30, 2011
STANDARD DRAWINGS	
SANITARY: 300-309	December 31, 2012
WATER: 400-412	December 31, 2012
STREETS: 500-524	December 31, 2012
STORM: 600-624	December 31, 2012
DOWNTOWN: 700-719	December 31, 2012

DIVISION 1—GENERAL REQUIREMENTS

TABLE OF CONTENTS

101 DEFINITIONS AND ABBREVIATIONS 1
101.01 DEFINITIONS 1
101.02 ABBREVIATIONS 4

102 INSTRUCTIONS TO BIDDERS 5

103 AWARD AND EXECUTION OF CONTRACT 5

104 SCOPE OF WORK 5
104.01 PLANS AND SPECIFICATIONS 5
104.02 PRECEDENCE OF CONTRACT DOCUMENTS 5
104.03 SHOP DRAWINGS AND OTHER SUBMITTALS 6
104.04 CHANGES IN THE WORK 6
104.05 FORCE ACCOUNT WORK 6
104.06 SALVAGE 7

105 CONTROL OF WORK 7
105.01 AUTHORITY OF THE CITY ENGINEER 7
105.02 AUTHORITY AND DUTIES OF INSPECTORS 7
105.03 RESPONSIBILITY OF CONTRACTOR 8
105.04 NOTIFICATION OF UTILITIES AND AGENCIES 8
105.05 UTILITIES AND EXISTING IMPROVEMENTS 8
105.06 SURVEY SERVICE 9
105.07 PROTECTION OF SURVEY MARKERS 9
105.07.01 Permanent Survey Markers 9
105.07.02 Construction and Survey Markers 9
105.08 PROTECTION OF PROPERTY 10
105.09 USE OF WORK DURING CONSTRUCTION 10
105.10 FURNISHING TEMPORARY SERVICES AND FACILITIES 10
105.11 VERBAL AGREEMENTS OR REPRESENTATIONS 11
105.12 WATER AND AIR POLLUTION CONTROL 11
105.13 NOISE 11
105.14 ACCESS TO THE WORK 11
105.15 DEFECTIVE OR UNAUTHORIZED WORK 11

106 CONTROL OF MATERIALS 11
106.01 PREFERENCE FOR USE OF OREGON PRODUCTS 11
106.02 QUALITY OF WORK 11
106.03 SAMPLING AND TESTING 12
106.04 CERTIFICATION 12
106.05 INSPECTION BY OTHERS 12
106.06 STORAGE AND PROTECTION OF ITEMS OF WORK 12

106.07 TRADE NAMES, EQUALS, OR SUBSTITUTIONS 13

107 LEGAL RELATIONS AND RESPONSIBILITIES 13

107.01 LAWS AND REGULATIONS 13
107.02 SUBCONTRACTORS 13
107.03 NO WAIVER OF LEGAL RIGHTS 14
107.04 OTHER CONTRACTS 14
107.05 LIABILITY AND INDEMNIFICATION 14
107.06 INSURANCE 15
107.06.01 General 15
107.06.02 Review and Approval of Insurance 15
107.06.03 Workers' Compensation, the Federal Longshoremens' and Harborworkers' Act, and the Federal Jones Act 15
107.06.04 General Liability and Automobile Liability 16
107.06.05 Claims on Project 17
107.06.06 Builders Risk Insurance 17
107.06.07 Insurance for Work in Railroad Rights-of-Way 17
107.07 ROYALTIES AND PATENTS 17
107.08 PERMITS 17
107.09 COMPLIANCE WITH ORS CHAPTER 279A, B, AND C (PUBLIC CONTRACTING CODE) 17
107.10 LABOR 18
107.11 OVERTIME 18
107.12 SAFETY 18
107.12.01 Employee Safety 18
107.12.02 Public Safety and Convenience 19
107.12.03 Safety Program 19
107.13 RIGHTS-OF-WAY, EASEMENTS, AND PREMISES 19
107.14 18-MONTH MAINTENANCE AND WARRANTY 19

108 PROSECUTION AND PROGRESS OF WORK 20

108.01 CONTRACTOR'S CONSTRUCTION SCHEDULE 20
108.02 PRECONSTRUCTION CONFERENCE 20
108.03 NOTICE TO PROCEED 20
108.04 CONTRACT TIME 20
108.05 SUSPENSION OF WORK 20
108.06 DELAYS AND EXTENSIONS OF TIME 21
108.07 LIQUIDATED DAMAGES 22
108.08 CONTRACTOR'S REPRESENTATIVE 22
108.09 CONFLICTS, ERRORS, OMISSIONS, AND ADDITIONAL DRAWINGS 23
108.10 CITY'S RIGHT TO DO WORK 23
108.11 TERMINATION FOR DEFAULT 23
108.12 TERMINATION IN THE PUBLIC INTEREST 24

101 DEFINITIONS AND ABBREVIATIONS

Unless otherwise defined in the contract documents the following definitions and abbreviations shall apply wherever used.

The words "directed, required, permitted, ordered, requested, instructed, designated, considered necessary, prescribed, approved, acceptable, satisfactory," or words of like import, refer to actions, expressions, and prerogatives of the City Engineer.

Command type sentences are used, but are not exclusive of other directives, throughout these Standard Specifications. In all cases the command expressed or implied is directed to the Contractor.

The specifications contained herein are divided into categories: (1) Division; (2) Section; and (3) Subsection, and are designated as in the following example:

Division: **DIVISION 3—SANITARY SEWER CONSTRUCTION STANDARDS**

Section: **302 MANHOLES AND CONCRETE STRUCTURES**

Subsections: **302.03 CONSTRUCTION**

302.03.01 General

A. Excavation and Backfill

1. (as needed)

a. (as needed)

101.01 DEFINITIONS

Acceptance of work
All work required by the contract documents and/or conditions of approval will be considered accepted upon approval of the Certificate of Completion by City.

Acts of God
An act of God is to be construed to mean an earthquake, flood, cloudburst, tornado, hurricane, or other phenomenon of nature of catastrophic proportions or intensity.

Advertisement
The public announcement inviting bids for work to be performed or materials to be furnished.

Attorney
The City Attorney of the City of Milwaukie, Oregon.

Certificate of Completion
Standard City form, which must be signed by the Contractor.

Certificate of Compliance
Standard City form, which must be signed by the Contractor, stating compliance with the contract documents and/or conditions of approval.

Change order
A written order issued by the City Engineer to the Contractor directing changes in the work, subject to approval of City.

City
The City of Milwaukie.

City Engineer
The City Engineer, or Engineering Director, of the City of Milwaukie, acting either directly or through authorized representatives.

Contract
The document entitled "contract" or "agreement" which is executed by the Contractor and the City; authorizing ordinance; advertisement calling for bids; bid; instructions to bidder; plans; and all specifications, addenda, permits, performance bond, insurance certificates, and change order for any approved revisions made during the performance of the work to any of the above listed documents, collectively referenced as the "contract documents."

Contract cost
The aggregate amount of price promised to be paid by City to Contractor upon fulfillment of the Contract.

Contract item
A specific unit of work for which a price or basis of payment is provided in the Contract.

Contractor
Any individual, firm, copartnership, corporation, or any combination thereof who has entered into a Contract with the City for a particular project. In the case of work being done under permit issued by the City, the permittee shall be construed to be the Contractor.

Day
Calendar day; i.e., any and every day shown on the calendar, Sundays and holidays included.

Easement
The right to use a defined area of property for specific purpose or purposes as set forth in the specifications.

Improvement
General term encompassing all phases of work to be performed under a Contract for a Local improvement District and synonymous with the terms "project" or "work."

Inspector
The authorized representative of the City Engineer whose authority, instructions, and decisions shall be limited to the particular duties and responsibilities entrusted to them in making detailed inspections of any or all portions of the work or materials therefor.

Lump sum
A method of payment providing for one all-inclusive payment for the work described to be done, complete and accepted without further measurement, as such work is covered under the applicable lump sum pay item.

Manager
The City Manager of the City of Milwaukie, Oregon, acting either directly or through authorized representatives.

Notice
A written communication delivered, by hand or by mail, to the authorized individual, member of the firm, or officer of the corporation for which it is intended. If delivered or sent by mail it shall be addressed to the last known business address of the individual, firm, or corporation. In the case of a Contract with two or more persons, firms, or corporations, notice to one shall be deemed notice to all.

OSHD Standard Specification
The latest edition of the Specification Document published by the State of Oregon entitled Standard Specifications for Highway Construction, Oregon State Highway Division. This document is available from the Oregon State Highway Division, Salem, Oregon.

Plans
The official Plans, profiles, cross sections, elevations, details and other working, supplementary and detail drawings, or reproductions thereof, signed by the City Engineer, which show the location, character, dimensions and details of the work to be performed. Plans may either be bound in the same book as the balance of the contract documents or bound in separate sets, and are a part of the contract documents, regardless of the method of binding.

Project
General term encompassing all phases of the work to be performed under the Contract and is synonymous with the term improvement or work.

Provide
When related to an item of work, the word provide shall be understood to mean furnish and install the work complete in place.

Reference specifications
Bulletins, standards, rules, methods of analysis or test, codes and specifications of other agencies, engineering societies, or industrial associations referred to in the contract documents. All such references specified herein refer to the latest edition thereof, including any amendments thereto which are in effect and published at the time of advertising for bids or of issuing the permit for the project.

Right-of-way
A general term denoting public land, property, or interest therein, acquired for or devoted to a public street, public access or public use.

Roadway
That portion of a street and its appurtenances between curbs, gutters, or ditches, primarily used for vehicular traffic.

Shop drawings and submittals
Supplementary plans or data or other information which the Contract requires the Contractor to submit to the City Engineer.

Shown
As used herein, the word shown, or as shown, shall be understood to refer to work shown on the Plans in the Contract.

Special Specifications
Requirements peculiar to the project and changes and modifications of the Standard Specifications.

Specified
As used herein, the word specified, or as specified, means as required by the Contract.

Standard plans or drawings
Details of structures, devices, or instructions adopted by City as a standard and referred to in the Contract.

Standard Specifications
The terms, directions, provisions and requirements set forth herein.

Station
A distance of 100 feet measured horizontally along the established centerline of a street, sewer, or other work, unless specified otherwise.

Street
Any street, avenue, boulevard, alley, lane, bridge, bicycle path, road, public thoroughfare or public way and any land over which a right-of-way has been obtained or granted for any purpose of public travel.

Subcontractor
An individual, partnership, firm, corporation, or any combination thereof, to whom the Contractor sublets part of the Contract.

Substantial completion
The work (or a specified part thereof) has progressed to the point where, in the opinion of the City Engineer, it is sufficiently complete in accordance with the contract documents and/or conditions of approval, so that the work (or specified part) can be utilized for the purposes for which it is intended.

Surety
The corporate body which is bound with and for the Contractor, for the acceptable performance of the Contract, and for their payment of all obligations arising out of the Contract.

Unit price
A contract item of work providing for payment based on specific unit of measurement; e.g., linear foot or cubic yard.

Use of pronoun
As used herein, the singular shall include the plural, and the plural the singular; and the term "person" includes natural person or persons, firm, copartnership, corporation or association, or combination thereof.

Utility
Tracks, overhead or underground wires, pipelines, conduits, ducts, or structures, owned, operated or maintained in or across a public right-of-way or easement.

Work
All material, labor, tools, equipment, and all appliances, machinery, transportation, and appurtenances necessary to perform and complete the Contract, and such additional items not specifically indicated or described which can be reasonably inferred as belonging to the item described or indicated and as required by good practice to provide a complete and satisfactory system or structure.

Working day
Calendar day, any and every day shown on the calendar, excluding Saturdays, Sundays and legal holidays.

101.02 ABBREVIATIONS

AAN	American Association of Nurserymen
AASHTO	American Association of State Highway and Transportation Officials
ACI	American Concrete Institute
AGA	American Gas Association
AGC	Associated General Contractors of America
AIA	American Institute of Architects
AISC	American Institute of Steel Construction
AISI	American Iron and Steel Institute
ANSI	American National Standards Institute
APWA	American Public works Association
ASCE	American Society of Civil Engineers
ASME	American Society of Mechanical Engineers
ASTM	American Society for Testing and Materials
AWPA	American Wood Preservers Association
AWS	American Welding Society
AWWA	American Water Works Association
COM	City of Milwaukie
CRSI	Concrete Reinforced Steel Institute
DEQ	Department of Environmental Quality
EPA	Environmental Protection Agency
FHWA	Federal Highway Administration
ITE	Institute of Traffic Engineers
NEC	National Electrical Code
NEMA	National Electrical Manufacturer's Association
NLMA	National Lumber Manufacturer's Association

ODOT	Oregon Department of Transportation
ORS	Oregon Revised Statutes
OSHA	Occupational Safety and Health Administration
OSHD	Oregon State Highway Division
PCA	Portland Cement Association
UBC	Uniform Building Code
UL	Underwriters' Laboratories, Inc.
USASI	United States of America Standards Institute
WWPA	Western Wood Products Association

102 INSTRUCTIONS TO BIDDERS

See City of Milwaukie's Public Contracting Rules Chapter 30.

http://psnet:90/notices/pubcontractrules06.pdf

103 AWARD AND EXECUTION OF CONTRACT

See City of Milwaukie's Public Contracting Rules Chapter 40.

http://psnet:90/notices/pubcontractrules06.pdf

104 SCOPE OF WORK

104.01 PLANS AND SPECIFICATIONS

The contract documents and/or conditions of approval will govern the work to be done. Anything mentioned in the Specifications and not shown on the Plans and detailed drawings, or shown on the Plans and detailed drawings and not mentioned in the Specifications, shall be of like effect as though shown or mentioned in both. Specifications and Plans referred to in any of the contract documents and/or conditions of approval shall be considered as being included in the document in which such reference is made. When a particular standard plan or Specification is referred to, such reference shall be to the standard plan or Specification which is in force at the time of advertising for bids. The phrases, "Contractor shall", "Contractor will", etc. may not always be specifically stated in all paragraphs but is considered understood where not specifically stated otherwise.

104.02 PRECEDENCE OF CONTRACT DOCUMENTS

In case of conflict, the order of precedence of the following documents in controlling the work shall be:

1. Contract
2. Addenda
3. Bid
4. Permits from outside agencies required by law
5. Special Specifications (Provisions)
6. Plans
7. Standard plans and standard details
8. Standard/Technical Specifications

Change orders, supplemental agreements and approved revisions to Plans and Specifications will take precedence over contract documents listed above.

104.03 SHOP DRAWINGS AND OTHER SUBMITTALS

Plans furnished and included with Specifications indicate the work proposed and the intended results.

By approving and submitting shop drawings, product data and samples, the Contractor represents that they have determined and verified all materials, field measurements, and field construction criteria related thereto, and that they have checked and coordinated the information contained within such submittals with the requirements of the work and of the contract documents and/or conditions of approval and that they have checked and coordinated the information contained within such submittals with the requirements of the work and of the contract documents and/or conditions of approval.

All required shop drawings, product data and samples shall be furnished to the City Engineer for their review and any required testing before any of the work or related work is performed or products or material ordered prior to the City Engineer's review and completion of any testing will be at Contractor's risk.

The City Engineer will review all shop drawings, product data and samples and conduct such tests as are required by the contract documents and/or conditions of approval within a reasonable time but in no event will the City Engineer be required to complete such review or conduct such tests in less than 14 days after submission. The Development Review Engineer will mail a letter stating one of the following:

1. Make corrections/additions noted: make the necessary changes and resubmit 1 set for review.
2. Set is ready for approval: send 6 drawing sets and 2 shall be returned to the Designing Engineer.

The review by the City Engineer of any shop drawings, product data, samples, construction methods and equipment or other submittals is only for conformance with the general design concept of the project and does not extend to consideration of structural integrity, safety, detailed compliance with contract requirements, or any other obligation of the Contractor. Any action shown is subject to the requirements of the plans and specifications. The Contractor is responsible for confirming and correlating all dimensions; fabricating and construction techniques; coordinating their entire work in strict accordance with the contract documents and/or conditions of approval. The review does not relieve Contractor from their obligation fully to perform all Contract requirements, nor shall such review give rise to any right of action or suit in favor of Contractor or third persons, against the City.

104.04 CHANGES IN THE WORK

Without invalidating the agreement and without notice to a surety, City may, at any time, order additions, deletions or revisions in the work: these will be authorized by a written amendment, a change order, or a work directive change.

Upon receipt of any such document, Contractor shall promptly proceed with the work involved that will be performed under the applicable conditions of the contract documents (except as otherwise specifically provided).

104.05 FORCE ACCOUNT WORK

The Contractor shall perform work on a force account basis upon written notice by the City Engineer. If the City Engineer determines that the work increases the amount due under the Contract, payment will be made pursuant as force account work.

The Contractor must maintain records in such a manner as to provide a clear distinction between direct cost of work performed on force account basis and costs of all other operations performed in connection with the Contract.

Daily, furnish to the City Engineer signed reports itemizing materials used and setting forth the cost of labor and charges for equipment rental, delineating whether said equipment is Contractor or Subcontractor owned. Provide names, identifications, and classifications of workmen, the hourly rate of pay and hours worked, and the size, type, and identification number of equipment and hours of equipment operation.

Substantiate material charges by vendor's invoices, submit such invoices with the reports; or, if not available, submit with subsequent reports. In the event said vendor's invoices are not submitted within 30 days after completion of the force account work owner reserves the right to establish the cost of such materials.

The City Engineer will compare their records with the reports furnished by the Contractor, make any necessary adjustments, compile the costs of work paid for on a force account basis and issue a change order covering the work.

104.06 SALVAGE

When shown or specified, carefully salvage and stockpile within the construction area all castings, pipe and any discarded facilities, to be disposed of by owner.

105 CONTROL OF WORK

105.01 AUTHORITY OF THE CITY ENGINEER

The City Engineer will decide all questions which may arise as to quantity, quality, and acceptability of materials furnished and work performed, the rate of progress of the work; interpretation of the Plans and Specifications; the measurement of all quantities; and the acceptable fulfillment of the Contract on the part of the Contractor. The City Engineer's estimates, decisions and approval signify favorable opinion and qualified consent; it does not carry with it certification or assurance of completeness, quality or accuracy concerning details. Such approval does not relieve Contractor from responsibility for errors, improper fabrication, improper construction methods, nonconformance to requirements or for deficiencies within their control.

It is further understood that all work to be done under the Contract will not be considered completed until it has passed final inspection by the City Engineer and is accepted by the City. It is further understood that the authority of the City Engineer is such that the Contractor shall at all times carry out and fulfill the instructions and directions of the City Engineer insofar as they concern the work to be done under the Contract.

The City Engineer shall have the authority to order unacceptable work to be corrected, removed or replaced, and unauthorized work to be removed and, pending completion of such order, to deduct the estimated cost thereof from any monies due, or to become due the Contractor including retainage. This authority shall take precedence over any and all requirements of the specifications for payment set forth elsewhere in the specifications.

At the City Engineer's sole discretion, minor defects in the work may be accepted subject to a reasonable deduction from the Contract price or other credits to the owner. Such determination by the City Engineer shall be final.

The City Engineer is not authorized to waive any written notice required of the Contractor by the Contract.

105.02 AUTHORITY AND DUTIES OF INSPECTORS

The City Engineer may appoint assistants to inspect all materials used and all work done. Such inspection may extend to any or all parts of the work and to the preparation or manufacture of materials to be used. Inspectors will not be authorized to revoke, alter, enlarge, or relax the provisions of the Contract. An Inspector is placed on the work to keep the City Engineer informed of progress of the work and the manner in which it is being done. In addition, the Inspector shall call to the attention of Contractor any deviation from the Plans, or Specifications.

An Inspector will not be authorized to approve or accept any portion of the work or to issue instructions contrary to the Plans and Specifications under this Contract. Furthermore, the Inspector is not authorized to waive any written notices required by the Contract. The Inspector will have authority to reject defective

material and to suspend any work that is being improperly done, subject to final decision by the City Engineer.

105.03 RESPONSIBILITY OF CONTRACTOR

Do all work and furnish all labor, materials, equipment, tools, and machines necessary for the performance and completion of the project in accordance with the Contract. Be obligated to determine and be responsible for the method of construction.

Contractor shall be solely liable for any accident, loss or damage happening to work referred to in the Contract prior to completion and acceptance thereof.

105.04 NOTIFICATION OF UTILITIES AND AGENCIES

Obtain prior approval from the City Engineer for closing or partial closing of any street. Give at least 2 working days advance notice of such closure to all agencies providing emergency services, including without limitation police, fire and ambulance services. Notification shall include, but not be limited to, the time of commencement and completion of work, names of streets or location of alleys to be closed, or partially closed, schedule of operations and routes of detours where applicable.

When performing work in streets and easements, whether inside or outside City's legal boundaries, notify all of the affected utilities and local agencies about the operations so as to properly coordinate and expedite the work in such a manner as to cause the least amount of conflict and interference between the operations and those of other agencies.

The Contractor and its Subcontractors must comply with all provisions of ORS 757.541 to 757.562 and 757.993 including notification of all owners of underground facilities at least 48 business day hours but not more than 10 business days before beginning work. Notify the following utilities and agencies in writing at least 2 working days before commencing any work on the project.

1. City of Milwaukie Public works Operations
2. Northwest Natural Gas Co.
3. Oregon Department of Transportation
4. Portland General Electric Co.
5. Comcast
6. Qwest Communications
7. Water Environment Services of Clackamas County

The City shall relocate or cause to be relocated all privately or publicly owned utility conduits, lines, poles, mains, pipes, and such other facilities within the jurisdiction and control of the City where such relocation is necessary in order to conform said utility and other facilities with the plans and ultimate requirements of the project. If desirable for specific reasons, or for convenience of field operations, contact the above listed utilities.

105.05 UTILITIES AND EXISTING IMPROVEMENTS

Information shown as to location of existing water courses, drains, sewer lines, or utility lines is provided for Contractor's information and convenience and is not, in any way, warranted to be accurate by the City. Contractor shall verify all such information and shall deal with varying conditions at its own expense.

Operation of water valves and hydrants by unauthorized personnel is strictly prohibited. Obtain written permission from and pay any fee required from the Water Authority in whose jurisdiction the work is being performed prior to using hydrant water.

Provide for the flow of sewers, drains, or water courses interrupted during the progress of the work, and restore such drains or water courses as approved by the City Engineer, at no additional cost to the City.

Be responsible for all costs for the repair of any and all damage to any utility, whether previously known or disclosed during the work, as may be caused by the work. Maintain in place utilities not shown on the drawings to be relocated or altered by others. If Contractor requires temporary relocation, for their convenience or because of their method of construction or as a result of site conditions, Contractor shall

bear all costs for said temporary relocation. Maintain utilities which have been relocated by others in their relocated positions in order to avoid interference with structures which cross the project work.

Make excavations and borings ahead of work, as necessary, to determine the exact location of interfering utilities or underground structures. When this is not feasible or practical or the need for such work was not foreseen, the utility owners or the City shall have the right to enter upon the right-of-way and upon any structure therein for the purpose of making new installations, changes or repairs. Conduct operations so as to provide the time needed for such work to be accomplished during the progress of the improvement, at no additional cost to the owner.

It is understood that there will be interfering utilities, service laterals, and other underground pipes, drains or structures encountered on underground projects that are not shown or are shown incorrectly on the plans and/or have not been previously discovered in the field. Contractor agrees this is a normal and usual occurrence in the construction of underground improvements. Furthermore, bidders understand and agree that work in some cases must be done in close proximity to said utilities and underground pipes, drains, and structures not shown or shown incorrectly on the plans which may require a change in operations and may cause sloughing of the trench, additional traffic control, additional pavement and backfill costs, and time; the Contractor agrees that a reasonable number of these occurrences are usual and ordinary on underground projects and are reflected in the bid and plan of operation.

The City Engineer will require a reasonable amount of time to perform design changes necessitated by directly conflicting utilities and/or the utility owners will require a reasonable amount of time to make necessary utility relocations.

The Bidders agree to provide for these conflicts and interferences and agree to provide for a reasonable amount of time for design changes and/or utility relocations due to said interference in the bid and understand that no additional compensation for interruption of schedule, extended overhead, delay or any other impact claim or ripple effect or any other costs whatsoever or additional time will be made for these conflicts or interferences.

105.06 SURVEY SERVICE

Give notice to the City Engineer not less than 3 working days in advance of when survey services will be required in connection with the laying out of any portion of the work.

The City Engineer will furnish appropriate offset lines and grades as they deem necessary for all projects involving trenching operations. Contractor will be responsible for the transfer of the offset lines or grades into the ditch, to batter boards, or any other point within the work. Work done without lines and grades having been established by the City Engineer or work done beyond the lines and grades will be considered as unauthorized and will not be paid for and may be ordered removed, replaced, or corrected at no expense to the City.

105.07 PROTECTION OF SURVEY MARKERS

105.07.01 Permanent Survey Markers

Notify the City Engineer not less than three working days prior to starting work in order that the City Engineer may take necessary measures to ensure the preservation of survey monuments, stakes, lot stakes, and bench marks. Do not disturb permanent survey monuments, stakes, lot stakes, or bench marks without the consent of the City Engineer, and notify the City Engineer and bear the expense of replacing any that may be disturbed.

When a change is made in the finished elevation of the pavement of any roadway in which a permanent survey monument is located, preserve the monument, and adjust the monument cover to the new grade at no expense to City.

105.07.02 Construction and Survey Markers

Preserve construction survey stakes and marks for the duration of their usefulness during construction. If any construction survey stakes are lost or disturbed through negligence of

Contractor, and in the judgment of the City Engineer need to be replaced, such replacement shall be by the City Engineer at the expense of Contractor. The cost of replacement shall be charged against, and shall be deducted from payments for Contract work.

105.08 PROTECTION OF PROPERTY

Protect all public and private property, insofar as it may be endangered by operations and take every reasonable precaution to avoid damage to such property.

Restore and bear the cost of any public or private improvement, facility, structure, or land and landscaping within the right-of-way or easement which is damaged or injured directly or indirectly by or on account of an act, omission, or neglect in the execution of the work. Restore to a condition substantially equivalent to that existing before such damage or injury occurred, by repairing, rebuilding, or otherwise effecting restoration thereof, or if this is not feasible, make a suitable settlement with the City of the damaged property.

Give reasonable notice to occupants of buildings on property adjacent to the work to permit the occupants to remove vehicles, trailers and other possessions as well as salvage or relocate plants, trees, fences, sprinkler systems, or other improvements in the right-of-way which are designated for removal or which might be destroyed or damaged by work operations.

Protect all designated trees, lawns and planted areas within the right-of-way or easements. Restore all on-surface disturbed areas, by methods as set forth in the technical specifications. If conditions are such that the method specified cannot be done, provide erosion control surface covering of such quality and quantity as will prevent erosion from occurring, without adverse impacts to the environment, if required by conditions existing at the site, at no additional cost to the City.

Review with the City Engineer the location, limits and methods to be used prior to clearing work. Clearing and grubbing shall be performed in strict compliance with all local, State and federal laws and requirements pertaining to clearing and burning, and particularly in conformity with the provisions of ORS Chapter 477, and all subsequent amendments, which require, among other things, filing with the State Forester a general description of the right-of-way to be cleared before the start of clearing operations. Obtain the required permit from the State Forester and City and perform clearing work in conformance thereto.

105.09 USE OF WORK DURING CONSTRUCTION

The City shall have the right to take possession of and use any completed or partially completed portions of the work. Such use shall not be considered as final acceptance of the work or portions thereof.

Such action by the City will not relieve the Contractor of responsibility for injury or damage to said completed portions of the work resulting from use by public traffic, action of the elements, Contractor's operations, defective work, or negligence, or from any other cause, except for injury or damage resulting from City's negligence. Contractor will not be required to again clean up such portions of the work prior to final acceptance, excepting for such clean up as results from Contractor's operations or defective work. Use of any completed or partially completed portions of the work does not relieve Contractor from the warranty responsibility nor shall the warranty period commence to run until final completion and acceptance of the work.

105.10 FURNISHING TEMPORARY SERVICES AND FACILITIES

Install, furnish and maintain temporary light, power, water and any temporary services or facilities complete with connecting piping, wiring, lamps, and similar equipment during construction of the work, including testing and start up. Remove temporary facilities upon completion of work. Obtain all permits and bear all costs in connection with temporary services and facilities. Conform to applicable statues, rules, codes, and other requirements in the use of these facilities.

105.11 VERBAL AGREEMENTS OR REPRESENTATIONS

No verbal agreement or conversation by or with any officer, agent or employee of the City, either before or after execution of the Contract, shall affect or modify any of the terms or obligations contained in any of the documents comprising the Contract. Any such verbal agreement or conversation is in no way binding upon the City.

105.12 WATER AND AIR POLLUTION CONTROL

During the term of the Contract, Contractor's operations shall conform to applicable laws and regulations of the Oregon DEQ, and other agencies of the State and Federal Government, City of Milwaukie Erosion Control Plans, as well as other local ordinances and resolutions designed to prevent, control, and abate water and air pollution.

During all phases of the work, or when directed, protect work sites, storage and disposal areas from washout and erosion, and take precautions to control or abate dust nuisance and air pollution by cleaning up, sweeping, sprinkling, covering, enclosing, or sheltering work areas, and stockpiles, and by promptly removing from paved streets earth or other material which may become airborne or may be washed into waterways or drainage systems.

105.13 NOISE

Conform and comply with applicable noise regulations as established in the City of Milwaukie Municipal Code 8.08. Work hours are restricted to the hours of 7:00 a.m. to 7:00 p.m. during the weekdays and 8:00 a.m. to 5:00 p.m. on the weekends.

105.14 ACCESS TO THE WORK

Provide access to the work for representatives of the City, the State of Oregon, the Federal Government, and other entities having jurisdiction in the area.

Allow access to the City Engineer or their representatives to all parts of the work and to plants of manufacturers at all times. Furnish them with every reasonable facility for ascertaining if the work meets requirements and intent of the Contract.

105.15 DEFECTIVE OR UNAUTHORIZED WORK

All work which does not conform to the requirements of the Contract shall be considered as unacceptable.

Upon discovery immediately remove unacceptable and defective work and replace by work and materials which conform to the Contract. This provision shall have full effect regardless of the fact that the unacceptable work may have been done or the defective materials used with the full knowledge of the Inspector.

106 CONTROL OF MATERIALS

106.01 PREFERENCE FOR USE OF OREGON PRODUCTS

Preference may be given to services, articles or materials produced or manufactured in Oregon, if price, fitness, availability and quality are otherwise equal. These provisions do not apply to Contracts on projects financed wholly or in part by federal funds.

106.02 QUALITY OF WORK

Materials, parts, products and equipment which are to be incorporated into the work shall be new and shall conform to the contract documents.

106.03 SAMPLING AND TESTING

Tests of the work may be made by City at any time during construction of the work or during the production, fabrication, or preparation and use of materials, parts, products, and equipment.

City reserves the right to require samples and to test products for compliance with pertinent requirements irrespective of prior certification of the products by the manufacturer.

When such tests of the work are necessary, as determined by the City Engineer, such tests will be made by and at the expense of City unless otherwise specified. Provide such facilities and cooperate as required for collecting and forwarding samples and do not incorporate into the work until tests have been made and found acceptable. In all cases furnish the required samples without charge and in ample time to permit testing prior to use. Provide safety measures and devices to protect those who take the samples.

In the absence of any reference Specification, it shall be understood that materials shall meet the Specifications and requirements of ASTM or AASHTO, as directed by the City Engineer. When there is no pertinent coverage under ASTM or AASHTO, the material concerned shall meet Specifications and requirements of applicable commercial standards of the Commodity Standards Division of the U.S. Department of Commerce. Lacking such coverage, materials shall meet requirements established by reputable industry for a high-quality product of the kind involved.

All testing shall be performed by the testing laboratory, the City Engineer, or as directed by the City Engineer.

In the event the City Engineer requests tests and the work fails, the Contractor shall bear all costs for this test and all subsequent testing necessary to meet specified requirements.

106.04 CERTIFICATION

The City Engineer may, at their sole discretion and in lieu of any other required sampling and testing, accept from Contractor 2 copies of the manufacturer's certification with respect to the product involved, under conditions set forth as follows:

1. Certification shall state that the named product conforms to City's requirements and that representative samples thereof have been sampled and tested as specified.
2. Certification shall either be accompanied by a certified copy of test results or certify that such test results are on file with the manufacturer and will be furnished to the City Engineer upon request.
3. Certification shall give the name and address of the manufacturer and the testing agency and the date of tests; and shall set forth the means of identification which will permit field determination of the product delivered to the project as being the product covered by the certification.
4. Contractor shall not be responsible for any costs of certification or for any costs of the sampling and testing of products in connection therewith.

106.05 INSPECTION BY OTHERS

Inspection of work by persons other than representatives of the City will not constitute inspection by the City.

106.06 STORAGE AND PROTECTION OF ITEMS OF WORK

Store items to be incorporated into the work to assure the preservation of their quality and fitness for the work. Stored items, even though approved before storage, may be reinspected and are subject to rejection prior to being incorporated into the work. Stored items shall be located so as to facilitate their prompt inspection.

106.07 TRADE NAMES, EQUALS, OR SUBSTITUTIONS

In order to establish a basis of quality, certain processes, types of machinery or equipment, or kinds of materials may be specified—either by description of process, by designating a manufacturer by name and referring to their brand or product designation, or by specifying a kind of material. It is not the intent of these specifications to exclude other processes, equipment, or materials of equal value, utility, or merit.

Whenever a process is designated; a manufacturer's name, brand, or item designation is given; or a process or material covered by patent is designated or described; it shall be understood that the words "or equal" follow such name, designation, or description, whether in fact they do so or not. This "or equal" clause is not a warrantee, either expressed or implied, by the City that an equal exists.

The Contractor may offer to furnish materials or equipment of equal or better quality and performance than that specified as a substitute after the Contract is executed. If the offer necessitates changes to, or coordination with, any other portion of the work, the data submitted shall include drawings and details showing all such changes. Contractor agrees to perform these changes as part of the substitution of material or equipment. Acceptance by the City Engineer shall not relieve the Contractor from full responsibility for the efficiency, sufficiency, quality, and performance of the substituted material or equipment in the same manner and degree as the material and equipment specified by name. Any cost differential associated with a substitution shall be reflected in the Contract price and the Contract shall be appropriately modified by change order.

If the bid includes a list of equipment, materials, or articles for which Contractor must name the manufacturer at time of submission of the bid, no substitutions therefore will be permitted.

All materials or equipment of equal or better quality offered by the Contractor for substituting shall be approved by the City Engineer prior to incorporation into the project.

107 LEGAL RELATIONS AND RESPONSIBILITIES

107.01 LAWS AND REGULATIONS

Comply with all federal and State laws; all local laws, ordinances, and regulations; and all orders and decrees of bodies or tribunals having any jurisdiction or authority, which in any manner affect those engaged or employed on the work, or which in any way affect the conduct of work. Observe and comply with all such laws, ordinances, regulations, orders, and decrees. Protect and indemnify City and their representatives against any claim or liability arising from, or based on, the violation of any such law, ordinance, regulation, order, or decree—whether by Contractor, their Subcontractors, suppliers of materials or services, or others engaged by the Contractor or their employees.

In addition to those set forth herein, the City’s Public Contracting rules and the Statutes of the State of Oregon for public works contracts, ORS Chapters 279A and 279C, are incorporated by reference into the Contract.

107.02 SUBCONTRACTORS

After Contract award and notice of Contractor/Subcontractor agreements have been submitted, work shall not be transferred or subcontracted without prior consent of the City.

Use of subcontractors, material suppliers or equipment suppliers shall in no way release Contractor from any obligations of contract with the City.

Contractor will provide in all subcontract agreements that the Subcontractor, material supplier and equipment supplier will be bound by the terms and conditions of this Contract to the extent that they relate to the Subcontractor's work, material or equipment. All Subcontractor's agreements will also provide that they are assignable to the City at City's option, in the event this agreement is terminated for default of Contractor.

107.03 NO WAIVER OF LEGAL RIGHTS

The City shall not be precluded by any measurement, estimate or certificate made either before or after completion and acceptance of work or payment therefore, from showing the true amount and character of work performed and materials furnished by the Contractor, or from showing that any such measurement, estimate or certificate is untrue or incorrectly made, or that work or materials do not conform in fact to the Contract. The City shall not be precluded, notwithstanding any such measurement, estimate or certificate, or payment in accordance therewith, from recovering from the Contractor and their sureties such damages as it may sustain by reason of their failure to comply with terms of the Contract, or from enforcing compliance with the Contract. Neither acceptance by the City, or by any representative or agent of the City, of the whole or any part of the work, nor any extension of time, nor any possession taken by the City, nor any payment for all or any part of the project, shall operate as a waiver of any portion of the Contract or of any power herein reserved, or any right to damages herein provided. A waiver of any breach of the Contract shall not be held to be a waiver of any other breach.

107.04 OTHER CONTRACTS

The City reserves the right to award other contracts or issue permits for work that may require coordination with the work to be performed under this Contract.

When separate contracts or permits are awarded or issued for different portions of the Project, "the Contractor" in the contract documents in each case shall be the contractor who signs each separate contract.

Mutual Responsibility of Contractors: The Contractor shall afford other contractors reasonable opportunity for the introduction and storage of their materials and equipment and the execution of their work, and shall properly connect and coordinate their work with theirs.

If any part of the Contractor's work depends for proper execution or results upon the work of any other separate Contractor, the Contractor shall inspect and promptly report to the City Engineer any apparent discrepancies or defects in such work that render it unsuitable for such proper execution and results. Failure of the Contractor to inspect and report shall constitute an acceptance of the other Contractor's work as fit proper to receive the work, except as to defects which may develop in the other separate contractor's work after the execution of the Contractor's work.

Should the Contractor cause damage to the work or property of any separate contractor which results in a claim against the City, and if the claim is not satisfied by Contractor and the separate contractor sues the City or initiates an arbitration proceeding on account of any damage alleged to have been so sustained, the City shall notify the Contractor who shall defend if requested such proceedings at the Contractor's expense, and if any judgment or award against the City arises therefrom the Contractor shall pay or satisfy it and shall reimburse the City for all attorney's fees and court or arbitration costs which the City has incurred.

The Contractor shall be responsible for any cutting, fitting and patching that may be required to complete the work except as otherwise specifically provided in the Contract. The Contractor shall not endanger any work of any other contractors by cutting, excavating or otherwise altering any work and shall not cut or alter the work of any other contractor. Any costs caused by defective or ill-timed work shall be borne by the party responsible therefore.

If a dispute arises between the separate contractors as to their responsibility for cleaning up, the City may clean up and charge the cost thereof to the several contractors as the City Engineer shall determine to be just.

107.05 LIABILITY AND INDEMNIFICATION

The Contractor shall assume all responsibility for the work and shall bear all losses and damages directly or indirectly resulting to the Contractor, to the City, to the City Engineer, and to their officers, agents, and employees on account of (a) the character or performance of the work, (b) unforeseen difficulties, (c) accidents, or (d) any other cause whatsoever.

The Contractor shall defend, indemnify, and hold harmless the City, the Design Engineer, and their officers, agents and employees from all claims, loss, damage, and injury of every kind directly or indirectly arising out of this Contract. The Contractor shall assume this responsibility even if (a) fault is the basis of the claim, and (b) any act, omission or conduct of the City connected with the Contract is a condition or contributory cause of the claim, loss, damage or injury.

The Contractor shall not be liable for, nor be required to defend, or indemnify the City or the Design Engineer relative to any claim, loss, damage, or injury resulting solely from acts or omissions by the City, the Design Engineer, or their officers, agents or employees. The Contractor shall not be liable for, not be required to defend, or indemnify the City or the Design Engineer relating to any claim loss, damage, or injury arising from the use of any maps, drawings, reports, surveys, designs, or specifications furnished by the City, Design Engineer, or their officers, agents, or employees.

Any specific duty or liability imposed or assumed by the Contractor, as may be otherwise set forth in the contract documents, shall not be construed as a limitation or restriction of the general liability or duty imposed upon the Contractor by this section.

The Contractor shall assume all responsibility for the work.

107.06 INSURANCE

107.06.01 General

The Contractor shall provide and maintain during the life of this Contract the insurance coverage designated hereafter. All costs for such insurance shall be born by the Contractor and shall be included in the Contract price.

Prior to execution by the City and before commencing work under this Contract, Contractor shall furnish the City Engineer with certificates of insurance specified herein showing the name of the insurance carrier, coverage, type, amount (or limits), policy numbers, effective and expiration dates, description of operations covered, and containing substantially the following cancellation provision:

"The insurance covered by this certificate will not be canceled or materially reduced, except after 30 days written notice has been received by the City."

In case of the breach of any provision of this Article, the City, at its option, may take out and maintain, at the expense of the Contractor, such insurance as the City may deem proper. The City may deduct the cost of such insurance from any monies which may be due or become due the Contractor under this Contract.

107.06.02 Review and Approval of Insurance

The Contractor shall not commence work under this Contract nor allow any subcontractor to commence work on a subcontract until the Contractor has obtained all the insurance required hereunder and such insurance has been approved by the Attorney. All policies or insurance and certificates of insurance shall be satisfactory to the City. Approval of the insurance shall not relieve or decrease the liability of the Contractor hereunder.

107.06.03 Workers' Compensation, the Federal Longshoremens' and Harborworkers' Act, and the Federal Jones Act

The Contractor shall provide and shall require all subcontractors to provide workers' compensation coverage for all persons employed under this Contract including the Contractors' partners and any individual regardless of relation to the Contractor's partners and any individual regardless of relation to the Contractor or to the partners who provide work under this Contract. The Contractor shall be required to assure that subject workers will receive the compensation for compensable injuries provided in ORS Chapter 656 either by:

1. a carrier-insured employer; or
2. a self-insured employer as provided by ORS 656.407.

In addition to the statutory benefits outlined above, the Contractor and all Subcontractors shall provide employers' liability insurance with limits of not less than:

1. $100,000 each accident for bodily injury by accident
2. $100,000 each employee for bodily injury for disease
3. $500,000 policy limit for bodily injury by disease

Evidence of such coverage, including the guaranty or warrant period, shall be filed with the City and maintained for the duration of the Contract.

The Contractor shall defend, indemnify, and hold harmless, the City and the City's officers, agents, and employees against any liability that may be imposed upon them by reason of the Contractor's or Subcontractor's failure to provide workers' compensation and employers liability coverage.

Where work under this Contract is subject to the Federal Longshoremens' and Harborworkers' Act or the Federal Jones Act, the Contractor shall provide coverage for such exposure.

107.06.04 General Liability and Automobile Liability

The Contractor shall provide a general liability policy that provides coverage for bodily injury including personal injury and property damage liability insurance and automobile liability insurance. Such insurance must protect the Contractor, the City, and their officers and employees from all things or damage which may arise out of this Contract or in connection therewith, including all operations of Subcontractors. Such insurance shall provide coverage for not less than the amounts for which public bodies are responsible as set forth in ORS Chapter 30.260 - 30.300, Tort Actions against public bodies, but in no event less than the following limits of liability:

1. $1,000,000 each occurrence
2. $1,000,000 general aggregate
3. $1,000,000 product and completed operations aggregate
4. $1,000,000 personal and advertising injury
5. $1,000,000 combined single limit automobile liability for owned, nonowned, and hired automobiles.

The policy shall contain an endorsement that the aggregate applies separately to this Contract.

The insurance shall be written on a comprehensive form which includes broad form property damage on an occurrence basis. Unless excluded by Special Specification, the general liability policy shall include, without deductible, coverage for premises operations, explosion and collapse hazard, underground hazard, products, completed operations, contractual insurance, and independent contractors. Such insurance shall be maintained until the expiration of the guaranty period required by the Contract. Failure to maintain liability insurance as provided above shall, at City's option, because for immediate termination of the Contract.

The Contractor shall provide a letter from the insurance company which states that such insurance shall be without prejudice to coverage otherwise existing.

The City of Milwaukie, its officers, agents, and employees, shall be named additional insureds in the Contractor's General Liability Insurance policy by attaching ISO Endorsement number CG 20 09 11 85 Additional Insured - Owners, Lessees, or Contractors (Form A) or its equivalent.

The policy shall also provide for a Cross Liability Endorsement or Separation of Insureds Endorsement.

The policy shall be endorsed to provide an Amendment - Aggregate Limits of Insurance (per project) specifying that a separate aggregate limit of liability applies to this Contract.

If there are insufficient insurance proceeds and assets of the Contractor to fully indemnify the City of Milwaukie, its officers, employees, agents, and the City Engineer, then the City, its officers, employees, and agents would be indemnified first with any remaining insurance proceeds and assets to be used to indemnify the City Engineer.

If set forth in the Special Specifications, additional insureds may be the City Engineer, other governmental bodies with jurisdiction in the area involved in the project, and their officers and employees and such agents as may be specified.

107.06.05 Claims on Project

The Contractor, when notified of a claim by an affected party shall:

1. Refer claim to the Contractor's insurance carrier or claims administrator.
2. Contractor's insurer will copy the City on acknowledgment of claim.
3. Contractor's insurer will copy the City on notice to claimant of disposition of claim.

107.06.06 Builders Risk Insurance

During construction, Contractor shall obtain and maintain for the benefit of the parties to the Contract as their interest may appear, all-risk builder's risk insurance to the extent of 100% of the value of the project. Coverage shall also include: (1) formwork in place; (2) form lumber on site; (3) temporary structures; (4) equipment; and (5) supplies related to the work while at the site. Such insurance shall be endorsed to require 30 days' written notice to the City prior to cancellation or change of the policy. One (1) copy of the policy and 2 certificates of such insurance shall be delivered to the City before commencing work and shall be subject to review and approval by the City. The City may temporarily waive delivery of the copy of the policy. In the event Contractor fails to maintain such insurance, the City may arrange therefore; and any premium incurred shall be to the account of Contractor.

107.06.07 Insurance for Work in Railroad Rights-of-Way

During construction in railroad rights-of-way, Contractor shall obtain and maintain insurance as required by the individual railroads.

107.07 ROYALTIES AND PATENTS

Contractor shall pay all royalties and license fees required to perform the work. Defend and indemnify City, from all loss or damage that may result from the Contractor's wrongful or unauthorized use of any patented article or process.

107.08 PERMITS

Contractor shall obtain all Municipal, County, State, federal, or other permits or licenses necessary or incident to performance of the work under this Contract. Work within the railroad right-of-way requires permit by the rail authority and railroad operators in addition to the above. Comply with all permit requirements pertaining to the project.

107.09 COMPLIANCE WITH ORS CHAPTER 279A, B, AND C (PUBLIC CONTRACTING CODE)

Comply, and require all Subcontractors to comply, with the City's Public Contracting Rules, the requirements of the applicable State statutes, and be subject to the applicable liabilities provided in ORS Chapter 279A, B and C, such as, but not limited to, the statutes that are numbered and referenced, and incorporated herein by an abbreviated subject matter, and listed below and the statutes required to be set forth as conditions in public contracts, which follows.

LIST

1. ORS 279C.375 Award of contract; Bond; Waiver of bond in case of emergency.
2. ORS 279C.540 Maximum hours of labor on public contracts; holidays; exceptions.
3. ORS 279C.840 Workers on public works to be paid not less than prevailing rate of wage.
4. ORS 279C.845 Certification of rate of wage by Contractor or Subcontractor.

5. ORS 279C.850 Inspection to determine whether prevailing rate of wage being paid; proceedings to require payment of prevailing rate of overtime.

6. ORS 279C.855 Liability of Violations.

107.10 LABOR

Upon notification in writing from the City Engineer, remove immediately from the job for its duration any laborer, workman, mechanic, foreman, superintendent, or other person employed who is found to be incompetent, intemperate, troublesome, disorderly or otherwise objectionable, or who fails or refuses to perform their work properly or acceptably.

Comply with provisions of the City's Equal Opportunity Policy and to ORS Chapter 659 relative to unlawful employment practices and discrimination by employers against any employee or applicant for employment because of race, religion, color, sex, or national origin. Particular reference is made to ORS 659.030, which states that it is unlawful employment practice for any employer, because of the race, religion, color, sex, or national origin of any individual, to refuse to hire or employ or to bar or discharge from employment such individual or to discriminate against such individual in compensation or in terms, conditions or privileges of employment.

107.11 OVERTIME

In addition to the requirements set forth in Specification 107.09, Contractor shall notify the City Engineer of any overtime operations as soon as possible. The Contractor must provide documentation to the City Engineer's satisfaction justifying the overtime work (ORS 279C.520).

In the event that the Contractor wishes to proceed with an overtime operation, the Contractor must first notify and obtain approval from the City Engineer to do so, prior to commencing such work.

For overtime work requested by the Contractor, the Contractor shall pay the applicable wage rate for the City Engineer's Inspector, engineering and operations personnel, and other staff required at the project during the overtime hours.

This section does not apply to labor performed in the manufacture or fabrication of any material ordered by the Contractor or manufactured or fabricated in any plant or place other than the place where the main Contract is to be performed.

107.12 SAFETY

107.12.01 Employee Safety

The Contractor shall at all times be responsible for the safety of their employees and their Subcontractor's employees. The Contractor shall maintain the job site and perform the work in a manner which meets the City's responsibility under statutory and common law for the provision of a safe place to work and which complies with the City's written safety regulations, if any.

Conduct the project with proper regard for the safety and convenience of the public. When the project involves use of public ways, provide necessary flag persons and install and maintain means of reasonable access to all fire hydrants, service stations, warehouses, stores, houses, garages, and other property. Private residential driveways shall be closed only with approval of the City Engineer or specific permission of the property owner. Do not interfere with normal operation of public transit vehicles unless otherwise authorized. Do not obstruct or interfere with travel over any public street or sidewalk without approval. At all times provide open trenches and excavations with secured and adequate barricades or fences of an approved type which can be seen from a reasonable distance. Close up or plate all open excavations at the end of each working day in all street areas unless approved otherwise by the City Engineer and in all other areas when it is reasonably required for public safety or as directed by the City Engineer. At night, mark all open work and obstructions by lights. Install and maintain all necessary signs, lights, flares, barricades, railings, runways, stairs, bridges, and facilities. Observe all safety instructions received from the City Engineer or governmental authorities, but following of such instructions

shall not relieve Contractor from its responsibility or liability for accidents to workmen or damage or injury to person or property.

107.12.02 Public Safety and Convenience

The Contractor shall at all times conduct their work so as to insure the least possible obstruction to traffic and convenience to the general public and residents in the vicinity of the work and to insure the protection of persons and property. No road or street shall be closed to the public except with the permission of the City Engineer and proper governmental authority. Fire hydrants on or adjacent to the work shall be kept accessible to fire fighting equipment at all times. Temporary provisions shall be made by the Contractor to insure the use of sidewalks, private and public driveways and proper functioning of all gutters, sewer inlets, drainage ditches and culverts, irrigation ditches and natural water courses. The Contractor will minimize inconvenience to others due to mud and dust.

107.12.03 Safety Program

The Contractor shall adopt a written safety program complying with the requirements of employee and public safety set forth hereinabove and as described in the Special Conditions. The safety program shall also comply with OAR Chapter 437, Division 3, regarding general safety and health provisions.

107.13 RIGHTS-OF-WAY, EASEMENTS, AND PREMISES

Confine construction activities within property lines, right-of-way, limits of easements and limits of construction permits as shown or specified in the contract documents unless arrangements are made with owner(s) of adjacent private property. If additional space or property is needed to accommodate Contractor's method for construction of the work or for the convenience of the Contractor, Contractor shall bear all related costs and responsibilities. Prior to the use of any private property outside the specified boundaries, file with the City Engineer written permission from the property owner(s).

Do not unreasonably encumber the specified work areas with materials and equipment. Obtain and bear the costs of permits for special occupancy and use of the specified work areas from the proper agencies. Comply with all requirements regarding signs, advertisements, fires and smoking.

107.14 18-MONTH MAINTENANCE AND WARRANTY

In addition to and not in lieu of any other warranties required under the Contract make all necessary repairs and replacements to remedy, in a manner satisfactory to the City Engineer and at no cost to City, any and all defects, breaks, or failures of the work occurring within 18 months following the date of substantial completion due to faulty or inadequate materials or workmanship. Repair damage or disturbances to other improvements under, within, or adjacent to the work, whether or not caused by settling, washing, or slipping, when such damage or disturbance is caused, in whole or in part, from activities of the Contractor in performing their duties and obligations under this Contract when such defects or damage occur within the warranty period. The 18-month maintenance period required shall, with relation to such required repair, be extended 2 years from the date of completion of such repair.

If Contractor, after written notice, fails within 10 days to proceed to comply with the terms of this section, City may have the defects corrected, and Contractor and Contractor's surety shall be liable for all expense incurred. In case of an emergency where, in the opinion of the City Engineer, delay would cause serious loss or damage, repairs may be made without notice being given to Contractor and Contractor or surety shall pay the cost of repairs. Failure of the City Engineer to act in case of an emergency shall not relieve Contractor or surety from liability and payment of all such costs.

In addition to the above provisions, City of Milwaukie waterline facilities installed by the Contractor under this Contract that require repair or replacement during the 18-month maintenance period shall be repaired by the City or under the direction of the City and the Contractor and Contractor's surety shall be liable for all expenses incurred.

108 PROSECUTION AND PROGRESS OF WORK

108.01 CONTRACTOR'S CONSTRUCTION SCHEDULE

Within 30 days of Contract award or 1 week in advance of starting work, whichever is earlier, submit for written approval a proposed construction schedule to the City Engineer. Contractor may not commence work until construction schedule is approved by the City Engineer.

If it is desirable to carry on operations in more than one location simultaneously, submit a schedule for each location at least 1 week in advance of beginning such operations. In the event that the Contractor's proposed construction schedule does not meet the necessary construction program schedule as determined by City, immediately resubmit a schedule that conforms as approved. Contractor shall not commence work until schedule is approved by the City Engineer.

The schedule shall show the proposed order of work and indicate the time required for completion of the major items of work. This working schedule shall take into account the passage and handling of traffic with the least practicable interference therewith and the orderly, timely and efficient prosecution of work. It will also be used as an indication of the sequence of the major construction operations and as a check on the progress of work.

108.02 PRECONSTRUCTION CONFERENCE

Attend a preconstruction conference, if requested, at a time, prior to start of work, designated by the City Engineer. Comply with information and instructions provided at the preconstruction conference as recorded in the minutes of the meeting.

108.03 NOTICE TO PROCEED

Unless stated otherwise in the Special Specifications, written Notice to Proceed will be given by the City Engineer within 30 days after the performance and payment bond and all required insurances have been filed with and approved by the City and the Contract has been executed. Do not commence work under the Contract until such written notice has been given.

Notice to Proceed may be delayed up to an additional 30 days (for a total of sixty 60 days) from date of Contract by the City Engineer if, in the City Engineer's opinion, necessary easements or permits have not been obtained, or required utility relocation, construction, or reconstruction has not been completed or has not progressed to a degree that will allow initial contract work to commence.

Commence work within 10 working days after the date of the Notice to Proceed, or such other date as may be fixed by the Notice to Proceed, which date shall establish the date for commencement of the Contract time. Notify the City Engineer 48 hours in advance of the time and place work will be started.

108.04 CONTRACT TIME

Time shall be considered the essence of the Contract.

Upon commencement of work, Contractor shall provide adequate labor, materials, and equipment, and work shall be performed vigorously and continuously in accordance with a schedule which will ensure completion within the specified time limit. Failure to diligently pursue the work may jeopardize additional contract time.

108.05 SUSPENSION OF WORK

If the work is suspended for convenience: Temporarily suspend work on the Project wholly or in part for convenience of the City as directed by the City Engineer. In the event of such suspension, the City Engineer shall, except in emergency, and except as hereinafter provided, give Contractor 3 days' notice. Work shall be resumed within 5 days after notice has been given by the City Engineer to Contractor to do so. The City Engineer shall allow Contractor an extension of time for completion corresponding to the total period of temporary suspension, and shall reimburse Contractor for necessary rental of unused

equipment, services of watch persons, and other unavoidable expenses accruing by reason of the suspension, as stipulated in Subsection 108.05 (E), Delays and Extensions of Time.

If work is suspended by the City Engineer: Immediately suspend work on the project, wholly or in part, as directed by the City Engineer, for reasonable periods of time as the City Engineer may deem necessary, when conditions are unsuitable for satisfactory performance of the work. The City shall allow the Contractor an extension of time for completion corresponding to the total period of suspension, but the Contractor shall not be entitled to reimbursement for any costs or damages arising under this clause.

If work is suspended for cause: Immediately suspend work on the Project wholly or in part as directed by the City Engineer for such periods as the City Engineer may deem necessary due to: (1) failure to correct unsafe conditions for working personnel, the general public, or City's employees, (2) failure to immediately correct defective and unacceptable work in accordance with Subsection 105.15, (3) failure to carry out provisions of the contract documents and/or conditions of approval, and (4) failure to carry out orders or directives.

Voluntary suspension by Contractor: There shall be no voluntary suspension or slowing of operations without the prior written approval of the City Engineer and such approval shall not relieve Contractor from the responsibility to complete the Contract work within the prescribed Contract time. Should operations be discontinued, Contractor shall notify, in writing, the City Engineer at least 24 hours in advance of resuming operations.

Responsibilities of Contractor:

1. At the commencement of and during any suspension of work, protect all work performed to prevent any damage or deterioration of the work. Provide temporary protection devices to warn, safeguard, protect, guide, and inform traffic during suspension, the same as though the work had been continuous and without interferences.

2. Bear all costs for providing suitable provisions for traffic control and for maintenance and protection of the work during suspension unless the suspension was for convenience.

In all cases of suspension, except voluntary suspension by Contractor, work will be resumed only upon written order of the City Engineer or City.

108.06 DELAYS AND EXTENSIONS OF TIME

If the Contractor is significantly delayed due to court orders enjoining the prosecution of this Project, unavoidable strikes, acts of God, unusual and extraordinary action of the elements that are of such severity to stop all progress of the work, or act or neglect of the City not authorized by the Contract, the Contractor shall, within 48 hours of the start of the occurrence, give notice to the City Engineer of the cause of the potential delay and estimate the possible time extension involved. Within 10 days after the cause of the delay has been remedied the Contractor shall give notice to the City Engineer of any actual time extension requested as a result of the aforementioned occurrence.

No extension of time will be considered for weather conditions normal to the area and time of year in which the work is being performed. Delays in delivery of equipment or material purchased by the Contractor or their Subcontractors (including City-selected equipment) shall not be considered as a just cause for delay, when timely ordering would have made the equipment available. The Contractor shall be fully responsible for the timely ordering, scheduling, expediting, delivery, and installation of all equipment and materials. Extensions of time will be considered for delayed delivery of the City specified equipment "without equal."

Within a reasonable period after the Contractor submits to the City Engineer a written request for an extension of time the City Engineer will make the decision on each request, for City Manager approval.

An adjustment of Contract time as herein provided shall be the Contractor's sole remedy for any delay in completion of the project arising from causes beyond the control of the Contractor, except for unreasonable delay caused by acts or omissions of the City or persons acting therefor. In no event shall the Contractor be entitled to collect or recover any damages, loss or expense incurred by reason of such

delay, except for an unreasonable delay caused by acts or omissions of the City or persons acting therefor. However, if Contractor is delayed due solely to a breach by the City, Contractor will be entitled to recover damages limited to reimbursement for necessary rental of unused equipment, services of watch persons, documented direct overhead costs, documented direct unavoidable expenses accruing by reason of the suspension, plus 15% of the foregoing damages to cover normal Contractor profit. Contractor shall not be entitled to indirect costs or any other damages arising out of the delay, including but not limited to, interruption of schedules, or any other impact claim or ripple effect. If a delay is caused by the City and Contractor (joint delay), Contractor shall be entitled to a time extension only, by reason of such joint delay.

108.07 LIQUIDATED DAMAGES

Time shall be considered the essence of the Contract. If Contractor fails to complete the project or to deliver the supplies or perform the services within the time specified in the Contract or any extension thereof by the City, the actual damage to City for the delay will be substantial but will be difficult or impractical to determine.

It is therefore agreed that Contractor will pay to City, not as a penalty but as liquidated damages, the per diem amount, as set forth in the following given Schedule of Liquidated Damages or modification thereof as given in the Special Provisions for each and every calendar day elapsed in excess of the Contract time or the final adjusted Contract time applicable to the work required under the Contract.

SCHEDULE OF LIQUIDATED DAMAGES			
Original Amount of Contract		Per Diem Amount of Liquidated Damages	
For More Than	To and Including	Calendar Day*	Working Day
$ 0	$ 25,000	$ 40	$ 55
25,000	50,000	65	85
50,000	100,000	110	150
100,000	500,000	150	210
500,000	1,000,000	225	315
1,000,000	2,000,000	300	420
2,000,000	5,000,000	450	630

*Calendar day amounts are applicable when the contract time is expressed on the calendar day, calendar workday or fixed date basis.

Permitting Contractor to continue and finish the work or any part thereof after the Contract time or adjusted Contract time, as pertinent, has expired shall in no way operate as a waiver on the part of the City or any of its rights under the Contract.

Payment of liquidated damages shall not release Contractor from obligations in respect to the fulfillment of the entire Contract, nor shall the payment of such liquidated damages constitute a waiver of City's right to collect any additional damages which may be sustained by failure of Contractor to carry out the terms of the Contract, it being the intent of the parties that said liquidated damages be full and complete payment only for failure of Contractor to complete the work on time.

108.08 CONTRACTOR'S REPRESENTATIVE

Designate, in writing before starting work, an authorized representative who shall have complete authority to represent and to act for Contractor, in all directions given by the City Engineer. Contractor, or its authorized representative shall supervise the work, and shall be present on site continually during its progress.

If Contractor or its authorized representative is not present, directions may be given by the City Engineer or their authorized representative to the workmen and such order shall be received and followed. Any direction will be confirmed in writing upon request from the Contractor.

Keep a complete copy of the Plans and Specifications on or near the site at all time.

108.09 CONFLICTS, ERRORS, OMISSIONS, AND ADDITIONAL DRAWINGS

Check and compare all Plans and Specifications prior to construction and notify the City Engineer of any discrepancies or omissions in order to permit correction by the City Engineer. Coordination of Plans and Specifications is intended. Furnish labor and materials as required for the work. Should any work or materials be reasonably required or intended for carrying the project to completion which are omitted on the Plans and Specifications, furnish same as fully as if particularly delineated or described. The intent of the Plans and Specifications is to show and describe a complete project within the limits stated. Dimensions shown on Plans shall be followed, rather than scale measurements. Whenever it appears that the Plans are not sufficiently detailed or explicit, the City Engineer may furnish additional detail drawings or written instructions and Contractor shall perform the work in accordance with the additional details or instructions.

108.10 CITY'S RIGHT TO DO WORK

Failure or refusal to comply with any of the terms or conditions of the Contract will permit the City to supply or correct any deficiency or defect or take other appropriate action without prejudice to any other remedy. Such action by City shall be taken only after 7 days notice by the City Engineer to Contractor and their surety, unless in the judgment of the City Engineer an emergency or danger to the work or to the public exists, in which event action of the City as set forth above may be taken without any notice whatsoever. The cost of such action by the City shall be deducted from the payment then or thereafter due Contractor. Pay the City any costs in excess of such payment due.

108.11 TERMINATION FOR DEFAULT

If the Contractor should be adjudged bankrupt, or if they should make a general assignment for the benefit of their creditors, or if a receiver should be appointed on account of insolvency, or if they should refuse to or fail to supply enough properly skilled workmen or proper materials for the efficient prosecution of the Project, disregard laws, ordinances or the instructions of the City Engineer, or otherwise be in violation of any provision of the Contract, the City may, without prejudice to any other right or remedy and after giving the Contractor and its surety 7 days' written notice, terminate the services of the Contractor and take possession of the premises and of all materials, tools and appliances thereon as well as all other materials whether on the premises or not, on which the Contractor has received partial payment and finish the work by whatever method it may deem expedient.

In the event action as above indicated is taken by the City, the Contractor, or its surety, shall provide the City Engineer with immediate and peaceful possession of all of the materials, tools and appliances located on the premises as well as all other materials whether on the premises or not, on which the Contractor has received any progress payment. Upon termination, in the event that the surety does not complete the Contract, at the election of the City, Contractor shall assign any and all Subcontractors and material contracts to the City or City's designee. Further, the Contractor shall not be entitled to receive any further payment until the work is completed. On completion of the work, determination shall be made by the City Engineer of the total amount the Contractor would have been entitled to receive for the work, under the terms of the Contract, had Contractor completed the work. If the difference between said total amount and the sum of all amounts previously paid to the Contractor, which difference will hereinafter be called the "unpaid balance," exceeds the expense incurred by the City in completing the work, including expense for additional managerial and administrative services, such excess will be paid to the Contractor, with the consent of the surety. If, instead, the expense incurred by the City exceeds the unpaid balance, the amount of the excess shall be paid to the City by the Contractor or their surety. The expense incurred by the City as herein provided, and the damage incurred through the Contractor's default, shall be as determined and certified by the City Engineer.

In addition to and apart from the above-mentioned right of the City to terminate the employment of the Contractor, the Contract may be canceled at the election of the City for any willful failure or refusal on the part of the Contractor to faithfully perform the Contract according to all of its terms and conditions; provided, however, that in the event the City should cancel the Contract, neither the Contractor nor its

surety shall be relieved from damages or losses suffered by the City on account of the Contractor's breach of Contract.

The City may, at its discretion, avail itself of any or all of the above rights or remedies and its invoking of any one of the above rights or remedies will not prejudice or preclude the City from subsequently invoking any other right or remedy set forth above or elsewhere in the Contract.

None of the foregoing provisions shall be construed to require City to complete the work, not to waive or in any way limit or modify the provisions of the Contract relating to the fixed and liquidated damages suffered by City on account of failure to complete the Project within the time prescribed.

108.12 TERMINATION IN THE PUBLIC INTEREST

It is hereby agreed that the City has the right to terminate the Contract in whole or in part when it is considered to be in the public interest.

In the event the Contract is terminated as being in the public interest the Contractor shall be entitled to a reasonable amount of compensation for preparatory work and for all costs and expenses arising out of the termination excluding lost profits.

The amount to be paid to the Contractor:

1. Shall be determined on the basis of the Contract price in the case of any fully completed separate item or portion of the work for which there is a separate or unit Contract price; and
2. In respect to any other work, the Contractor will be paid a percent of the Contract price equal to the percentage of the work completed.

END OF DIVISION

DIVISION 2—GENERAL CONSTRUCTION STANDARDS

TABLE OF CONTENTS

201 MOBILIZATION 1
201.01 DESCRIPTION 1
201.02 MATERIALS 1
201.03 CONSTRUCTION 1
201.03.01 General 1

202 TEMPORARY TRAFFIC CONTROL 1
202.01 DESCRIPTION 1
202.02 MATERIALS 1
202.02.01 Uniform Traffic Control Devices 1
202.03 CONSTRUCTION 1
202.03.01 General 1
202.03.02 Traffic Control Within the Project 2
202.03.03 Construction and Maintenance of Detours 2
202.03.04 Flagging Requirements 2
202.03.05 Dust Control 2

203 CLEARING AND GRUBBING 3
203.01 DESCRIPTION 3
203.02 MATERIALS 3
203.03 CONSTRUCTION 3
203.03.01 General 3
203.03.02 Timber Salvage 3
A. Trees in Street Right-of-Way 3
B. Trees on City-Owned Property 4
203.03.03 Protection of Existing Vegetation 4
203.03.04 Clearing 4
203.03.05 Clearing Borrow and Waste Disposal Areas 4
203.03.06 Grubbing and Stripping 4
203.03.07 Disposal of Waste Material 4
203.03.08 Backfilling and Clean-up 4
203.03.09 Removal and Replacement of Signs, Mailboxes, Posts, etc. 5

204 EXCAVATION, EMBANKMENT, BEDDING, AND BACKFILL 5
204.01 DESCRIPTION 5
204.01.01 General 5
204.01.02 Unclassified Excavation 5
204.01.03 Rock Excavation 5
204.01.04 Trench Excavation 6
204.01.05 Embankment 6

204.01.06 Foundation Stabilization 6
204.01.07 Pipe Zone 6
204.01.08 Trench Backfill 6
204.02 MATERIALS 6
204.02.01 Embankment Materials 6
204.02.02 Foundation Stabilization 6
204.02.03 Pipe Zone Material 6
204.02.04 Class A Backfill, Native Backfill Material 6
204.02.05 Class B Backfill, Crushed Aggregate (¾"-0 or as specified) 7
204.02.06 Class C Backfill, Clean Sand 7
204.02.07 Class D Backfill, Pit or Bar-Run Material 7
204.02.08 Class E Backfill, Controlled Density Fill 8
204.02.09 Imported Topsoil 8
204.02.10 Native Topsoil 8
204.02.11 Water 8
204.02.12 Explosives 8
204.03 CONSTRUCTION 8
204.03.01 Excavation 8
204.03.02 Rock Excavation and Explosives 8
A. Depth of Excavation 8
B. Methods and Records Required 9
C. Use of Explosives 9
D. Trench Blasting 9
204.03.03 Preservation of Existing Improvements 9
204.03.04 Excavation of Existing Improvements and Miscellaneous 9
204.03.05 Limits of Excavation 10
204.03.06 Slope Grading 10
204.03.07 Foundation Stabilization 10
204.03.08 Disposal of Excess Material 10
204.03.09 Temporary Location of Excavated Materials 10
204.03.10 Surface Removal and Replacement for Trenches 10
A. Removal and Replacement of Topsoil 10
B. Removal of Pavement, Curbs, Driveways, and Sidewalks 11
204.03.11 Trench Excavation and Shoring 11
A. Maximum Length of Open Trench 11
B. Trench Width 12
C. Grade 12
D. Shoring, Sheeting, and Bracing of Trenches 12
204.03.12 Dewatering 12
204.03.13 Compaction 13
204.03.14 Embankment 13
A. Roadway Embankment 13
B. Pipeline Embankment 14
C. Embankment for Structural Foundations 14
204.03.15 Pipe or Conduit Pipe Zone Bedding 14

204.03.16 Pipe Zone Placement 14
204.03.17 Trench Backfill and Compaction 14
A. General 14
B. Class A, B, C, or D Backfill 15
C. Controlled Density Fill 15
D. Compaction Testing 15
E. Trench Maintenance 16

205 MATERIALS—TYPES AND USE 17

205.01 DESCRIPTION 17
205.02 MATERIALS 17
205.02.01 General 17
205.02.02 Portland Cement Concrete 17
205.02.03 Cement Mortar 17
205.02.04 Cement Grout 17
A. Type "A" Grout 17
B. Type "B" Grout 18
205.02.05 Steel Reinforcement 18
205.02.06 Dowels 18
205.02.07 Structural Joint Material 18
205.02.08 Curing Materials for Portland Cement Concrete 18
205.02.09 Epoxy Cement 18
205.02.10 Portland Cement 18
205.02.11 Water 19
205.02.12 Aggregates 19
A. Description 19
B. Materials 19
C. Fine Aggregate (Sand) 20
205.02.13 Asphalt Materials 21
A. General 21
B. Asphaltic Cement 21
C. Tack Coat 21
D. Slurry Seal 21
205.02.14 Controlled Density Fill 22
205.02.15 Geotextiles 22
A. Description 22
B. Definitions 22
C. Acceptance Requirements 23
D. Geotextile Property Values 24
205.03 CONSTRUCTION 24
205.03.01 Description 24
205.03.02 Geotextile Installation Requirements 24
A. Acquisition and Storage 24
B. Placement 25
C. Overlaps 25

D. Field Seams 25
E. Protection of Geotextile 26
F. Repair of Geotextile 26
G. Drainage Geotextile 26
H. Embankment Geotextile 26
I. Riprap Geotextile 26
J. Wall Geotextile 27
K. Subgrade Geotextile 27
L. Pavement Overlay Geotextile 28

206 LANDSCAPING AND LANDSCAPE RESTORATION 28

206.01 DESCRIPTION 28
206.02 MATERIALS 28
206.02.01 Plants 28
206.02.02 Seed 28
206.02.03 Sod 28
206.02.04 Topsoil 28
A. Native Topsoil 28
206.02.05 Sand 29
206.02.06 Organic Material for Soil Amendment 29
206.02.07 Lime 29
206.02.08 Subdrains 29
206.02.09 Irrigation and Water Systems 29
A. Pipe 29
B. Main Valves 29
C. Pressure Reducing Valves 29
D. Control Valves 29
E. Quick-Coupling Valves 30
F. Risers 30
G. Backflow Prevention 30
206.02.10 Fertilizer 30
206.02.11 Mulch and Ground Covers 30
206.02.12 Tie Downs 30
206.02.13 Soil Sterilant 31
206.03 CONSTRUCTION 31
206.03.01 General 31
206.03.02 Soil Test 31
206.03.03 Lawns and Grass 31
A. Project Schedule 31
B. Delivery, Handling, and Storage of Sod 31
C. Preparation of Subgrade 31
D. Subsurface Drainage 31
E. Topsoil and Finish Grading 32
F. Soil Sterilant 32
G. Seeding 32

H. Sodding 32
I. Mulching and Protection of Slopes 32
J. Maintenance 32
K. Lawn Guarantee 33
L. Inspection for Acceptance 33
206.03.04 Trees, Shrubs, and Ground Cover 33
A. Delivery, Preparation, and Storage 33
B. Soil Conditioning 34
C. Planting Procedures 34
D. Pruning and Repair 35
E. Plant Guarantee 35
F. Maintenance 35
206.03.05 Irrigation Systems 36
A. General 36
B. Steel Pipe 36
C. Copper Tubing 36
D. PVC Pipe 36

207 RESTORATION AND CLEANUP 36

207.01 DESCRIPTION 36
207.02 MATERIALS 37
207.03 CONSTRUCTION 37
207.03.01 Surface Dressing 37
207.03.02 Removal of Materials 37
207.03.03 Cleaning Drains 37
207.03.04 Cleaning Paved Surfaces and Appurtenances 37
207.03.05 Restoring Planted Areas 37
207.03.06 Restoring Mobilization, Borrow, and Disposal Areas 37
207.03.07 Removal of Signs 37
207.03.08 Restoring Curbs, Sidewalks, and Driveways 38

208 BORING AND JACKING 38

208.01 DESCRIPTION 38
208.01.01 Boring 38
208.01.02 Jacking 38
208.01.03 Permits 38
208.02 MATERIALS 38
208.02.01 Pipe Bedding and Pipe Zone Material 38
208.02.02 Pipe 38
208.02.03 Casing 38
208.02.04 Grout 39
208.02.05 Stainless Steel Bands 39
208.02.06 Supports and Skids 39

208.03 CONSTRUCTION 39
208.03.01 General 39
208.03.02 Excavation 39
208.03.03 Alternate of Jacking or Boring 40
208.03.04 Jacking and Boring 40
208.03.05 Concrete Pipe and Box Section 40
208.03.06 Smooth Steel Casing 40
208.03.07 Grouting Voids Outside Casing or Carrier Pipe 40
208.03.08 Cased Pipe 41
208.03.09 Grouting Void Between Carrier Pipe and Casing 41
208.03.10 Contractor's Responsibility 41

209 RESURFACING 41

209.01 DESCRIPTION 41
209.02 MATERIALS 41
209.02.01 Asphalt Concrete 41
209.02.02 Pavement Base 41
209.02.03 Forms 41
209.02.04 Rock Surfacing 41
209.02.05 Subgrade 42
209.02.06 Joint Materials 42
A. Preformed Elastomeric Joint Seals 42
B. Poured Filler 42
C. Rubber Gaskets for Concrete Pipe and Precast Section Joints 42
D. Joint Mortar for Concrete Pipe Joints and Precast Manhole Section Joints 42
E. Plastic Compound for Precast Manhole Section Joints 42
F. Water Stop 42
209.03 CONSTRUCTION 43
209.03.01 Street Maintenance 43
209.03.02 Temporary Cold Mix Asphalt 43
209.03.03 Pavement Base 44
209.03.04 Asphalt Concrete Pavement 44
A. Tack Coat 44
B. Asphalt Concrete Placement 44
C. Seal Coat 44
D. Surface Smoothness 45
E. Weather Conditions 45
F. Protection of Structures 46
G. Excess Materials 46
209.03.05 Portland Cement Concrete Pavement 46
209.03.06 Rock Surfacing 46
209.03.07 Concrete Driveways, Sidewalks, and Curbs 46

201 MOBILIZATION

201.01 DESCRIPTION

This section covers, but is not limited to, work necessary to obtain all bonds, insurance, licenses, and permits; move in personnel and equipment; set up all offices, buildings, and facilities; provide all required light, power, and water; install project information signs if required; prepare for construction complete; demobilize, including removal of all facilities and clean up; and all other work to successfully complete the project which is not covered in other bid items.

201.02 MATERIALS

Provide all materials required to accomplish the work as specified.

201.03 CONSTRUCTION

201.03.01 General

Set up construction facilities in a neat and orderly manner within designated or approved work area. Provide for an acceptable material and equipment storage area. Supply all labor and equipment necessary to accomplish the work as specified. Conform to applicable requirements of Section 105 (Control of Work) including, but not limited to, (1) required notifications, (2) protection of surveying monuments and other markers, (3) temporary traffic control, (4) temporary utility connections, (5) protection of property, (6) water and air pollution, and (7) noise.

202 TEMPORARY TRAFFIC CONTROL

202.01 DESCRIPTION

This section covers all work necessary to conduct construction operations so as to offer the least possible obstruction and inconvenience to the public and to protect pedestrian and vehicular traffic.

202.02 MATERIALS

202.02.01 Uniform Traffic Control Devices

Provide barricades, signs, and traffic control devices built in conformance with the Manual on Uniform Traffic Control Devices (current edition), published by the U.S. Department of Transportation, and the Oregon supplements to the Manual published by the Oregon Department of Transportation.

202.03 CONSTRUCTION

202.03.01 General

Use flag persons and provide and maintain such signs, barricades, warning lights, and other traffic control devices in conformance with the manuals referenced in Subsection 202.02.01 (Uniform Traffic Control Devices). Adequately warn the public at all times of existing conditions on all streets affected by work operation.

Patrol the construction area at least twice daily and reset all disturbed signs and traffic control devices immediately. Remove or cover nonapplicable signs when not needed. Prior to closing or partial closing of any street, conform to Subsection 105.04 (Notification of Utilities and Agencies).

202.03.02 Traffic Control Within the Project

Formulate and submit a traffic control plan and a work schedule to minimize the disruption of traffic. Plan shall be submitted at the pre-construction conference. If no conference is held, plan shall be submitted at least 10 days in advance of beginning work. Obtain approval of plan and schedule from the City Engineer before commencing work. Allow traffic to pass through the work with as little inconvenience and delay as possible.

The traffic control plan shall contain a complete signing plan for semipermanent and portable signs, barricades, and other traffic controls, provisions to keep the signs or devices current with the construction activities and the illumination of all detours and obstructions during hours of darkness. Be responsible for furnishing, installing, and maintaining all traffic control devices. Maintain these devices at all times including nonworking hours.

Provide approved access to private properties at all times, except during stages of construction when it is impractical to perform construction and maintain access to private property simultaneously, as determined by the City Engineer. When access is to be denied notify occupants of affected properties at least 24 hours in advance.

When, in the judgment of the City Engineer, vehicular parking is a hazard to through traffic or to the work, furnish and place "NO PARKING" signs on any street which is directly involved in the construction work.

Only one intersection will be closed at a time without prior approval by the City Engineer. The Contractor will notify Police and Fire departments in the jurisdiction of the closing and opening of streets. Pedestrian detours shall not exceed one block in length and all footbridges will be provided with adequate handrails.

202.03.03 Construction and Maintenance of Detours

Construct and maintain temporary detours for protection of the work and the safe passage of traffic around work area.

Conform to requirements for detours in Subsection 107.12 (Safety).

202.03.04 Flagging Requirements

The Contractor shall provide and maintain such signs, barricades and warning lights as are necessary to warn and protect the public at all times on highways, roads or streets affected by work operations. In addition, the Contractor shall also provide all necessary ODOT certified flag persons and guards necessary to warn and protect the public. Each flagger on duty shall wear an orange or yellow colored hard hat and an orange colored or fluorescent red-orange or fluorescent yellow-orange colored vest and shall be equipped with a highly visible, reflectorized "Stop-Slow" hand sign conforming to current standards for daylight use; and with illuminated stand area, of high visibility for night use.

Work within the railroad right-of-way may require rail flaggers. Work within a rail zone as specified by the rail operator requires rail flaggers. Check with each operator prior to construction within railroad right-of-way.

202.03.05 Dust Control

Contractor shall be responsible for maintaining adequate dust control during and after construction and prior to acceptance by the City. The Contractor shall apply a fine spray of water or other approved dust palliative to unpaved surfaces. Paved surfaces may be broomed with power brooms (i.e., street sweepers) to control dust.

203 CLEARING AND GRUBBING

203.01 DESCRIPTION

This section covers work necessary to clear, remove, and dispose of all debris and vegetation such as stumps, trees, logs, roots, shrubs, vines, grass, and weeds within the designated limits, to preserve from injury or defacement such objects and vegetation as are designated to remain in place, and to perform final clean-up of the designated area.

Clearing is defined as cutting of trees, bushes, vines, and other vegetative growth at or above ground surface and removal from the site of all such cut or down vegetation. Tree removal shall only be as designated by approved plans or permit.

Grubbing shall consist of the elimination of wooden and vegetative matter occurring at or below ground surface including, but not limited to, stumps, trunks, roots, canes, stems, debris remaining from clearing work, and sticks having a diameter of one inch or more.

Review with the City Engineer the location, limits, and methods to be used prior to commencing work under this section.

Removal of man-made structures, including, but not limited to, concrete slabs, walls, vaults, footings, asphaltic surfaced areas, and graveled areas, shall be included in payment for excavation or excavation and backfill as provided in Subsection 204.03.04 (Excavation of Existing Improvements and Miscellaneous) and will not be included in Clearing and Grubbing.

As indicated in Subsection 105.08 (Protection of Property) occupants of buildings adjacent to the work shall have salvage rights to plants, trees, shrubs, fences, and other improvements in the right-of-way. Contractor shall notify adjacent property owners. Contractor does not assume ownership of clearing and grubbing items until after fulfilling the requirements of Subsection 105.08 (Protection of Property) and Subsection 203.03.02 (Timber Salvage).

203.02 MATERIALS

Explosives used for clearing and/or grubbing shall be fresh, stable material manufactured to the standards of the "Institute of Makers of Explosives," and shall conform to the applicable requirements of ORS Chapter 476 and 480. City Engineer must grant permission to use explosives.

203.03 CONSTRUCTION

203.03.01 General

Obtain the required permits as specified in Subsection 105.08 (Protection of Property) and perform clearing work in conformance thereto.

Remove trees and plants as designated by approved plans or permits within the area of work, and remove all sod, topsoil, and organic earth within designated areas.

Remove and stockpile as directed, all topsoil that is free of roots, rocks, and other objectionable material and is determined by the City Engineer to be suitable for future use. Take reasonable care to prevent topsoil from becoming mixed with subsoil. Contractor shall provide imported topsoil per Subsection 206.02.04 (Topsoil) at its sole expense if existing topsoil is not adequately segregated as determined by the City Engineer.

203.03.02 Timber Salvage

A. Trees in Street Right-of-Way

The adjacent property owner shall have the right to any trees felled in the right-of-way adjacent to owner's property. Contractor shall notify adjacent property owners by mail or door hanger at least 48 hours prior to felling trees. Trees shall be stacked and decked on

owner's property or removed from the construction site if the owner does not reserve the right of ownership.

B. Trees on City-Owned Property

City reserves the right to merchant timber as designated in the contract documents and as marked at the project site by the City Engineer. Assume ownership, remove, and dispose of all other timber. Cut, trim, and handle marked merchantable timber in such a manner as to ensure the best sale value to City and dispose of resulting waste materials as hereinafter specified.

203.03.03 Protection of Existing Vegetation

Protect all trees, shrubbery, and other vegetation, not designated for removal, from damage caused by the work. Cut and remove trees and branches only where approved. When directed, remove branches other than those required to provide a balanced appearance of any tree. Contractor will provide adequate protection for trees, shrubbery, and other vegetation adjacent to the work area which are to remain, as indicated on the plans. No roots projecting into the excavation will be cut except in the presence of the City Inspector. All roots authorized to be cut will be cut neatly, with a sharp tool to avoid torn root endings. Remove branches only as directed by the City Inspector.

203.03.04 Clearing

Clear the area above the natural ground surface of all vegetation and objectionable materials. Cut timber and timber growth so that no stump extends above ground surface more than 6 inches. Prune all limbs over paved streets to an elevation 14 feet above the pavement on arterial and collector streets, and 11 feet above the pavement on residential streets. Prune all limbs over sidewalks to an elevation 7 feet, 6 inches above the sidewalk. All such pruning shall be done in accordance with accepted arboricultural standards, and shall be approved by the City Engineer.

203.03.05 Clearing Borrow and Waste Disposal Areas

Clear areas designated as borrow and waste disposal areas to designated limits and dispose of all waste as herein specified.

203.03.06 Grubbing and Stripping

Completely remove all stumps and roots within the limits of required excavations and fill areas. No stumps or portion thereof shall come within 3 feet of fill subgrades or slope surfaces. Use of explosives for stump removal shall conform to requirements of Subsection 203.02 (Materials). Obtain any and all permits required for use of explosives from City.

On areas to be occupied by fills, remove all grass, roots, and embedded wood to a depth not less than 3 feet below subgrade or slope surface on which the fill is to be constructed.

On excavation areas, remove all roots and embedded wood to a depth not less than 1 foot below subgrade or slope surface through which excavation is required.

203.03.07 Disposal of Waste Material

Remove and dispose of all waste material or debris from the site. Obtain all necessary permits for disposing of waste materials. Copies of such permits shall be provided the City Engineer prior to disposal.

203.03.08 Backfilling and Clean-up

In areas not subject to future excavations or filling, fill all holes and depressions caused by clearing and grubbing with material acceptable to the City Engineer and reshape area to drain properly and to conform to adjacent undisturbed topography.

Leave work area in a clean and sightly condition, free from litter and debris.

203.03.09 Removal and Replacement of Signs, Mailboxes, Posts, etc.

Contractor will be responsible for the removal and replacement of all signs, mailboxes, posts, etc. when not specifically designated otherwise by the City Engineer. Contractor to contact property owner prior to removal and reinstallation of mailbox. Mail boxes in work area may need to be temporarily moved to allow clearing and excavation as well as easy access by mailman and residents. Upon completion of excavation, mailboxes shall be permanently replaced behind curb to postal service regulations.

204 EXCAVATION, EMBANKMENT, BEDDING, AND BACKFILL

204.01 DESCRIPTION

204.01.01 General

This section covers work necessary for excavation, construction of embankment, foundation stabilization, pipe bedding, pipe zone backfill, trench backfill, and disposal of material required in construction of streets, sewers, water mains, storm drains, structures, and appurtenances thereto.

204.01.02 Unclassified Excavation

Unclassified excavation is defined as all excavation, regardless of type, nature, or condition of materials encountered unless separately designated. The Contractor shall assume full responsibility to estimate the kind and extent of various materials to be encountered in order to accomplish the work.

204.01.03 Rock Excavation

Rock excavation is defined as the removal of all material which by actual demonstration cannot, in the City Engineer's judgment, be reasonably excavated with equipment comparable to types listed in Table 1 and equipped with rippers or similar approved equipment and which is, in fact, systematically drilled and blasted or broken by power-operated tools designed for rock excavation. The City Engineer may waive the demonstration if material encountered is well-defined rock. The term "rock excavation" shall be understood to indicate a method of removal and not a geological formation.

TABLE 1

Manufacturer	Model	Minimum Net Horse Power	Type of Excavation
Caterpillar	225	125	Trench
John Deere	690	125	Trench
Case	125B/980B	125	Trench
Caterpillar	D8	300	Grading and Structural

In trenches, boulders, or pieces of concrete below grade larger than ½ cubic yard will be classified as rock if drilling and blasting or other approved methods are actually used for their removal from the trench. If material which would be classified as rock by the above definition is mechanically removed without blasting, breaking, or splitting, it will be considered unclassified excavation and will be paid for as such at the unit price bid, or if larger equipment is specifically brought in for the sole purpose of rock removal, as defined above, then such removal will be considered rock excavation and will be paid for as such at the unit price bid.

204.01.04 Trench Excavation

Trench Excavation is defined as removal of all material encountered in the trench to the depths and widths as shown and, unless otherwise classified by the City Engineer, shall be considered unclassified or rock excavation.

204.01.05 Embankment

Embankment is defined as furnishing, placing, and compacting embankment materials to the depth and configuration as shown.

204.01.06 Foundation Stabilization

Foundation stabilization is defined as the removal of unsuitable material in the bottom of an excavation as directed by the City Engineer and replacement with specified material for support of a roadbed, pipe, main, conduit, structure, or appurtenances thereto.

204.01.07 Pipe Zone

Pipe zone is defined as the full width of the trench from 6 inches below outside of the pipe barrel to a point 6 inches above the top outside surface of the pipe barrel as shown on the appropriate Standard Drawing.

204.01.08 Trench Backfill

Trench backfill is defined as furnishing, placing, and compacting backfill material in the trench between the top of the pipe zone and the bottom of the pavement base or ground surface. Trench backfill will be classified as either native or select backfill.

204.02 MATERIALS

204.02.01 Embankment Materials

Provide embankment materials of approved earth, sand, bank-run, or river-run gravel or combinations thereof, which can be compacted to the densities specified free of peat, humus, muck, frozen ground, organic matter, or other materials detrimental to construction of firm, dense, and sound embankments.

204.02.02 Foundation Stabilization

Use foundation stabilization consisting of gravel or crushed aggregate ranging in size from 6-inch minus to ¾-inch minus as specified. Material shall be well graded from coarse to fine, and free from excessive clay or organic material.

204.02.03 Pipe Zone Material

Use pipe zone material consisting of ¾"-0" crushed aggregate or as noted on the plans or in the special provisions.

Pipe zone material shall be as specified for crushed aggregate material in Subsection 204.02.05 (Class B Backfill, Crushed Aggregate [¾”-0 or as specified]).

204.02.04 Class A Backfill, Native Backfill Material

Use native material excavated from within limits of the project that can be compacted to the density specified and free from vegetation and other deleterious material containing no frozen ground.

Maximum particle size shall be as shown, except for trench backfill, wherein the particle size shall not exceed 6 inches in diameter.

204.02.05 Class B Backfill, Crushed Aggregate (¾"-0 or as specified)

Coarse and fine aggregates shall conform to requirements of Section 205 (Materials—Types and Use) and to additional requirements contained herein.

Crushed aggregates to be incorporated in the work shall have a sand equivalent of not less than 35 when tested in conformance with AASHTO T 176. Crushed aggregate shall meet the requirements for Liquid Limit and Plasticity Index of Subsection 205.02.12.C (Fine Aggregate [Sand]).

The crushed aggregates shall be uniformly graded from coarse to fine and shall conform to one or another of the following grading requirements as specified.

SIEVE SIZE	Percentages (by weight)				
	Separated Sizes				
	2½"-0	2"-0	1½"-0	1"-0	¾"-0
3"	100				
2½"	95-100	100			
2"		95-100	100		
1½"			95-100	100	
1¼"	55-75				
1"		55-75		90-100	100
¾"			55-75		90-100
½"				55-75	
⅜"					55-75
¼"*	30-45	30-45	35-50	40-55	40-60

*Of the fraction passing the ¼-inch sieve, 40% to 60% shall pass the no. 10 sieve.

For determination of sizes and grading conform to AASHTO T 27.

Where 1"-0 base aggregate is approved for use, at least 70% (by weight) of the material passing through the ¼" sieve but retained on the No. 10 sieve shall have at least 1 mechanically fractured face.

Crushed aggregate will be sampled for acceptance at 1 or more of the following times as determined by the City Engineer.

1. In its final state on the roadbed after all processing and prior to the placement of subsequent surfacing materials;
2. In the stockpile after all shaping work has been completed; or,
3. Immediately after crushing.

For trench backfill, the maximum particle size shall not exceed 1½" in pipe zone.

204.02.06 Class C Backfill, Clean Sand

Class C backfill shall be clean sand with no particle size greater than ¼ inch.

204.02.07 Class D Backfill, Pit or Bar-Run Material

Pit or bar-run material shall be well graded from coarse to fine free from roots, clay balls, organic material and debris. Maximum size of material shall be 6 inches. No more than 5% by weight shall pass the No. 200 sieve. The material shall have a minimum uniformity coefficient of 8, and a minimum permeability coefficient of 10-3 cm/sec.

204.02.08 Class E Backfill, Controlled Density Fill

Controlled Density Fill (CDF) shall be a mixture of Portland Cement, fly ash, aggregates, water and admixtures proportioned to provide a nonsegregating, self-consolidating, free-flowing and excavatable material that will result in a hardened, dense, nonsettling fill. CDF shall conform to the requirements of Section 205 (Materials—Types And Use). CDF 150-400 PSI.

204.02.09 Imported Topsoil

Unless specified otherwise, imported topsoil shall be used. Provide natural, fertile, friable topsoil, representative of local productive soil, and 90% free of clay lumps or other foreign matter larger than 2-inch diameter, not frozen or muddy, with pH 5.0 to 7.0, and not less than 3% humus as determined by loss on ignition of moisture-free samples dried at 100 degrees C. Gravel portion (particles larger than 2 mm) shall not exceed 15% of total volume. Imported topsoil shall be free of quack grass, horsetail, and other noxious vegetation and their seeds. Should such regenerative material be present in the soil all resultant growth, both surface and root, shall be removed and replaced to original specifications at the Contractor's expense within 2 years of acceptance of the work.

204.02.10 Native Topsoil

When specified, use topsoil from the site, properly stored and protected and free from grass, debris, overburden and roots, sticks, hard clay, and stones which will not pass a 1-inch square opening.

204.02.11 Water

Use water that conforms to requirements of Section 205 (Materials—Types And Use). Provide water at the Contractor's sole expense. Contractor shall obtain City water as designated by the City. Whenever City water is to be used, the Contractor shall obtain a meter and backflow assembly issued by the City. There is a deposit required for this assembly.

204.02.12 Explosives

Use of explosives only with permission from City Engineer. Use explosives which are fresh, stable materials manufactured to the standards of the "Institute of Makers of Explosives," and conforming to applicable requirements of ORS Chapters 476 and 480.

204.03 CONSTRUCTION

204.03.01 Excavation

Excavate, remove, and dispose of all formations and materials, natural or man-made, irrespective of nature or conditions, encountered within limits hereinafter defined or as specified, necessary for construction of the project. Method of excavation used is optional. Overbreak shall be removed at the Contractor's expense. Use hand methods for excavation that cannot be accomplished without endangering existing or new structures or other facilities.

Furnishing, installing, and removal of all shoring, sheeting, and bracing as required to support adjacent earth banks and structures, and for the safety of the public and of all personnel working in the excavation shall be the Contractor's responsibility and shall be considered incidental to the construction.

204.03.02 Rock Excavation and Explosives

A. Depth of Excavation

Excavate to the depths designated or as shown on the appropriate plan or standard drawing. Correct over-excavation with compacted material as directed at no additional expense to City. In trenches for sewers, and water mains or conduits, remove all material

necessary to provide a minimum clearance of 6 inches under the pipe and replace with bedding material in conformance with Subsection 204.02.03 (Pipe Zone Material).

B. Methods and Records Required

Before rock removal by systematic drilling and blasting or other methods will be permitted, notify the City Engineer who, with Contractor or its representative, will determine the amount of material to be removed as rock excavation and will record the information. Then drill, blast, or break with power-operated tools specially designed for rock excavation, and excavate the material.

C. Use of Explosives

Obtain any and all permits required for use of explosives required by the City.

Use of explosives shall be avoided as far as practicable, and in no case shall tunnel blasting methods be used. Such blasting as must be done shall be controlled in a manner, which will avoid possible shattering or loosening of materials back of lines to which the excavations are to be made. All blasting shall be supervised and/or done by a State-certified powder person. Contractor shall be responsible for any and all damages to property or injury to persons resulting from blasting, or accidental or premature explosions that may occur in connection with the use of explosives. Give adequate warning to all affected persons and adjacent property owners prior to blasting.

Where excavations in hard, solid rock are to be made to depths of 10 feet or more, blasting thereof shall be done by the presplitting or preshearing method unless other methods are approved by the City Engineer.

D. Trench Blasting

When blasting rock in trenches, cover area to be shot with blasting mats or other approved type of protective material that will prevent scattering of rock fragments outside of the excavation.

204.03.03 Preservation of Existing Improvements

Conduct operations in such a manner that existing streets, utilities, railroad tracks, structures, and other facilities, which are to remain in place, will not be damaged, as specified in Section 105 (Control of Work). Furnish and install cribbing and shoring, or whatever means are necessary to support material carrying existing facilities, or to support the facilities themselves, and maintain such supports until no longer needed.

Protect temporary facilities, until they are no longer required, and remove and dispose of temporary supports and other protective means when they are no longer required.

204.03.04 Excavation of Existing Improvements and Miscellaneous

Unless otherwise specifically provided for, excavation or excavation and backfill includes all excavating, removing, hauling, and depositing, including but not limited to, existing pavements, walks, driveways, surfaces, slabs, curbs, gutters, and similar cement concrete structures, bituminous materials, all rock or gravel road surfacing materials, abandoned sewers, pipes and conduits, logs, piling, footings, foundations, vaults, and chambers, when such materials are within the limits of excavation.

Remove remaining ends of abandoned pipes, or portions of other items partially removed under this work, which would be left exposed after final excavation, to a minimum of 1 foot below the finished grade or elevation. Plug or seal ends of abandoned pipes in backfill or embankment areas. Storm drainpipe shall be reconnected as directed by the City Engineer.

Payment for all work in this section and repair of any damage will be considered incidental to the work and included under bid items for Excavation, Excavation and Backfill, or other specified earthwork items.

204.03.05 Limits of Excavation

Excavate to the depths and widths designated, allowing for forms, shoring, working space, base material, and finish topsoil where required. Do not excavate deeper than elevation shown. Excavation carried below grade lines shown or established without approval shall be replaced with compacted foundation stabilization material at the Contractor's expense. Over-excavation under footings shall be filled with concrete of a strength equal to that of the footing, and cuts below grade shall be corrected by similarly cutting adjoining areas and creating a smooth transition, all at the Contractor's expense. When the precise location of subsurface structures is unknown, locate such structures by hand excavation prior to utilizing mechanical excavation equipment.

204.03.06 Slope Grading

Make slopes free of all exposed roots, unstable rock, and loose stones exceeding 3 inches in any dimension. Shape tops of banks to circular curves with, in general, not less than a 6-foot radius, unless rock makes such work impractical. All surfaces shall be neatly and smoothly trimmed.

204.03.07 Foundation Stabilization

If, in the judgment of the City Engineer, material in the bottom of an excavation is unsuitable for supporting foundations, piers, retaining walls, cribbing, sewers, pipes, or similar facilities, over-excavate as directed and backfill to required grade with thoroughly compacted foundation stabilization material conforming to Subsection 204.02.02, Foundation Stabilization.

204.03.08 Disposal of Excess Material

Excavated materials not suitable or not required for backfill or embankment shall be deposited at predesignated sites specified or sites supplied by the Contractor. A permit may be necessary within the City of Milwaukie for embankments exceeding 50 cubic yards or before the Contractor places excavated material from City projects on any property. The Contractor shall make all arrangements for disposal of excess material, obtain the necessary permits when not provided by the City at predesignated sites, and bear all cost or retain any profit incidental to such disposal.

204.03.09 Temporary Location of Excavated Materials

Place excavated material, specified for embankment or backfills and not excess material, only within the construction easement, right-of-way, or specified working area. Pile in such a manner that it will cause a minimum of inconvenience to the public. Furnish the City Engineer a copy of written approval from each property owner prior to stockpiling material on private property outside of easements. Conform to all federal, State, and local codes governing the safe loading of trenches with excavated material.

Provide free access to all fire hydrants, water valves, and meters, and leave clearance to enable free flow of storm water in all gutters, conduits, and natural watercourses.

204.03.10 Surface Removal and Replacement for Trenches

A. Removal and Replacement of Topsoil

When specified and where trenches within easements cross lawns, garden areas, pasture lands, cultivated fields, or other areas on which topsoil conditions exist, remove all topsoil to a depth of at least 12 inches for the full width of the trench to be excavated. Stockpile topsoil to one side of the easement in a location and do not mix with remaining excavated material. Replace and compact removed topsoil in the top of backfilled trench to the depth removed.

Maintain finished grade of topsoil level with area adjacent to the trench until final acceptance by the City Engineer. Repair damage to adjacent topsoil caused by work operations. Remove all rock, gravel, clay, and any other foreign materials from surface; regrade, and add topsoil as required.

In lieu of stockpiling topsoil, imported topsoil as defined in Subsection 204.02.06 (Class C Backfill, Clean Sand) may be substituted and replaced to the actual depth removed at the Contractor's expense. If, in the opinion of the City Engineer, the Contractor does not take precautions to protect the stockpiled topsoil from contamination by rocks, clay, excess water, etc., the Contractor will import topsoil meeting the requirements of Subsection 204.02.06 (Class C Backfill, Clean Sand) at their own expense.

Payment for removing, stockpiling, and replacing topsoil in the trench is included in the bid item, Trench Excavation and Backfill.

B. Removal of Pavement, Curbs, Driveways, and Sidewalks

Cut or grind all asphalt pavement to full depth with a pavement saw or other suitable pavement cutter or grinder prior to excavation of trenches.

Saw Portland Cement concrete pavement, curbs, and sidewalks to a minimum depth of 4 inches or half the concrete thickness, whichever is greater. Subsequent removal may be accomplished by using a jackhammer. Full depth cut by pavement saw can be done at the option of the Contractor. Use of any machine utilizing a falling or swinging weight in the form of a "headache ball" will not be permitted.

Width of cut shall be as shown on the plans or standard drawings. Remove all loose, undermined or damaged pavement. Remove all pavement between the trench and curb, pavement edge or construction joint whenever the cut is 3 feet or less from the curb, pavement edge, or construction joint. Prior to paving, all loose, cracked, sunken or otherwise damaged edges will be saw cut in continuous straight cuts. Straight line saw cut lengths will not be less than 50 feet. Cut angles will not exceed 15 degrees.

Pavement and concrete materials removed shall be hauled from the site and not used for trench backfill. Replacement of pavement, curb, and sidewalk shall conform to the requirements of Section 209 (Resurfacing). 6” T-cuts may be required at City’s discretion.

204.03.11 Trench Excavation and Shoring

A. Maximum Length of Open Trench

Length of trench excavated in advance of the pipe laying shall be kept to a minimum, and in no case shall it exceed 200 feet unless otherwise authorized. The length of un-restored work area and total unfinished trench construction shall not exceed a length of 800 feet, for each main line pipe laying operation unless otherwise authorized. Trench construction will not be considered completed until all restoration is completed. If the unfinished trench or restoration exceeds 800 feet in length, the main line construction shall be suspended and shall not be resumed until authorized by the City Engineer.

In no case will any trench be left unfinished or uncovered overnight or outside working hours.

A section of trench shall be considered as unfinished until excavation, construction, backfilling, compaction, gravel road restoration, Portland Cement concrete pavement, minimum of first lift of asphaltic concrete pavement or cold patch, and cleanup operations have been completed. Cleanup of backfilled and construction area shall include resurfacing and cleaning of area so as to allow use of trench and adjacent construction area for normal use as required in Section 207 (Restoration and Cleanup).

B. Trench Width

The maximum trench width at the ground surface will be kept to a minimum necessary to install the pipe in a safe manner. Trenches shall be of sufficient width to allow for shoring and permit proper joining of pipe and compaction of the backfill material along the sides of the pipe. Minimum trench width of unsheeted trenches shall provide a clear working space of at least 6 inches on each side of the outside diameter of the pipe bell. Sheeting requirements shall be independent of trench widths.

Trench width at the top of the pipe will be the pipe ID plus 18 inches, except where specifically shown on the Drawings, or specified in the Special Specifications. The pipe will be centered in the trench on line and grade at all times. When authorized by the City Engineer, the Contractor may use pipe of greater strength or install a superior pipe bedding in lieu of maintaining the trench widths shown. If maximum width shown is exceeded by Contractor (without written authorization), the Contractor shall provide pipe of a higher strength designation, a higher class of bedding, or both, as approved by the City Engineer, at no expense to the City.

Make the excavation for manholes and other structures wide enough to provide a minimum of 12 inches between sides of structure and sides of excavation.

Confine top width of trench to dedicated rights-of-way or construction easements. Special written agreements to extend width may be made by the Contractor with affected property owners, provided such agreements are approved by the City Engineer.

C. Grade

Excavate trench to lines and grades shown or as established by the City Engineer, with proper allowance for pipe thickness, pipe bedding, and foundation stabilization. The subgrade upon which bedding is to be placed shall be firm, undisturbed, and true to grade. If the trench is over-excavated, restore to grade with thoroughly compacted foundation stabilization material or pipe bedding material at the Contractor's expense. Place material over full width of the trench in compacted layers to established grade with allowance for pipe bedding.

D. Shoring, Sheeting, and Bracing of Trenches

Sheet and brace trench when necessary to prevent caving and to protect adjacent structures, property, workers, and the public. Increase trench widths by the thickness of the sheet and maintain sheeting until pipe has been placed and backfilled at the pipe zone. Remove shoring and sheeting as backfilling is done, in a manner that will not damage the pipe or permit voids in the backfill. All sheeting, shoring, and bracing of trenches shall conform to the safety requirements of the federal, State, or local agency having jurisdiction. The most stringent of these requirements shall apply.

204.03.12 Dewatering

Furnish, install, and operate all necessary machinery, appliances, and equipment to keep excavations free from water during construction. Remove and dispose of all water entering the trench excavation continuously during the time the trench is being prepared for the pipe laying, during the pipe laying, when concrete is being placed, and until the backfill has been completed. Dewater and dispose of water so as to prevent injury to public or private property, or nuisance or menace to the public. Drainage of trench water through the pipeline under construction is prohibited unless otherwise approved by the City Engineer. At all times have on hand sufficient pumping equipment and machinery in good working condition for all ordinary emergencies, including power outage. Have available at all times competent workers for operation of the pumping equipment. Control surface runoff to prevent entry or collection of water in excavations.

Control ground water such that softening of the bottom of excavations or formation of "quick" conditions or "boils" during excavation shall be prevented. Design and operate dewatering

systems so as to prevent removal of natural soils and so that ground water level outside the excavation is not reduced to the extent that would damage or endanger adjacent structures or property.

Before dewatering is started, submit to the City Engineer a statement of the method, installation, and details of the dewatering system proposed to be used. Open and cased sumps shall not be used as primary dewatering for excavations deeper than 3 feet below static water table.

Release ground water to its static level in such a manner as to maintain the undisturbed state of natural foundation soils. Prevent disturbance of compacted backfill and flotation or movement of structures, water mains, sewers, and other utilities. Dispose of water according to environmental laws.

Dewatering shall be considered as incidental to, and all costs included in, the various contract pay items in the Proposal.

204.03.13 Compaction

Compaction shall be by mechanical methods only.

Compaction equipment shall be of suitable type and adequate to obtain the amount of compaction specified. Compaction equipment shall be operated in strict accordance with the manufacturer's instructions and recommendations and shall be maintained in such condition that it will deliver the manufacturer's rated compactive effort. Compaction equipment for granular materials shall be vibratory plate or vibratory drum compactors.

Any settlement noted in backfill, embankment, or in structures built over the backfill or embankment within the 18-month warranty period in accordance with Division 1, General Requirements, will be considered to be caused by improper compaction methods and shall be corrected at the Contractor's expense. Structures damaged by settlement shall be restored to their original condition by the Contractor at the Contractor's expense.

204.03.14 Embankment

A. Roadway Embankment

1. Preparation of Embankment Foundations

Prior to construction of embankments, excavate and dispose of unstable material or unsuitable foundation material. Limit excavation to lines, grades, and cross sections shown. Backfill basements, trenches, and holes which occur within embankment limits with specified material. Compact natural ground underlying embankments to the depth of grubbing or a minimum of 12 inches to density specified for the embankment material to be placed.

2. Embankment Construction

Construct embankments to the lines and grades shown. Place material in continuous horizontal layers with compacted material not exceeding 6” lifts. Compact each lift to at least 95% of maximum dry density as determined by ASTM D1557/AASHTO T-180 and to where it will show no appreciable deflection or adverse reaction under the compacting equipment during compaction.

If the surface of the prepared foundation or the compacted surface of a preceding lift is too dry or smooth to bond properly with the next layer of material, moisten or scarify, or both, before the next layer of material is placed. Compact slopes of all embankments thoroughly, and true to line and grade.

Do not place embankment material when the material, foundation, or previously placed embankment material is frozen. Embankment material shall not be placed

in final position until moisture in excess of optimum moisture has been removed. Water settling of embankments will not be permitted.

B. Pipeline Embankment

Where pipelines are to be placed within an embankment, construct the embankment to its final specified elevation prior to trench excavation for the pipeline. Place pipe bedding and pipe zone materials in accordance with applicable portions of Subsection 204.03.16 (Pipe Zone Placement) and 204.03.17 (Trench Backfill and Compaction). Place trench backfill material as specified in Subsection 204.03.17 (Trench Backfill and Compaction).

1. Additional Pipe Cover

In locations where insufficient pipe cover exists, place excess excavated trench material suitable for embankment over the pipe to provide a minimum cover of 3 feet. Compact as required for underlying trench backfill.

C. Embankment for Structural Foundations

Deposit specified materials free from roots, organic material, trash, and stones larger than 3-inch diameter in uniform lifts across the full width of the embankment. Compact each lift to 95% of maximum dry density as determined by ASTM D 1557/AASHTO T180.

204.03.15 Pipe or Conduit Pipe Zone Bedding

Construct bedding in conformance with the appropriate Standard Drawing.

Pipe zone bedding consists of leveling the bottom of the trench or top of the foundation material and placing pipe bedding select material to the horizontal centerline (spring line) of the pipe. Bedding select material shall be placed in at least 2 lifts. Place the first lift to provide the minimum depth of bedding select material shown on the appropriate Standard Drawing before the pipe is installed. Spread smoothly to proper grade so that pipe is uniformly supported along the barrel. Excavate bell holes at each joint to permit proper assembly and inspection of the entire joint. Bedding under pipe shall provide a firm, unyielding support along the entire pipe length. Place subsequent lifts of not more than 6 inches thickness up to the horizontal centerline of the pipe. Bring lifts up together on both sides of the pipe and carefully work under pipe haunches.

Pipe zone bedding shall be considered to include full width of excavated trench from the bottom of the trench or top of the foundation stabilization material to the top of the bedding.

Particular attention must be given to the area from the invert to the horizontal centerline of the pipe or top of the bedding to ensure that firm support is obtained to prevent any lateral movement of the pipe during the final backfilling of the pipe zone.

204.03.16 Pipe Zone Placement

Place pipe zone material carefully around the pipe in 6-inch layers and compact to a minimum of 90% maximum dry density as determined by ASTM D1557/AASHTO T-180. Pipe zone material for water pipe shall be compacted to a minimum of 95% of maximum dry density as determined by ASTM D 1557/AASHTO 180. Prevent pipe from movement either horizontally or vertically during placement and compaction of pipe zone material.

204.03.17 Trench Backfill and Compaction

A. General

The right is reserved to modify the use, location, and quantities of the type of backfill during construction as the City Engineer considers to be in the best interest of the City.

Class A Backfill will, generally be limited to use in unsurfaced or unimproved areas.

Class B Backfill will, typically, be required for backfill in new roadways (except arterials where Class E is required) under construction, future roadways, gravel roadways or pedestrian and bicycle pathways.

Class C Backfill will, typically, not be allowed.

Class D Backfill will, typically, not be allowed.

Class E Backfill (CDF) shall be required in existing paved streets, arterial roadways, collectors and roadways where subsequent trench settlement must be held to a minimum.

The City Engineer may sample excavated material to determine suitability of the Class A material for use as backfill. The Contractor shall take reasonable precautions to prevent excavated material from becoming saturated beyond the critical moisture limits and replace any saturated Class A material with Class B, C, D or E material as specified, at no additional expense to City.

B. Class A, B, C, or D Backfill

The Contractor shall backfill the trench above the pipe zone in successive lifts. Backfill shall not be allowed to free-fall into the trench until at least 3 feet of cover is provided over the top of the pipe. The method of compaction shall be modified as necessary to protect the pipe.

The Contractor shall compact each lift to a minimum of 95% of the maximum dry density as determined by ASTM D1557/AASHTO T-180. If the specified compaction is not obtained, the Contractor may be required to use a modified compaction procedure and/or reduce the thickness of the lifts. If approved materials meeting the specifications cannot be compacted to the required density regardless of the compactive effort or method, the City Engineer may reduce the required density or direct that alternate materials be used. In no case shall excavation and pipe laying operations proceed until the Contractor is able to compact the backfill to the satisfaction of the City Engineer.

When the backfilling is complete, the Contractor shall finish the surface area as specified. In paved or graveled areas the Contractor shall maintain the surface of the trench backfill level with the existing grade with ¾" –0 crushed aggregate material, or asphalt concrete, if directed, until final pavement replacement is completed and accepted by City.

C. Controlled Density Fill

Backfill the trench above the pipe zone with CDF material. If the CDF is to be used as a temporary surfacing, backfill the CDF to the top of the trench and strike it off to provide a smooth surface. If the CDF is not to be used as temporary surfacing, backfill the CDF up to the bottom of the proposed resurfacing. No compaction of CDF is allowed. The CDF shall be steel-plated to protect it from traffic for a minimum of 24 hours. After 24 hours, the CDF may be paved, or opened to traffic until permanent surface restoration is completed, if it has hardened sufficiently to prevent rutting.

D. Compaction Testing

The Contractor shall provide compaction testing for all projects unless specifically stated otherwise in the contract documents. Sampling and testing of materials for determination of compliance with the specified compaction requirements may be taken at any location and time as the City Engineer may determine. Excavate test pits in the backfill as directed by the City Engineer for the purpose of testing the backfill compaction. At the option of the City Engineer, density tests may be taken on a lift of compacted backfill immediately before placing the next lift. All costs in connection with excavating test pits, providing and installing safety shoring as required to protect the testing person, and

standby time during field density test shall be considered incidental to backfill and shall be included in unit prices bid for the various items involved.

When compaction testing has been performed by the City Engineer and the required density has not been obtained by the Contractor, the Contractor shall bear all costs for all subsequent retesting in the areas of noncompliance. All testing shall be performed by the testing laboratory of the City Engineer. The City Engineer shall keep an accurate account of the time spent for the testing laboratory to perform retesting. The Contractor shall be totally responsible for rescheduling compaction testing with the City Engineer. Any and all tests associated with delays due to retesting shall be the sole responsibility of the Contractor.

If required density has not been obtained, remove the backfill from the trench, replace with backfill, and recompact as many times as it is necessary to obtain the required specified minimum densities.

E. Trench Maintenance

In graveled areas, maintain surface of the backfilled trench level with the adjacent and existing grade, before and after the area is opened to traffic, with 1-inch minus crushed aggregate material. In paved areas, cold mix asphalt pavement shall be used until the final pavement replacement is completed. The cold mix asphalt or steel plating shall be in place at the end of each workday.

Place cold mix asphalt in conformance with Section 209 (Resurfacing).

Maintain backfilled trench surface between any 2 successive manholes until the following operations have been completed and accepted by the City Engineer.

1. Service connections installed, backfilled, and compacted.
2. Construction of manholes and appurtenances.
3. Air testing.
4. Cleanup and restoration of all physical features, including concrete curbs, gutters, and driveways.
5. Utilities restored to their original condition or better.
6. All work required between the 2 manholes accomplished.

Maintain backfilled trench surface between any 2 successive valves until the following operations have been completed and accepted by the City Engineer.

1. Service connections installed, backfilled, and compacted.
2. Valves, valve boxes, and hydrants installed.
3. Hydrostatic testing.
4. Flushing and disinfection.
5. Cleanup and restoration of all physical features, including concrete curbs, gutters, and driveways.
6. Utilities restored to their original condition or better.
7. All work required between the two valves accomplished.

Do not undertake final pavement replacement until all items outlined above have been completed and accepted.

Maintenance of backfilled trenches is considered as incidental to this item of work, and payment for such maintenance will be considered as included in payment for Excavation and Backfill.

205 MATERIALS—TYPES AND USE

205.01 DESCRIPTION

This section covers certain types of materials and their use that are common to appropriate forms of construction contained throughout Divisions 3 through 6.

205.02 MATERIALS

205.02.01 General

Unless specified otherwise in the contract documents or standard drawings, materials contained herein will be used in required work.

205.02.02 Portland Cement Concrete

Use concrete having a 28 day design strength of 3,300 PSI for curbs, sidewalks, and poured in place manholes and catch basins, and 4,000 PSI for PCC pavement per AASHTO T-22 and T-23 with 1½ inch maximum size aggregate.

High early strength concrete (Type III cement) shall be used when patching trenches in Portland Cement concrete pavement.

Use Type II cement concrete for all sewer and water main construction and appurtenances thereto.

Portland Cement concrete shall be sampled and tested in accordance with the following ASTM test methods.

1.	Sampling Fresh Concrete	C172
2.	Obtaining Drilled Cores	C42
3.	Molding and Curing Specimens	C31
4.	Compressive Strength	C39
5.	Flexural Strength	C78
6.	Slump	C143
7.	Air Content	C173 or C231
8.	Unit Weight Yield	C138
9.	Setting of Mortar	C191 or C266

205.02.03 Cement Mortar

Use either standard premixed mortar conforming to ASTM C 387, or mortar proportioned with 1 part Portland Cement to 2 parts clean, well-graded sand which passes a ⅛-inch screen and which conforms to AASHTO M 45. Admixtures may be used, but do not exceed the following percentages of cement by weight: Hydrated lime - 10% and diatomaceous earth or other inert materials - 5%. Testing shall conform to the OSHD test for mortar strength.

205.02.04 Cement Grout

A. Type "A" Grout

Utilize grout which consists of 1 part Portland Cement, 3 parts of clean and well-graded sand. Use minimum amount of water to produce a thick, creamy consistency.

B. Type "B" Grout

Where type "B" grout is specified, use a mixture consisting of 1 part Portland Cement, 5 parts of clean and well-graded sand, and 7 parts pea gravel, by volume.

205.02.05 Steel Reinforcement

Use steel deformed bars conforming to ASTM A 615, Grade 40, except that longitudinal bars in continuously reinforced concrete pavement shall be Grade 60. See Section 702 (Reinforcement).

205.02.06 Dowels

Utilize steel dowels which conform to ASTM 702.02.04. Where specified, dowels shall be coated with plastic or other approved material for bond prevention. See Section 702 (Reinforcement).

205.02.07 Structural Joint Material

Use preformed and poured joint fillers conforming to requirements of Subsection 701.02.06 (Joint Materials). For joints in Portland Cement concrete pavement, curbs, gutters, driveways, sidewalks, and pathways, use 701.

205.02.08 Curing Materials for Portland Cement Concrete

Conform to 1 or more of the following requirements for curing materials; choice of method to be used is dependent on weather and existing conditions.

1.	White Burlap – Polyethylene Sheets	AASHTO M 171
2.	Waterproof Paler	AASHTO M 171
3.	White – Pigmented Liquid Membrane-Forming Compound*	AASHTO M 148
4.	White Polyethylene Film	AASHTO M 171
5.	Burlap Cloth (Jute or Kenaf)	AASHTO M 182

*Required for PCC curbs, but do not use on bridges or box culverts. Test in accordance with the OSHD modified procedure.

205.02.09 Epoxy Cement

Epoxy cement shall be a 2-compound epoxy resin adhesive conforming to requirements of AASHTO M 235.

205.02.10 Portland Cement

Furnish one or more of the following types as specified.

Type I: For general use when special properties of other type cements are not required.

Type IA: Air-entraining cement for same uses as Type I, where air-entrainment is desired.

Type II: For use when moderate sulfate resistance or moderate heat of hydration is desired.

Type IIA: Air-entraining cement for same uses as Type II, where air-entrainment is desired.

Type III: For use when high early strength is desired.

Type IIIA: Air-entraining cement for same use as Type III, where air-entrainment is desired.

Portland Cement shall conform to AASHTO M 85 for low alkali cement except as follows.

1. Total alkali content (sodium and potassium oxide calculated as $Na_2 0+0.658K_2 0$) shall not exceed 0.6%.
2. Types I, IA, III, or IIIA must contain a maximum of 10% tricalcium aluminate.
3. Time-of-setting tests shall be by either the Gillmore Test or the Vicat Test or both, as the City Engineer may elect.

When not otherwise specified, use Type I. Contractor, at their option, may use Type III Portland Cement (high early strength) in lieu of Type I in the identical quantity specified for the latter.

Differing brands or types of cement, or the same brand or type of cement from different plants shall not be mixed during use nor be used alternately. Cement may be sampled either at the plant or site of work at the option of the City Engineer.

205.02.11 Water

Water used in all work must be reasonably clean and free of oil, salt, acid, alkali, sugar, vegetable matter, or other substances injurious to the finished product. Use water conforming to AASHTO T 26 for mixing and curing Portland Cement concrete, mortar, or grout. Water of approved potable quality may be used without test.

205.02.12 Aggregates

A. Description

This work consists of furnishing and placing 1 or more courses of aggregates, as subbase or base, on an approved subgrade or subbase.

B. Materials

Crushed aggregates shall consist of crushed gravel or rock, including sand.

1. Fracture

Gravel shall have at least 1 fractured face on 50% of the material retained on each sieve size 1½ inch and above and 70% for the material passing the 1½-inch sieve and retained on each of the sieves down to ¼ inch.

2. Durability

The source material from which aggregate materials are obtained, produced or manufactured, shall meet the following qualifying test requirements.

Test	Test Method	Requirements
Degradation:		
Passing No. 20 sieve	OSHD TM 208	30% Max.
Sediment Height	OSHD TM 208	3” Max.
Abrasion:	OSHD TM 211	35% Max.

3. Sand Equivalent

Crushed aggregates to be incorporated in the work shall have a sand equivalent of not less than 35 when tested in conformance with OSHD TM 101.

4. Liquid Limit and Plasticity

Crushed aggregate shall meet the following requirements.

Liquid Limit Percent of Material Passing No. 40 Sieve	Plasticity Index (Maximum) OSHD TM 102	(Maximum) OSHD TM 103
0.0 to 5.0, inclusive	33	6
5.1 to 10.0, inclusive	30	5
10.1 to 15.0, inclusive	27	4
15.1 to 20.0, inclusive	24	3
20.1 to 25.0, inclusive	21	2
Over 25.0	21	0 or N.P.

5. Grading Requirements

Crushed aggregates shall conform to the following grading requirements.

Separated Sizes:	**2 ½" -0**	**2"-0**	**1 ½"-0**	**1"-0**	**¾"-0**
Sieve Size	**Percentages Passing (by weight)**				
3”	100				
2 ½”	95-100	100			
2”	-	95-100	100		
1 ½”	-	-	95-100	100	
1 ¼”	55-75	-	-	-	
1”	-	55-75	-	90-100	100
¾”	-	-	55-75	-	90-100
½”	-	-	-	55-75	-
⅜”	-	-	-	-	55-75
¼”	30-45	30-45	35-50	40-55	40-60
No. 10	12-27	12-27	14-30	16-33	16-36
No. 40	0-16	0-16	3-18	8-24	8-24
No. 200	0-9	0-9	0-8	0-8	0-10

The determination of sizes and gradings shall be in conformance with AASHTO T27.

6. Acceptance

Crushed aggregate will be sampled for acceptance at one or more of the following times as determined by the City Engineer.

1. In its final state on the roadbed after all processing and prior to the placement of subsequent surfacing materials;
2. In the stockpile after all shaping work has been completed; or,
3. Immediately after crushing.

C. Fine Aggregate (Sand)

Use fine aggregate consisting of finely crushed rock or gravel, fine sand, and other finely divided natural and inert mineral matter, thoroughly washed, and free of clay, loam, shale, alkali, vegetable matter, and other deleterious matter. Do not mix fine aggregate from different geological sources, and do not store in the same pile nor use alternately in the same class of construction or mix.

Portland Cement concrete shall contain fine aggregate which has a deleterious material content not exceeding the following limits.

1. Friable Particles 1% (by weight)
2. Lightweight Particles 1% (by weight)
3. Material Passing No. 200 Sieve 1% (by weight)

When this fine aggregate for Portland Cement concrete is subject to 5 alternations of the sodium sulfate soundness test (AASHTO T 104), weighted percentage of loss must not exceed 10% by weight.

Asphalt cement concrete and surface treatments shall contain fine aggregate having a weighted loss of not more than 15 mass percent when sodium sulfate is used or 20 mass percent when magnesium sulfate is used in 5 cycles of the soundness test. Total deleterious matter shall not exceed 2% by weight.

Use fine aggregates which meet the durability requirements for coarse aggregates contained hereinbefore, and which meet the following Liquid Limit and Plasticity Index requirements.

Quality	Test Method	Requirement
Liquid Limit	AASHTO T 89	NP or 33 Max.*
Plasticity Index	AASHTO T 90	NP or 6 Max.*

*When tested as specified, both the liquid limit and the plasticity index test results shall conform to the following.

Percent of Material Passing No. 40 Sieve	AASHTO T 89 Liquid Limit (Maximum)	AASHTO T 90 Plasticity Index (Maximum)
0.0 to 5.5, inclusive	33	6
5.1 to 10.0, inclusive	30	5
10.1 to 15.0, inclusive	27	4
15.1 to 20.0, inclusive	24	3
20.1 to 25.0, inclusive	21	2
Over 25.0	21	O or N.P.

Sampling and testing fine aggregate shall conform to the following methods.

1. Sampling AASHTO T 2
2. Material Passing No. 200 Sieve AASHTO T 11
3 Organic Impurities AASHTO T 21
4. Sieve Analysis AASHTO T 27
5. Mortar Strength ASTM C 109
6. Soundness AASHTO T 104
7. Friable Particles AASHTO T 112
8. Lightweight Pieces AASHTO T 113
9. Sand Equivalent AASHTO T 176

205.02.13 Asphalt Materials

A. General

Unless otherwise specified herein or in applicable subsections, types and grades of material shall conform to the current Oregon State Highway Division's "Specifications for Asphalt Materials" for Light Duty AC obtainable from the Pavement Services Engineer, ODOT, Salem, Oregon 97310.

B. Asphaltic Cement

Use PG 64-22 or PG 70-22 asphalt.

C. Tack Coat

Use CSS-1, CSS-1h, or CMS-25 emulsified asphalts.

D. Slurry Seal

Use CCS-1H cationic emulsified asphalts and crack sealing.

205.02.14 Controlled Density Fill

CDF shall attain unconfined compressive 28-day strengths of approximately 100 PSI.

Materials used in CDF mixture shall conform with the following.

1.	Portland Cement	Subsection 205.02.10
2.	Fly Ash	ASTM C618 (Class C or F) or ODOT 02010.10
3.	Aggregate	Subsection 205.02.12
4.	Water	Subsection 205.02.11
5.	Admixtures	ODOT 02040, AASHTO M-194, ASTM C 494, or ASTM C 260

205.02.15 Geotextiles

A. Description

Geotextiles will be accepted for use in various applications according to the provisions of this section.

B. Definitions

1. Geotextile

A fabric manufactured specifically for use in civil engineering applications. Fibers used in the manufacture of geotextiles consist of long chain synthetic polymers. At least 85% by weight of the long chain polymers are polyolephins, polyesters, or polyamides.

a. Drainage Geotextile

For installation in subsurface drains or other drainage locations.

b. Embankment Geotextile

For installation within or under embankments for stabilization.

c. Riprap Geotextile

For installation behind and beneath riprap, buttresses, inlays, shear keys, and erosion control applications.

d. Wall Geotextile

For construction of retained earth walls.

e. Subgrade Geotextile

For installation on subgrades and in other material separation applications.

f. Pavement Overlay Geotextile

For installation beneath an asphalt concrete overlay.

2. Machine Direction

The long, or warp, direction of the geotextile. The cross-machine, or fill, direction is perpendicular to the machine direction.

3. Nonwoven Geotextile

A textile produced by bonding and/or interlocking of fibers by mechanical, heat, or chemical means.

4. Roll

Unit of continuous geotextile without transverse seams as furnished by the manufacturer. Roll size may vary between manufacturers and types of geotextiles.

C. Acceptance Requirements

1. General Requirements

The geotextile shall:

1. Be composed of a polymeric yarn or fiber oriented into a stable network which retains its relative structure during handling, placement, and design service life.
2. Meet or exceed the properties outlined under "Geotextile Property Values."
3. Be free of any chemical treatment or coating which might significantly reduce permeability.
4. Have the selvage finished so the outer fibers are prevented from pulling away from the fabric.
5. Be free of defects or tears.
6. Be resistant to ambient temperatures, acid and alkaline conditions, micro-organisms and insects.
7. Be for the intended purpose and have dimensional stability.

2. Base the actual minimum average roll values furnished by the manufacturer on representative test results from the manufacturing plant which produced the rolls, and shall meet or exceed each of the specified minimum values. Clearly label all rolls as being part of the same production run certified as meeting all applicable requirements.

D. Geotextile Property Values

Minimum Value						
Geotextile Property ***Test Method***	**Drainage (1) Geotextile Type 1/Type 2**	**Riprap (1) Geotextile Type 1/Type 2**	**Subgrade Geotextile**	**Embankment Geotextile**	**Wall (1) Geotextile**	**Pavement (1) Overlay Geotextile**
Grab tensile strength minimum in each principal direction - *ASTM D4623*	80 lb/**180 lb**	200 lb/260 lb	180 lb	230 lb	----	80 lb
Grab Elongation - *ASTM D 4632*	15%	15%	----	----	----	50%
Burst Strength, Diaphragm method - *ASTM D 3786 Mod. (OSHA TM 814) (TF 25 Method 3)*	130 PSI/**290 PSI**	320 PSI/**430 PSI**	290 PSI	430 PSI	----	----
Puncture Strength - *ASTM D 4833 or ASTM D 3787 Mod. (OSHD TM 816)*	35 lb/**80 lb**	80 lb/**110 lb**	80 lb	110 lb	----	----
Apparent opening size (AOS), U.S. Std. Sieve - *ASTM D 4751 (CW-02215 Corps of Engr.)*	No. 70 sieve or smaller opening	No. 70 sieve or smaller opening	No. 30 sieve or smaller opening	No. 30 sieve or smaller opening	(2)	----
Water permea-bility - *ASTM D 4491*	0.1 cm/sec	0.1 cm/sec	0.005 cm/sec	0.005 cm/sec	(2)	----
Ultraviolet stability - *ASTM D 4355 at 500 hours*	----	70% strength retained	----	----	70% strength retained	----
Wide strip tensile strength - *ASTM D 4595*	----	----	----	----	(2)	----
Asphalt retention - *OSHD TM 817 (TF25 Method 3) (3)*	----	----	----	----	----	0.20 gal/sq. yd.
Melting point - *ASTM D 276*	----	----	----	----	----	300° F

205.03 CONSTRUCTION

205.03.01 Description

This work consists of furnishing and placing geotextiles in drains, under embankments, for embankment reinforcement, under riprap, buttresses, inlays, shear keys and erosion control applications, behind retaining structures, over roadbed subgrades, and beneath pavement overlays as shown on the plans and at other locations as directed.

205.03.02 Geotextile Installation Requirements

A. Acquisition and Storage

Provide complete rolls of geotextile as furnished by the manufacturer and protect against damage and deterioration. Store all geotextile rolls in a dry place and off the ground at all times according to ASTM D 4873. Cover all rolls and partial rolls with a dark protective covering when received. The geotextile will be rejected for use if the City Engineer determines it has defects, deterioration, or has been damaged.

B. Placement

1. Surface Preparation

Prepare the surface receiving the geotextile to a smooth condition free of obstructions, depressions and debris unless otherwise directed. Do not drag the geotextile on the ground or mishandle in any way.

Loosely place the geotextile without wrinkles so placement of the overlying material will not tear the geotextile. Lap or sew the geotextile at the ends and sides of adjoining sheets as specified.

2. On Slopes

Place the geotextile with the machine direction oriented up-down the slope. Lap the upper sheets over the top of the lower sheets. When the geotextile is placed on a slope steeper than 6:1, securely anchor the laps to the ground surface with pins or stakes as necessary to prevent slippage and tearing of the geotextile. Start placement of fill material on the geotextile at the toe of the slope and proceed upwards.

3. Where Exposed To Water

If geotextiles are placed under water or in areas where water will flow, the geotextile may be placed with the machine direction parallel to the direction of water flow instead of the placement direction specified. Overlap sheets so the upstream sheet is placed over the top of the downstream sheet. Adequately secure the geotextile to prevent slippage. As the geotextile is placed under water, place the backfill material on it to the required thickness. Do not place geotextile more than 50 feet ahead of the specified cover material.

C. Overlaps

Minimum overlap requirements for geotextiles are:

GEOTEXTILE APPLICATION	MINIMUM OVERLAP REQUIREMENTS, INCHES
Drains	12
Embankment Stabilization	24
Geotextile Wall Reinforcement	24
Pavement Overlays	*
Riprap and Rock Buttresses	24
Roadbed Subgrade Stabilization	24

* Use sufficient overlap to insure closure, but not more than 6 inches.

If the City Engineer determines the specified overlap is not sufficient, increase the overlap to provide adequate coverage or sew the geotextile together in the field. If field sewn, the provision of 00350.20 and 00350.40(d) apply.

D. Field Seams

1. General

Obtain the City Engineer's approval before field seaming and stitching. Sew field seams with polymeric thread consisting of polypropylene, polyester, or kevlar, and as resistant to deterioration as the geotextile being sewn. Use a color of thread that contrasts with the geotextile being sewn so the stitches are exposed for inspection when the geotextile is placed.

2. Seam Type

Obtain the geotextile manufacturer's recommendation for the type of seam and stitch to be used. If the Contractor does not obtain and provide the foregoing technical information, use a "J" seam with at least 3 stitches per inch. The flat, or prayer, seam may be used for repair of damaged in-place geotextile.

E. Protection of Geotextile

Protect the geotextile at all times from ultraviolet (UV) rays, contamination by surface runoff, and construction activities.

Traffic or construction equipment will not be permitted directly on the geotextile except as authorized.

When placed for construction, cover the geotextile with specified cover material as soon as possible. Do not leave in uncovered condition for more than 5 days, except when used with temporary retained earth walls and asphalt overlays.

Place cover material on the geotextile in a manner that the geotextile is not torn, punctured, or shifted. Use a minimum 6 inches thick cover layer or twice the maximum aggregate size, whichever is thicker. End-dumping cover material directly on the geotextile will not be permitted.

Limit construction vehicles in size and weight so rutting in the initial layer above the geotextile is not more than 3 inches deep or half the layer thickness, whichever is lesser. Turning of vehicles on the first layer will not be permitted.

F. Repair of Geotextile

Repair or replace all torn, punctured, or contaminated goetextiles during construction at no cost to the Division. Repair by placing a patch of the specified geotextile over the affected area. Overlap the existing geotextile with the patch. Where geotextile seams are required to be sewn, repair any damaged sheet by sewing unless otherwise indicated on the plans or special provisions or as directed.

G. Drainage Geotextile

When used in trenches for drains, place the geotextile in the trench as shown on the plans to loosely conform to the shape of the trench with no wrinkles or folds.

H. Embankment Geotextile

Construct embankment stabilization according to details shown on the plans. Place the geotextile layers so the geotextile machine direction is transverse to the embankment centerline. Spread the geotextile so all slack and wrinkles are eliminated.

I. Riprap Geotextile

Place geotextile behind and beneath riprap, buttresses, inlays, shear keys, and erosion control applications according to the details shown. Demonstrate to the satisfaction of the City Engineer that the combination of the rockfill drop height and the thickness of any aggregate cushion, when specified or required, are adequate to not puncture or damage the geotextile when placing the riprap or stone embankment material. In addition, the following limits apply.

Maximum Drop Height, Feet		
Size of Rock Material	**Onto Geotextile**	**Onto an Aggregate Cushion Blanket**
Greater than 200 lbs.	0	3
200 lbs. or less	3	3

After placing the riprap, backfill all voids in the riprap face so the geotextile is completely covered and not visible.

J. Wall Geotextile

1. General

Begin wall construction at the lowest portion of the excavation and place each layer horizontally as shown on the plans. Complete each layer in its entirety before the next layer is started. Seams will be allowed only at the wall face. Either overlap geotextile sheets perpendicular to the wall or sew seams parallel to the wall face. Stretch the geotextile in a perpendicular direction to the wall face to eliminate slack before backfilling.

2. Forming the Wall

Use a temporary form system at the wall face during construction. A typical temporary form system and a sequence of wall construction required are shown in the plans. Use pegs, pins, or the manufacturer's recommended method as approved by the City Engineer, in combination with the forming system, to hold the geotextile in place until the cover material is placed.

3. Backfill for Wall Construction

Compact the backfill for the wall within the limits shown or directed. Compact each layer to 95% of maximum density as determined by OSHD TM 109. Maintain the water content to within +/- 3% of the optimum moisture content. Sheepsfoot rollers and vibratory rollers or other rollers with protrusions will not be allowed within 3 feet of the wall face. Compact this area using approved light mechanical tampers, without damaging or distorting the wall facing or reinforcing layers.

K. Subgrade Geotextile

For roadbed subgrade separation, prepare the subgrade according to Section 501 (Subgrade).

Correct geotextile failures, as evidenced by soil pumping or roadbed distortion, by removing any covering material in the affected area and placing a geotextile patch on the exposed geotextile. The patch shall overlap the exposed geotextile a minimum of 12 inches. Cover the patch with the specified cover material and compact before proceeding.

L. Pavement Overlay Geotextile

1. General

Place geotextile and pavement overlay in four basic steps:

1. Surface preparation
2. Sealant application
3. Geotextile placement
4. Overlay placement

As outlined according to Section 508 (Geotextile Fabric).

206 LANDSCAPING AND LANDSCAPE RESTORATION

206.01 DESCRIPTION

This section covers the work necessary for: (A) finish grading, addition of topsoil, fertilizer, and weed control, establishment of lawns or grass areas by sod or seeding, and maintenance of lawn or grass areas, complete; (B) mulching, fertilization, and planting of ground cover, establishment of nursery stock, such as trees, shrubs, and small plants, and maintenance of ground cover and nursery stock, complete; (C) irrigation system and subsurface drainage, complete.

206.02 MATERIALS

206.02.01 Plants

Names of plants to conform to standardized names of the American Joint Committee on Horticultural Nomenclature. Names of varieties not included therein conform to names generally accepted in the nursery trade. Provide plants which are nursery-grown with habit of growth that is normal for the species, sound, healthy, vigorous, and free from insects, diseases, and injuries and equal to or exceeding measurements specified, measured before pruning with branches in normal position. Provide sizes and methods of handling according to the code of standards recommended by the AAN.

206.02.02 Seed

Provide tested grass and legume seed from blue tag stock and from the latest crop available. Deliver each variety or mixture in standard containers labeled in accordance with Oregon State laws and U.S. Department of Agriculture rules and regulations under the Federal Seed Act. Provide with label showing the following: seed variety, percentage of purity, germination, maximum weed content, and date of test (must be within 9 months of date of delivery). Seed must be tested as set forth in the General Seed Certification Standard by the Oregon State University Certification Board. Mold or evidence of container having been wet or otherwise damaged will be cause for rejection of each lot of seed.

206.02.03 Sod

Provide grass sod from certified or approved source, strongly rooted, and free of pernicious weeds. Sod should be composed of several seed varieties excluding blue and bent grass varieties.

206.02.04 Topsoil

A. Native Topsoil

Save, store, protect, and reuse approved native topsoil taken from the top 12 inches of the excavation. Ensure that topsoil is free from grass, overburden and roots, sticks, hard clay, and any stones which will not pass a 1-inch square opening. Wherever native topsoil cannot be saved or is not satisfactory for reuse, use imported topsoil conforming

to Subsection 204.02.09 (Imported Topsoil), but only with the approval of the City Engineer.

206.02.05 Sand

Conform to the requirements of Subsection 205.02.12.C (Fine Aggregate).

206.02.06 Organic Material for Soil Amendment

Use a peat consisting of natural residue formed by decomposition of reeds, sedges, or mosses from freshwater site. Peat must be free from lumps, roots, stones, and capable of absorbing at least 4 times its dry weight of water. It must contain organic matter not less than 90% on a dry weight basis, and have a maximum moisture content at time of delivery of 65% by weight.

206.02.07 Lime

Provide a lime composed of ground dolomitic limestone not less than 85% total carbonates and magnesium, ground so that 50% passes 100-mesh sieve and 90% passes 20-mesh sieve. Coarser material may be acceptable provided the specified rates of application are increased proportionately on the basis of quantities passing 100-mesh sieve.

206.02.08 Subdrains

Use perforated PVC drain pipe, meeting the requirements of Subsection 601.02.04 (PVC Pipe), unless otherwise specified, and as approved by the City Engineer.

206.02.09 Irrigation and Water Systems

A. Pipe

Use Schedule 40 PVC on all mainlines, Class 200 PVC for lateral lines and solvent weld PVC pipe (SDR-21), conforming to ASTM D 2241, and fittings of PVC with deep socket dimensions conforming to ASTM D 2466.

B. Main Valves

Install the following main valves: up to and including 3-inch, resilient seated ball valve with bronze bodies, 4-inch and larger, gate valves with either bronze or iron bodies, all having bronze stems, bronze seat rings, and bronze disc faces, and conforming to ASTM B 62.

C. Pressure Reducing Valves

Use adjustable, heavy duty bronze pressure reducing valves. Must have approved stainless steel or monel strainer to permit quick cleaning or replacement without dismantling or removing the valve from the line and with integral or independent union.

D. Control Valves

Provide normally open electric control valves of brass or bronze for underground installation. Valves shall have cross or slot type handle for operation with a standard key, a removable bonnet and stem assembly, an adjustable packing gland, a rising stem to assure full opening of the valve, renewable disc-type washer seat, and integral or independent union.

Use electrically operated control valves of bronze, brass, or stainless steel. These shall be of the normally open type, having an open or close time greater than 4 seconds, and capable of manual control during power failure. Provide with a motor assembly or operating parts which are removable without disturbing the valve body. Must be all waterproof for underground burial, and with integral or independent union for supply line connection.

E. Quick-Coupling Valves

Supply 1-piece or 2-piece body type, locking cap, having body of approved heavy duty brass or bronze, watertight before and after the coupler is inserted, and designed so that the valve seat is closed before the coupler is removed. Provide valve couplers, keys, and hose swivels of compatible design to quick-coupling valves.

F. Risers

Connect sprinkler heads and quick-coupling valves to plastic pipe water supply lines with Schedule 80 PVC pipe risers. Heads and valves connected to plastic pipe water supply lines shall, in addition, be provided with an approved swing joint. All threaded pieces shall be wrapped with Teflon tape.

G. Backflow Prevention

Use either reduced pressure or double check valve assemblies, as indicated in contract documents, of a type and size approved by the City.

206.02.10 Fertilizer

Use fertilizer conforming to the recommended content as provided for in 206.03.02 (Soil Test). Furnish fertilizer in moisture-proof bags with weight and the manufacturer's certified analysis of the contents showing the percentage for each ingredient. Furnish fertilizer in a dry condition free from lumps and caking, in a uniform granular or palletized form, of standard commercial grade conforming to all State and federal regulations and to the standards of the Association of Official Agricultural Chemists. Fertilizer may be furnished in bulk form if an approved transfer hopper is provided.

206.02.11 Mulch and Ground Covers

Use one or more of the following types of mulch.

1. Organic mulch of clean ground Douglas fir or hemlock bark graded so that 50% consists of particles larger than ¼ inch, but not exceeding 1 inch, and 20% will pass a No. 10 sieve.
2. Stone mulch of screened washed bank gravel with rounded pebbles. Submit sample for approval of color and size.
3. Fiber-glass mulch of approved commercial grade fiber-glass yarn mat.
4. Straw mulch of threshed straw of oats, wheat, or rye, free from seed of noxious weeds or clean salt hay.
5. On steep slopes use approved mesh to reinforce mulch or plantings such as fiber mulch of heavy, twisted jute mesh or other material as approved, with openings between strands approximately 1-inch square.
6. Spray mulch of a verdyol complex, with nontoxic, 100% organic water soluble powder binding agent with silva fiber used in hydraulic seeding operations.

206.02.12 Tie Downs

Use one or more of the following materials as the need arises.

1. Eye-bolt masonry anchors of galvanized steel, with approved lead shield or flush shell for setting into masonry joint or concrete.
2. Wood stakes, 2-inch by 2-inch by 96-inch, clear straight cedar, or approved.
3. Wire of 12 gauge, pliable galvanized steel, for guys, or for fastening trees to stakes.

4. Hose for guy wire encasement will be of 2-ply reinforced rubber garden hose, having a minimum ⅝-inch diameter threaded openings fitted with screw eyes.

5. Turnbuckles will be zinc-coated, with a 6½-inch lengthwise opening, and ⅜-inch diameter threaded openings fitted with screw eyes.

206.02.13 Soil Sterilant

Soil sterilant shall be as approved by the City Engineer for the purpose specified and shall be applied conforming to manufacturer's recommendations.

206.03 CONSTRUCTION

206.03.01 General

Conform to the manufacturer's and supplier's recommendations and instructions and to accepted practices in the industry.

206.03.02 Soil Test

If directed by the City Engineer, have a soil test performed before the project schedule is submitted. The test may be performed by any Oregon State University County Extension Agent or by any other approved soils testing laboratory. The soils analysis shall provide a chemical analysis of the soil and recommendations for soil improvement for the vegetation to be grown. The recommendations shall be used to select the particular fertilizer and soil improvement materials to be used prior to planting.

206.03.03 Lawns and Grass

A. Project Schedule

Within 20 calendar days of the date specified for commencement of work, submit for approval a time schedule indicating dates for beginning and completion of the following operations.

1. Delivery of Materials
2. Preparation of Seedbed
3. Planting Grass
4. Maintenance

B. Delivery, Handling, and Storage of Sod

Deliver sod immediately on lifting and after lawn bed is prepared for planting. Protect sod from drying by covering during delivery to protect from sun and wind. Store materials only in designated areas.

If sod is not laid within 2 days of delivery, spread out flat with grass side up in cool place and keep moist. Rolled or stacked sod that becomes yellow will not be accepted.

C. Preparation of Subgrade

After rough grading is completed and before topsoil is spread, apply lime and/or super phosphate as determined by soil analysis, and mix to a depth of 4 to 6 inches. Conform to manufacturer's recommendations for applying lime and super phosphate simultaneously, and schedule application or applications accordingly.

D. Subsurface Drainage

Lay drainage pipe on firm bed of gravel with minimum fall of 0.5% and located as shown on the plans. Place pipe at a minimum depth of 24 inches and not any deeper than required to produce minimum fall. Cover backfill with fiberglass mat to prevent infiltrations of soil. Backfill trenches with gravel to within 4 inches of subgrade.

Place other drain materials in conformance with the applicable requirements in Division 5 (Sewers). Complete backfilling of trenches with a 4-inch layer of coarse sand and tamp for compaction, as approved.

E. Topsoil and Finish Grading

Spread topsoil and soil conditioner over the prepared rough grade using a rubber-tired tractor with grader blade or equivalent, weighing a maximum of 3½ tons. Imported topsoil must be incorporated with at least a 2-inch layer of subsoil. Thoroughly mix the applied materials to a depth of 8 inches using a disc or cultivator over the entire area in 2 directions at right angles. Rake topsoil areas to a uniform grade so that all areas drain, as shown on the plans or as approved. Remove all trash and any stones exceeding 2 inches in diameter from the area to a depth of 2 inches prior to preparation and planting grass.

F. Soil Sterilant

Apply specified soil sterilant at the rate recommended and by the method approved by the manufacturer or as specified.

G. Seeding

Plant grass seed only at times when local weather and other conditions are favorable to the preparation of the soil and to the germination and growth of grass seed. Sow grassed areas evenly with a mechanical spreader at the recommended rate and method approved by Oregon Department of Agriculture Extension Service. Method of seeding may be varied, as approved, however, the responsibility to establish a smooth, uniformly grassed area will not be waived. Hydroseeding will be permitted, unless otherwise specified.

H. Sodding

Before sod is laid, correct soft spots and irregularities in grade of the prepared bed, as approved. Lay sod, and tamp or roll so that no voids occur. Water sod thoroughly. Complete sod surface true to finished grade, even and firm. On slopes steeper than 1 to 2, fasten sod with wooden pins 6 inches long driven through the sod into the soil, flush with the top of the sod at approved intervals.

I. Mulching and Protection of Slopes

Mulch all areas with a slope from 5% to 20% by spreading a uniform light cover of straw mulch over the seeded area at a rate of 1½ tons per acre.

In areas with a slope steeper than 20%, and up to 25%, install erosion control netting. In nonturf areas, cover netting with fir bark mulch.

Mulch all areas with a slope steeper than 25% with spray mulch applied at a rate of 15 gallons per 1,000 square feet after wetting the ground with water penetrating at least 1 inch deep.

Protect new seeded area from pedestrian traffic. Unless otherwise approved, erect a fence of 2-inch by 2-inch posts 4 feet high spaced 10 feet on center and strung with jute, hemp, or a single strand of No. 12 gauge wire marked with cloth strips at 3-foot intervals between posts.

J. Maintenance

Begin maintenance immediately after each portion of lawn is planted and continue for 8 weeks after all lawn planting is completed.

Water to keep surface soil moist. Repair washed out areas by filling with topsoil, fertilizing, and seeding. Replace mulch on banks when washed or blown away. Repair fencing as needed. Mow to 2 inches after grass reaches 3 inches in height, and mow

frequently enough to keep grass from exceeding 2½ inches. Weed by local spot application of selective herbicide only after first planting season when grass is established.

K. Lawn Guarantee

If, at the end of the 8-week lawn maintenance period, a satisfactory stand of grass has not been produced, immediately renovate and reseed the unsatisfactory portions of lawn, or when approved, reseed at the beginning of the next planting season. If a satisfactory stand of grass develops by June 1st of the following year, the lawn will be accepted. If the lawn is not accepted, a complete replanting will be required during the ensuing planting season.

A satisfactory stand is defined as a lawn or section of lawn that has:

1. No bare spots larger than 3 square feet.
2. Not more than 10% of the total area with bare spots larger than 1 square foot.
3. Not more than 15% of the total area with bare spots larger than 6 inches square.

L. Inspection for Acceptance

Submit a written notice 8 weeks after the start of maintenance on the last section of completed lawn. Within 15 days of such written notice the City Engineer will make an inspection of the lawn to determine if a satisfactory stand of grass has been produced.

206.03.04 Trees, Shrubs, and Ground Cover

A. Delivery, Preparation, and Storage

Dig plants designated as balled and burlapped in the contract documents with firm, natural balls of earth of diameter and depth sufficient to encompass the fibrous and feeding root system required for full recovery of the plant. Firmly wrap balls with burlap and bind with twine, cord, or wire mesh. Where necessary to prevent breaking or cracking of the ball during the process of planting, or where the tree exceeds 4 inches in diameter, secure the ball to a platform. Meet or exceed AAN Standards, current edition.

Dig bare root plants during dormant period to remove earth with the least possible injury to the fibrous root system. Cover the roots with thick coating of mud immediately after digging by puddling or wrapping in wet straw, moss, or other suitable packing material for protection until delivery.

Furnish container grown plants with self-established root systems sufficient to hold earth together after removal from the container but not root-bound. Plants shall have grown for at least 3 months in the container with inside diameter specified. Meet or exceed AAN Standards, current edition.

If plants are not in the dormant state, spray with anti-desiccant to cover foliage as recommended by manufacturer, prior to digging the plants. During shipment, protect the plants with tarpaulin or other approved covering to prevent excessive drying from the sun and wind.

Cover balls of balled and burlapped plants, and containers of container grown plants, which cannot be planted immediately upon delivery, with moist mulch to protect from drying. Plant or heel-in bare root plants immediately upon delivery. Water plants as necessary to prevent drying until planted. Do pruning only at the time of planting.

Open and separate all bundles of heeled-in bare root plants before the roots are covered. Avoid leaving air pockets among the roots.

B. Soil Conditioning

After the specified chemical analysis report for topsoil is received, prepare the topsoil mixture for plant pits and beds by thoroughly mixing the approved topsoil with soil conditioner materials, fertilizer, and lime. Thoroughly mix with rotary mixer or other approved method in the following proportions.

Topsoil Classification by Clay Content	Top Soil	Sand	Peat	Fertilizer*	Lime
Clay 5 – 10%	4	0	1 LB/CY	(½) LB/CY	(1)
Clay 10 – 15%	2	2	1 LB/CY	(½) LB/CY	(1)
Clay 15 – 25%	2	4	1½ LB/CY	(½) LB/CY	(1)

*Adjust in accordance with Soil Test chemical analysis report.

Store and protect topsoil mixture and other materials at designated area of the site. Protect topsoil mixture from excessive leaching by covering with tarpaulin if stored for more than 6 weeks.

C. Planting Procedures

Within 20 calendar days after receiving the Notice to Proceed, submit a time schedule for approval indicating dates for commencement and completion of the following operations.

1. Tagging of plants in the nurseries
2. Survey and staking of plant locations
3. Delivery of topsoil and other materials
4. Digging and preparation of plant pits and beds
5. Delivery of trees and plants to the site
6. Planting of trees and other plants
7. Fertilization and application of pre-emergent herbicide
8. Guying, staking and mulching
9. Completion of work for start of guarantee period

At least 20 days before start of the guarantee period, submit a schedule of proposed maintenance operations indicating the number of man-hours contemplated for each operation by season during autumn, winter, spring and summer.

Locate new planting where shown on plans, except make approved adjustments where obstructions below ground are encountered or where changes have been made in the construction. Place no planting, except ground cover, closer than 18 inches to pavements and structures. Dig plant pits and have soil mixture for planting ready before plants are delivered. Excavate circular pits with vertical sides a minimum of 2 feet greater than the diameter of the ball. For trees, shrubs, and vines excavate pits to depth sufficient to accommodate ball or roots when plant is set to finished grade. Place 3 inches of compacted soil mixture in the bottom of pit. Set plants upright and face as approved to give the best appearance or relationship to adjacent structures. Remove wire, burlap, and surplus binding from top and sides of balls. Spread roots in normal position. Cut all broken or frayed roots off cleanly. Place prepared soil mixture and compact carefully to avoid injury to roots and to fill voids. When hole is nearly filled, add water as necessary and allow to soak away. Fill hole to finished grade. When directed by the City Engineer, form shallow saucer around plant by placing ridge of topsoil around edge of pit 2 feet greater than diameter of ball. After ground settles, fill with additional soil to level of finished grade.

Plant trees before surrounding smaller plants and covers are placed. Position trees as shown on plans or, where spacing dimensions or locations are not clear, as approved.

Plant shrubs on centers as shown on plans with spacing adjusted if required to evenly fill bed using specified quantity of plants.

Plant hedges on centers as shown on plans. Excavate trenches a maximum of 4 inches deeper and 12 inches wider than spread of roots or diameter of balls. Make adjustments to spacing if necessary to fill trench evenly with the quantity of plants shown on plans.

Plant ground covers in beds having minimum 8 inch of prepared soil mixture. Treat ground cover beds with soil fumigant, after preparation for planting, but before any plants are installed within bed area, to destroy weed seeds. Apply according to Manufacturer's directions, delaying planting for the recommended minimum period to allow dissipation of herbicide. Space plants as shown on plans. Mulch and water immediately after planting.

Plant bulbs in ground cover beds to recommended depths for each bulb type as shown on plans.

Provide trees and planting beds with 3 inch layer of fir or hemlock bark mulch within 2 days after planting and keep at this depth throughout maintenance period. Mulch to entirely cover area of saucer around each tree.

Use 4 guys equally spaced as shown on plans for all trees greater than 4 inches in diameter.

Use 3 guys equally spaced as shown on plans for all trees 4 inches in diameter or less.

Where shown on plans, wrap trunks of trees spirally from ground line to height of second branches. Make all wrappings neat and snug and hold material in place by raffia cord at top and bottom.

D. Pruning and Repair

At completion of planting work, prune and repair injuries at all plants. Limit amount of pruning to minimum necessary to remove dead or injured twigs and branches and to compensate for the loss of roots as a result of planting operations. Do not change natural habit or shape of plant. Make cuts to branch collar, leaving no stubs. On all cuts over ¾ inch in diameter and bruises or scars on bark, trace the injured cambium back to living tissue and remove. Smooth and shape wounds so as not to retain water. Coat with approved tree wound paint.

E. Plant Guarantee

Guarantee all plants for a minimum of 1 year to be alive and in vigorous growing condition at the end of guarantee period. Guarantee period shall extend 1 year from date of acceptance of work as defined in Subsection 101.01 (Definitions). Remove unsatisfactory plants and replace with plants of the same kind, quality and size as originally provided as specified. Guarantee all plant replacements to be alive and in vigorous growing condition 1 year after replacement. Bear all costs of replacement except for replacements resulting from removal, loss or damage due to occupancy of project in any part, vandalism or acts, of neglect on part of others. Replace plants that die immediately, unless during a season unfavorable for planting. When season is unfavorable, plant during the first month of the next favorable planting season.

F. Maintenance

Begin maintenance immediately after each plant is installed and continue to maintain until the end of the guarantee period.

Perform the following operations: (1) Watering as often as required to maintain capillary water within 2 inches of the soil surface around plants, (2) weeding of plant beds, planting saucers and plantpockets to keep free of weeds, using approved selective herbicide according to the Manufacturer's directions for use, and/or weeding by hand methods, (3) mulching monthly to replenish mulch and keep at required 2 inch minimum depth, (4) tightening and repairing guys to keep trees erect and supported without damage to bark, (5) resetting plants to proper grades or upright position, (6) restoration of planting saucers, (7) seasonal spraying to control disease or insect pests that may impair plant vigor.

Replace plants required by the plant guarantee on a regular monthly basis, except during the months of December, January and February.

206.03.05 Irrigation Systems

A. General

Install components of the irrigation system as shown and as recommended by the equipment manufacturers. All sprinkler runouts shall be evenly graded to the drain points shown on plans. Piping beneath paved areas shall have a minimum cover of 30 inches. Construct irrigation system in areas to receive topsoil after topsoil is spread, compacted, and rough graded. Steel pipe or copper tubing may be bedded using excavated material. Bed PVC pipe in sand, as shown on plans and backfill to a minimum of 3 inches above the pipe with sand. Determine the final number and location of sprinkler heads after grading is complete, such that complete coverage of all sprinkled areas is provided. Flush out system thoroughly and pressure test before installing sprinkler heads. Adjust flow on each head for proper coverage.

Lawn areas and shrub areas shall be irrigated separately.

Repair and replace irrigation parts and winterize as necessary.

B. Steel Pipe

Ream, clean, and remove burrs and mill scale from piping before making up. Make joints with approved joint compound.

C. Copper Tubing

Cut tubing square and remove burrs. Clean both inside of fittings and outside of tubings with steel wool and muriatic acid before sweating. Take care to prevent annealing of fittings and hard-drawn tubing when making connections. Mitering of joints for elbows and notching of straight runs of pipe for tees will not be permitted.

D. PVC Pipe

Cut, make up, and install PVC pipe in accordance with the manufacturer's recommendations, as approved. Lay PVC pipe using the practice of snaking from one side of the trench to the other, 1 cycle per 40 feet or less. Use strap wrenches for tightening threaded plastic joints. Take care not to over-tighten fittings. Do not lay PVC pipe when the temperature is below 40` F. Sprinklers and valves shall be installed in accordance with the manufacturer's recommendations, as approved.

207 RESTORATION AND CLEANUP

207.01 DESCRIPTION

This section covers the work necessary to restore and clean up the site, and remove all construction equipment, refuse, and unused materials of any kind resulting from project activities.

207.02 MATERIALS

Provide all materials required to accomplish the work as specified.

207.03 CONSTRUCTION

207.03.01 Surface Dressing

Slopes, sidewalk areas, planting areas, and roadway shall be smoothed and dressed to the required cross section and grade by means of a grading machine insofar as it is possible to do without damaging the work or existing improvements, trees, and shrubs. Unless specified otherwise, the maximum slope shall be 2 to 1 in cut and fill. Supplement machine dressing by hand work as necessary.

Upon completion of the cleaning and dressing, the project shall appear uniform in all respects. Grade all areas true to line and grade as shown. Excavated areas adjoining new walkways and curbs shall be backfilled with top soil. Where the existing ground is below the sidewalk and curb, fill and dress the area to the walk. Wherever fill material is required in the planting area, make finish surface high enough to allow for final settlement. Surface improvements other than topsoil which are adjacent to new walkways or curbs, such as asphalt paving or brickwork, shall be replaced with like materials.

207.03.02 Removal of Materials

Remove and dispose of all excavated or construction materials, equipment, and trash of all kinds resulting from the work. Where brush and trees have been disturbed, remove, and dispose of or restore same as directed by the City Engineer at the Contractor's expense.

207.03.03 Cleaning Drains

Clean all drainage facilities such as inlets, catch basins, culverts, and open ditches of all excess material or debris which is the result of the work.

207.03.04 Cleaning Paved Surfaces and Appurtenances

Clean all pavement surfaces, whether new or existing within the limits of the project. All haul routes will be kept free of dust, dirt, gravel, and debris at all times. Clean existing improvements such as curbs, gutters, walls, sidewalks, castings for manholes, monuments, water gates, lamp poles, vaults, signs, and other similar installations.

Flush the street with a pressure type flusher and hand broom or flush all sidewalks.

207.03.05 Restoring Planted Areas

Hand-rake and drag all former grasses and/or planted areas leaving disturbed areas free from rocks, gravel, clay, or any other foreign material and ready, in all respects, for seeding. The finished surface shall conform to the original surface, be free-draining and free from holes, rough spots, or other surface features detrimental to a seeded area.

207.03.06 Restoring Mobilization, Borrow, and Disposal Areas

Clean all properties which were disturbed during construction of the project. Dispose of all uprooted stumps, felled trees, brush, excess excavation, rock, discarded materials, rubbish, and debris. Remove all plant, equipment, tools, and supplies and restore the property occupied to a neat, clean, and orderly condition, in equal or better condition to that existing before move in.

207.03.07 Removal of Signs

Do not remove warning, regulatory, guide, or project signs prior to formal acceptance, except as directed.

207.03.08 Restoring Curbs, Sidewalks, and Driveways

Repair or replace all curbs, sidewalks, driveways, and other structures damaged during construction of the work. Construct curbs, sidewalks, driveways, and other structures in conformance with the applicable requirements in Division 5 (Street Construction Standards).

208 BORING AND JACKING

208.01 DESCRIPTION

208.01.01 Boring

Boring shall include all methods by which a pipe or conduit is pushed or pulled into place and by which the excavation method precludes the stationing of a worker within the pipe or conduit without stopping or removing the excavation equipment.

208.01.02 Jacking

Jacking shall include all methods by which a pipe or conduit is pushed or pulled into place and one or more workers inside the conduit excavate and assist in keeping the conduit on a straight and true grade and alignment.

208.01.03 Permits

Permitter shall designate the owner of railroad tracks or other facilities with prior rights, under which a pipe or conduit must be bored or jacked.

All necessary permits for the undercrossing will be obtained by the City.

The operation across the Permitter's right-of-way must conform to the requirements of the Permitter as outlined in a pipeline crossing agreement made between the Permitter and the City. The Contractor shall conform with all requirements of the pipeline crossing agreement. Before work is commenced, the Contractor shall be solely responsible for obtaining and delivering to the Permitter a public liability and property damage insurance policy in the amount required in the pipeline crossing agreement. The insurance company writing the policy shall be authorized to do business in the State of Oregon and shall be satisfactory to the Permitter. The insurance policy or policies shall be delivered to and remain in the possession of the Permitter. If any special agreement is required between the Contractor and the Permitter, it shall be completed and signed before the Contractor enters upon or commences work on the Permitter's property.

208.02 MATERIALS

208.02.01 Pipe Bedding and Pipe Zone Material

Conform to the requirements of Section 204 (Excavation, Embankment, Bedding and Backfill).

208.02.02 Pipe

Conform to Section 301 (Pipe and Fittings [Sanitary Sewers]) or Section 402 (Waterworks Materials) for the strength, class, and type as shown or specified.

208.02.03 Casing

Provide casing of size to permit proper construction to the required lines and grades. Casing shall be the type shown in the table below.

Use minimum gauge or wall thickness corresponding to the size of casing selected from the following; however, be responsible for selecting the gauge consistent with the operations and the specified requirements of the perimitter.

Diameter Inches	Smooth Steel Pipe Min. Thickness
12 & Under	3/16 ASTM A-53
15 - 24	¼ ASTM A-53
30 - 36	5/16 AWWA C-201
48 - 78	Not Allowable

Equip jacked casings with nipples at the springline and crown at 10-foot centers when pressure grouting is specified.

208.02.04 Grout

Grout for filling the annular space between the carrier pipe and casing pipe shall be a mixture of Portland Cement, sand, and pea gravel proportioned to allow complete filling of the annular space. The mixture shall have a creamy consistency which enables it to be pumped with a concrete pump.

Grout for pressure grouting outside jacked carrier or casing pipe shall be a mixture of Portland Cement (Type 1-P) and water proportioned to allow complete filling of all voids. The maximum allowable slump shall be less than 5 inches.

208.02.05 Stainless Steel Bands

½-inch-wide by 0.020-inch-thick steel bands, or equal.

208.02.06 Supports and Skids

Lumber shall be No. 2 West Coast Douglas fir graded in conformance with WWPA Current Grading Rules for Western Lumber. Material shall be pressure treated with Creosote or pentachlorophenol in mineral spirits in accordance with AWPA C14, C8, C9, and C2 as applicable. Minimum retention shall be as designated for contact with ground. Method of treatment shall be in accordance with the applicable portion of the AWPA standards. Insofar as practicable, all timbers shall be cut to size before the material is given the preservative treatment.

208.03 CONSTRUCTION

208.03.01 General

Conform to all federal, State and local laws and regulations pertaining to tunneling and specifically to the standards set forth in the Oregon Safety Code for Places of Employment, Chapter 24, Safety Code for Mining, Tunneling and Quarrying, published by the Oregon Industrial Accident Commission, latest revision.

Before the start of the work, submit satisfactory evidence to the City Engineer that all insurance coverage requirements called for by the Permitter have been complied with. If required, proposed construction methods and materials shall be submitted to the Permitter before the start of construction. Written authorization to proceed from the Permitter shall be submitted to the City Engineer before the start of construction.

Prior to starting construction, all required labor, materials, and equipment shall be on the site. Notify all Permitters at least 48 hours in advance of working within their right-of-way unless otherwise specified in the permit.

Contractor to note when working near or around light rail tracks to use necessary equipment and precaution to avoid electrical system. The light rail uses a direct current electrification system that delivers electricity overhead and returns the electricity on the train rails. Stray current is likely.

208.03.02 Excavation

Excavation shall be unclassified and shall include whatever materials are encountered to the depths as shown or as required. The boring Contractor or Subcontractor will visit the site and

make an estimate of the kind and extent of various materials which may be encountered in the excavation.

208.03.03 Alternate of Jacking or Boring

Jacking or boring may be allowed in lieu of the open trench method. However, written authorization by the City Engineer must first be obtained. The City Engineer retains the right to reject either the jacking or boring method without rejecting the other. Authorization by the City Engineer shall in no way relieve the Contractor of the responsibility for making a satisfactory installation meeting the requirements set forth herein.

208.03.04 Jacking and Boring

Equip the leading section of pipe or conduit with a jacking head securely anchored thereto to prevent any wobble or alignment variation during the jacking or boring operation. For jacking, all excavation shall be carried out entirely within the jacking head, and no excavation in advance thereof shall be permitted. For jacking, every effort shall be made to avoid any loss of earth outside the jacking head. Remove excavated material from the pipe or conduit as excavation progresses, and do not allow such material to accumulate within the pipe or conduit.

Jack or bore all pipes or conduits to true line and grade. Should any deviation from true line and grade be considered excessive, in the judgment of the City Engineer, the Contractor shall correct at no expense to the City.

Should appreciable loss of ground occur during the jacking or boring operations, backpack all voids promptly. Fill all remaining voids upon completion of the operations; such filling or backpacking shall be with grout.

The design of all sewer pipe or conduit is based upon the superimposed loads and not upon the loads resulting from the jacking or boring operations. The Contractor shall be responsible for any increase in pipe strength necessary to withstand jacking or boring loads and grouting.

208.03.05 Concrete Pipe and Box Section

Protect the driving ends of concrete pipe or conduit against spalling and other damage. Intermediate joints shall be similarly protected by the installation of sufficient bearing shims to properly distribute the bearing stresses. Remove any section of pipe or conduit showing signs of failure and replace with a new section.

208.03.06 Smooth Steel Casing

Join sections of smooth steel casing to be jacked or bored by welding the joints with a continuous weld for full circumference or by other approved means. Provide joints which are capable of resisting the jacking and boring forces without failure.

Brace pipe or conduit installed in a casing to prevent shifting and flotation. Fill the void between the casing and the pipe or conduit with grout, or other material as specified or approved.

If not shown on Plans or specified, the casing diameter shall be the option of the Contractor. Provide casing of such strength as to withstand the jacking or boring loads and of such diameter to allow filling the void between the pipe or conduit and casing with the approved material.

208.03.07 Grouting Voids Outside Casing or Carrier Pipe

After the casing, or carrier pipe where no casing is specified, has been jacked or bored into position, pressure grout to fill all voids outside the casing through the grout holes provided. Start grouting at the spring line hole at one end and pump grout until grout appears in the grout hole at the crown, then start grouting through the opposite spring line hole until grout appears at the hole in the crown. Next grout through the hole at the crown until grout appears in the next set of holes along the pipe. Plug the holes at the starting point and move to the next set of holes and repeat

grouting sequence until full length of jacked pipe has been grouted. Grouting once commenced at any one point shall be completed without stopping.

Nipples installed in grout holes must be removed and the holes grouted flush with the pipe wall or nipples should be cut off flush with pipe wall and grouted over or use flush mount pipe nipples and plugs.

208.03.08 Cased Pipe

Provide strapped timber cradle under barrel of pipe, join pipe, and slide into casing. Pipe barrel shall bear continuously on cradles. Pipe installation shall conform to applicable requirements in Section 301 (Pipe and Fittings [Sanitary Sewers]) or Section 402 (Waterworks Materials), including hydrostatic or air testing and line and grade.

208.03.09 Grouting Void Between Carrier Pipe and Casing

Completely fill the annular space between the casing and the carrier pipe with grout per Subsection 205.02.04.B (Type "B" Grout) or as specified. Fill the voids by continuously pumping grout from one end of casing pipe until grout appears at the other open end. When grouting, use low pressure grouting equipment. The grouting pressures shall not be greater than the design loads of the carrier pipe. The Contractor shall, at their sole expense, remove and replace any pipe sections which fail during the grouting process.

208.03.10 Contractor's Responsibility

The Contractor shall be fully responsible for settlement or deterioration of the finished crossing until a period of two years after final acceptance by the City.

Where casing is not required but is used at the option of the Contractor, the casing and the backfill between the pipe or conduit and the casing shall be included in the pay item for Boring or Jacking as applicable, and no separate payment for pipe will be made.

209 RESURFACING

209.01 DESCRIPTION

This section covers the work necessary to replace all pavement, pavement base, curbs, sidewalks, rock surfacing, and other surface features damaged either directly or indirectly by the operations incidental to the construction of sewers, storm drains, water distribution systems, and conduits.

209.02 MATERIALS

209.02.01 Asphalt Concrete

Use hot mix asphalt concrete Class C mix conforming to the requirements for hot mix asphalt concrete shall conform to ODOT’s standard.

209.02.02 Pavement Base

Use pavement base material for resurfacing trenches which conform to Section 503 (Aggregate Bases).

209.02.03 Forms

All forms shall conform to requirements for forms in Division 7 (Concrete Structures Construction Standards).

209.02.04 Rock Surfacing

Rock surfacing shall be 1½-inch or 1-inch minus crushed aggregate as specified in Subsection 204.02.05 (Class B Backfill, Crushed Aggregate [¾”-0 or as specified]).

209.02.05 Subgrade

Subgrade material shall conform to the requirements for subgrade in Section 501 (Subgrade).

209.02.06 Joint Materials

A. Preformed Elastomeric Joint Seals

Preformed elastomeric joint seals shall conform to the requirements of AASHTO M 220.

B. Poured Filler

Poured filler for concrete joints shall conform to the requirements of AASHTO M 173 (ASTM D 1190).

C. Rubber Gaskets for Concrete Pipe and Precast Section Joints

Rubber gaskets for use in concrete pipe and precast manhole section joints shall conform to the requirements of AASHTO M 198 except that rubber gaskets for use in concrete siphon pipe joints shall conform to the composition and property requirements set forth in ASTM C 361.

D. Joint Mortar for Concrete Pipe Joints and Precast Manhole Section Joints

Joint mortar shall consist of 1 part Portland Cement and 2 parts approved sand with water as necessary to obtain the required consistency. Mortar shall be used within 30 minutes after its preparation unless conditions during use necessitate a shorter time.

E. Plastic Compound for Precast Manhole Section Joints

Compound for use in precast manhole section joints shall be a putty-like, preformed homogeneous blend of hydrocarbon resins and rubber or plasticizing materials with not more than 50% by weight of inert mineral filler. The compound shall be specifically manufactured for the intended use and shall be pliable at temperatures between 32°F and 135°F. A specimen at 77°F and ½" square in cross section shall stretch at least 1½ inches before rupture when tested with the apparatus described in ASTM D 113. It shall adhere firmly and cohesively to the precast manhole sections when the compound-sealed joint is flexed to its maximum extent. The compound shall be accompanied by and used with such primer solution as the manufacturer of the compound may recommend. Compound conforming to Federal Specification SS-S-00210 (GSA-FSS) is representative of an acceptable material.

F. Water Stop

Water stop shall be either plastic or rubber as the Contractor may elect conforming to the following.

1. Plastic

Polyvinylchloride water stop shall be manufactured to the dimensions called for on the plans from virgin polyvinylchloride (PVC) compound. No reclaimed PVC will be allowed. The water stop shall have the following properties.

	ASTM Test Method	Specification
Tensile, PSI	D 412	1800
Elongation %	D 412	350
100% Modulus, PSI	D 412	760
Low Brittle Temperature	D 746	50°F
Cold Bend Test*	No Failures	

*Samples maintained at -70°F for 2 hours, then bent quickly around a ¼" mandrel to 180°.

The supplier shall furnish test samples of the material from which their water stop is to be manufactured. Samples shall be in sheet form having a uniform thickness of from 1/16 to ⅛ inch and having a total area of not less than 2 sq. ft. Each sample shall be comprised of pieces not smaller than 6 in. x 6 in.

2. Rubber

Rubber water stop shall be manufactured to the dimensions shown on the plans in such a manner that the finished product shall have an integral cross section which will be dense, homogeneous, and free from porosity and other imperfections. The water stop shall have the following properties.

Hardness: The shore A Durometer hardness shall be 60 to 70 when tested in accordance with ASTM D 2240.

Elongation: Minimum of 450%.

Tensile strength: Minimum of 3000 pounds per square inch.

Water absorption: Maximum of 55% by weight after immersion in water for two days at 158°F.

Tensile strength after aging: The test specimen, after accelerated aging of 7 days at 158°F, shall retain not less than 80% of the original tensile strength. The tensile strength of the test specimen, after accelerated aging of 48 hours in oxygen at 158°F and tensile stress of 300 pounds per square inch, shall be not less than 80% of the original tensile strength.

Compression set: After 22 hours at 158°F shall be not more than 30% when tested in accordance with ASTM D 395, method B.

Specific gravity: 1.17 ± 0.03.

Defects: Minor surface defects such as surface peel covering less than 1 square inch, surface cavities or bumps less than ¼ inch in longest lateral dimensions and less than 1/16 inch deep will be acceptable.

209.03 CONSTRUCTION

209.03.01 Street Maintenance

Maintain all trenches as specified under Section 204 (Excavation, Embankment, Bedding, and Backfill).

209.03.02 Temporary Cold Mix Asphalt

All excavations on hard surfaces shall be paved with a temporary cold mix asphalt patch at the end of each workday.

Place and compact temporary cold mix asphalt to a minimum depth of 2 inches over the backfilled and compacted trench areas as specified under Section 204 (Excavation, Embankment, Bedding, and Backfill). Spread with a mechanical spreading machine, or place by hand methods. Distribute into place by means of shovel or suitable forks and spread with rakes in a loose layer of uniform density.

After spreading, the mixture shall be thoroughly and uniformly compacted with a power-driven roller capable of providing compression of 200 to 300 pounds per linear inch as soon as raking is complete. Compact areas inaccessible to the roller by tamping. After compaction, the temporary cold mix asphalt shall have the minimum thickness specified and shall match the adjacent existing grade. The temporary cold mix asphalt patch shall be maintained such that a continuous surface will exist without depressions or potholes.

209.03.03 Pavement Base

Place pavement base to the specified depth; when not specified, place to a compacted depth of 12 inches. Bring the top of the pavement base to a smooth, even grade at a distance below finished grade equivalent to the required pavement depth.

Compact the pavement base with mechanical vibratory or impact tampers to a density of not less than 95% of the maximum dry density as determined by ASTM D1557/AASHTO T-180.

209.03.04 Asphalt Concrete Pavement

A. Tack Coat

Tack coat all edges of existing pavement, manhole, and clean-out frames, inlet boxes and like items. Apply an asphalt tack coat to the base lift of asphalt at a rate of 0.05 to 0.15 gallons per square yard prior to placing the second lift when the time between placing the second lift is greater than 4 hours after placement of the initial lift.

B. Asphalt Concrete Placement

Saw cut the existing pavement a minimum of 6 inches from the edge of the existing pavement at the side of the trench. The saw cut shall be a straight line and shall follow lines parallel to the pipe centerline to remove any pavement which has been damaged or which is broken and unsound. The saw-cut pavement edges shall be free of irregularities. Provide a smooth, sound edge for joining the new pavement. Excavate the material immediately below the cutback area and replace with 1"-0" compacted crushed gravel base.

Place the asphalt concrete on the prepared subgrade over the trench to the specified depth, or the depth of the adjacent pavement, whichever is greater. When a prime coat is specified, place asphalt concrete after the prime coat has set. Place the asphalt concrete in a minimum of 2 lifts. Maximum thickness for any 1 lift of pavement shall not exceed 2½ inches. The minimum thickness for placement of compacted pavement shall not be less than 1 inch. Spread and level the asphalt concrete with hand tools or by use of a mechanical spreader, depending upon the area to be paved. Bring the asphalt concrete to the proper grade and compact by rolling or the use of hand tampers where rolling is impossible or impractical.

Roll with power rollers capable of providing compression of 200 to 300 pounds per linear inch. Begin the rolling from the outside edge of the replacement progressing toward the existing surfacing, lapping the existing surface at least half the width of the roller. If existing surfacing bounds both edges of the replacement, begin rolling at the edges of the replacement, lapping the existing surfacing at least half the width of the roller, and progress toward the center of the replacement area. Overlap each preceding track by at least half the width of the roller and make sufficient passes over the entire area to remove all roller marks and to produce a smooth, uniform surface. Density requirements for asphalt concrete pavement shall conform to those in Section 505 (Asphalt Concrete Pavement).

Finished surface of the new compacted paving shall be flush with the existing surface and conform to the grade and crown of the adjacent pavement.

C. Seal Coat

Immediately after the new paving is completed, apply a seal coat of liquid asphalt conforming to Subsection 205.02.13 (Asphalt Materials) to all joints between the new and original asphalt pavement. The seal coat shall be a minimum of 12 inches in width and shall be centered on the joint. The liquid asphalt shall be applied to the point that it begins to run off. The minimum application rate shall be 1.7 gallons per 100 linear feet.

Immediately after the liquid asphalt has been applied and before the asphalt has solidified, cover the seal coat asphalt with clean-dry masonry sand. The sand shall be applied in a layer thick enough to prevent tracking of seal coat. Before opening the street to traffic, the Contractor shall clean up all loose sand.

D. Surface Smoothness

The top surface of the asphalt concrete pavement, when tested with a 12-foot straightedge furnished and operated by the Contractor, shall not vary by more than 0.02 foot either parallel to or perpendicular to the centerline. The City Engineer will observe this testing and may require additional testing. The means of correction of a surface that does not meet the smoothness requirements shall have the approval of the City Engineer.

When tests show the pavement is not within the above tolerances, the Contractor shall take immediate action to correct equipment or procedures in their paving operation to eliminate the unacceptable pavement roughness.

Any surface irregularities exceeding the above tolerances shall be corrected by the Contractor using a method or methods listed herein and approved by the City Engineer.

Corrective Action - Corrective measures by the Contractor requiring one or more of the following actions approved by the City Engineer shall be performed on deficient areas.

1. Remove and replace the surface course.
2. Place an overlay of a thickness approved by the City Engineer.
3. Grind the pavement surface utilizing diamond blades up to maximum depth of 0.3 inch and apply an emulsion fog coat as directed by the City Engineer.

All corrective work shall be completed within 10 working days following notification from the City Engineer that the pavement does not meet the specified tolerances, unless otherwise directed by the City Engineer.

All corrective work, including furnishing of materials, shall be performed at the Contractor's expense and no adjustment in contract time will be made for corrective action work.

E. Weather Conditions

Asphalt concrete mixtures shall be placed on dry prepared surfaces when the air temperature in the shade and the surface temperature is not less than those specified in the following table.

SURFACE TEMPERATURE LIMITATIONS

Compacted Thickness of Individual Courses	Travel Lanes/ Wearing Course	All Other Courses
Less than 1½ inches	60°F	55°F
1½ inches to 2½ inches	50°F	45°F Over
2½ inches and other	40°F	35°F

Placing of any mixture during rain or other adverse weather conditions normally will not be permitted, except that mix in transit at the time these adverse conditions occur may be laid if the mix is of proper temperature, if the mix has been covered during transit, if placed on a foundation free of pools, or flow of water and if all other requirements of these specifications are met. Asphalt concrete mixtures shall not be placed when the underlying layer is frozen, or when, in the opinion of the City Engineer, weather conditions either existing or expected will prevent the proper handling, finishing, or compaction of the mixtures.

Do not apply asphalt for tack coat when the surface temperature is less than 50 degrees F.

F. Protection of Structures

Provide whatever protective coverings may be necessary to protect the exposed portions of bridges, culverts, curbs, gutters, posts, guard fences, road signs, and any other structures from splashing oil and asphalt from the paving operations. Remove any oil, asphalt, dirt, or any other undesirable matter that may come upon these structures by reason of the paving operations.

Where existing structures (e.g., water valve boxes, manholes, catch basins, or other underground utility appurtenances) are within the area to be surfaced, make the resurfacing level with the top of the existing finished elevation of these facilities. The Contractor shall be responsible for adjusting the existing structures as specified in Section 511 (Adjustment of Existing Structures to Grade). Consider any delays experienced from such obstructions as incidental to the paving operation. No additional payment will be made. Protect all covers during asphalt application.

G. Excess Materials

Dispose of all excess materials. Make arrangements for the disposal and bear all costs or retain any profit incidental to such disposal.

209.03.05 Portland Cement Concrete Pavement

Pavement replaced shall be the same thickness as that removed, or a minimum of 6 inches. Protect the newly placed concrete from traffic for a period of at least 7 days.

Saw cut the existing pavement a minimum of 6 inches from the edge of the existing pavement at the side of the trench. The saw cut shall be a straight line following lines parallel to the pipe centerline and shall remove any pavement which has been damaged or which is broken and unsound. The saw cut pavement edges shall be free of irregularities. Provide a smooth, sound edge for joining the new pavement.

Handle, place, finish and cure concrete pavement in conformance with the applicable provisions of Section 506 (Portland Cement Concrete Pavement).

209.03.06 Rock Surfacing

Place rock surfacing only where shown or directed on streets, driveways, parking areas, street shoulders, and other areas disturbed by the construction. Spread the rock by tailgating and supplement by hand labor where necessary. Level and grade the rock surfacing to conform to adjacent existing grades and surfaces as directed.

209.03.07 Concrete Driveways, Sidewalks, and Curbs

Replace concrete driveways, sidewalks, and curbs to the same section, width, depth, line, and grade as that removed or damaged. Saw broken or jagged ends of existing concrete on a straight line and to a vertical plane. Prior to replacing the concrete sections properly backfill and compact the backfill to prevent subsequent settlement.

Replace concrete driveways and sidewalks between scored joints unless otherwise directed by the City Engineer. Provide a minimum 2-inch thick compacted leveling course of clean ¾" - 0" minus crushed aggregate. All concrete replacement work shall be completed prior to the placement of adjacent asphalt concrete. Restoration and clean up shall be as specified under Section 207 (Restoration and Cleanup).

Construct forms to match existing. Place concrete and finish exposed surfaces similar to adjacent surface in conformance with Section 507 (Curbs, Gutters, Driveways, and Sidewalks).

END OF DIVISION

DIVISION 3—SANITARY SEWER CONSTRUCTION STANDARDS

TABLE OF CONTENTS

301 PIPE AND FITTINGS (SANITARY SEWER) 1

301.01 DESCRIPTION 1

301.02 MATERIALS 1

301.02.01 General 1

301.02.02 Concrete Pipe 1

A. Nonreinforced Concrete Pipe 1

B. Reinforced Concrete Pipe 1

301.02.03 Ductile-Iron Pipe 2

301.02.04 PVC Nonpressure Pipe 2

301.02.05 PVC Pressure Pipe 2

301.02.06 HDPE Pipe 2

301.02.07 Service Connection Markers 2

301.02.08 Jointing Materials 2

A. Concrete Pipe 2

B. Cast-Iron and Ductile-Iron Pipe 2

C. PVC Pipe 2

D. HDPE Pipe 2

301.02.09 Proof Tests 2

A. General 2

B. Concrete Pipe 3

C. Cast-Iron Pipe and Ductile-Iron Pipe 3

D. PVC Pipe 4

301.02.10 Fittings 4

A. General 4

B. Concrete Pipe 4

C. Cast-Iron and Ductile-Iron Pipe 4

D. PVC Pipe 4

E. HDPE Pipe 4

301.02.11 Pipe Coupling Adapters 4

A. Concrete Pipe, PVC Pipe, Cast-Iron Pipe, and Ductile-Iron Pipe 4

B. HDPE Pipe 4

301.02.12 Cleanouts 5

301.03 CONSTRUCTION 5

301.03.01 Excavation and Backfill 5

301.03.02 Line and Grade for Gravity and Pressure Sewers 5

A. Line and Grade for Service Line Sewers 5

301.03.03 Pipe Distribution and Handling 5

301.03.04 Pipe Laying and Jointing of Pipe and Fittings 5
A. General 5
B. Concrete Pipe 6
301.03.05 Installation of Service Line Sewers, Tees, and Wyes 6
301.03.06 Markers 6
301.03.07 Concrete Closure Collars 7
301.03.08 Disconnection and Reconnection of Existing Service Lines 7
301.03.09 Testing 7
A. General 7
B. Cleaning Prior to Testing and Acceptance 7
C. Testing Procedure 7
D. Time of Test 8
E. Repairs 8
F. Air Testing 8
301.03.10 Deflection Test for PVC Pipe 9
301.03.11 Television Inspection of Sanitary Sewers 10
301.03.12 Subsequent Failure 10
301.03.13 Cleanouts 10
301.03.14 Service Risers 10
301.03.15 Rail Lines Crossing Sanitary Sewer 10

302 MANHOLES AND CONCRETE STRUCTURES 10

302.01 DESCRIPTION 10
302.02 MATERIALS 10
302.02.01 Base Rock 10
302.02.02 Forms 11
302.02.03 Concrete and Reinforced Steel 11
302.02.04 Cement Mortar 11
302.02.05 Manholes 11
A. Standard Precast Manhole Sections 11
B. Precast Concrete Bases 11
C. Poured in Place Manhole Bases 11
D. Manhole Grade Rings 11
E. Jointing Materials 11
302.02.06 Pipe and Fittings 11
302.02.07 Manhole and Cleanout Frames and Covers 11
A. General 11
B. Materials 12
C. Inspection 12
D. Cap Screws 12
302.02.08 Steps for Precast Manholes 12
302.02.09 Nonshrink Grout 13

302.03 CONSTRUCTION 13
302.03.01 General 13
A. Excavation and Backfill 13
B. Base Rock 13
C. Foundation Stabilization 13
302.03.02 Manholes 13
302.03.03 Drop Assemblies 13
302.03.04 Pipe Stubouts and Manholes 14
302.03.05 Manhole Grade Rings 14
302.03.06 Adjustment of Manholes and Cleanouts to Grade 14
302.03.07 Vacuum Testing 14
302.03.08 Concrete Encasement for Sanitary Sewer 15
302.03.09 Special Concrete Structures 15
302.03.10 Placing Precast Units 15
302.03.11 Cleaning 15

303 WORK ON EXISTING SANITARY SEWERS 16

303.01 DESCRIPTION 16
303.02 MATERIALS 16
303.02.01 Prefabricated Inside Drops (Oregon Drops) 16
303.03 CONSTRUCTION 16
303.03.01 Excavation and Backfill 16
303.03.02 Manholes Over Existing Sewers 16
303.03.03 Connection to Existing Main 16
303.03.04 Removal of Existing Pipes, Manholes, and Appurtenances 17
303.03.05 Filling Abandoned Manholes, Inlets, and Catch Basins 17
303.03.06 Existing Manhole Frames and Covers 17
303.03.07 Permanent Plugs 17
303.03.08 Adjusting Existing Structures to Grade 17
303.03.09 Reconstruct Manhole Base 17
303.03.10 Connect Pipe to Existing Inlets 18
303.03.11 Connection to Existing Manholes 18

301 PIPE AND FITTINGS (SANITARY SEWER)

301.01 DESCRIPTION

This section covers the following work: (1) gravity and pressure sewer pipe, (2) fittings, and (3) service line sewers.

301.02 MATERIALS

301.02.01 General

Use all sewer pipe and fittings of the size, strength, material and joint type specified on the drawings and/or the proposal. Use jointing material as hereinafter specified for each pipe material. Each piece of pipe shall be clearly identified as to strength, class and date of manufacture. The manufacturer or fabricator shall furnish appropriate certification, based on manufacturer's routine quality control tests, that the materials in the pipe and fittings meet the requirements specified herein. Strength, permeability, hydrostatic tests, and pipe joints will be used as the basis of acceptance as described under proof tests herein. Minimum length of pipe shall be 3.5 feet.

It is not intended that materials listed herein are to be considered equal or generally inter changeable for all applications. The Design Engineer shall determine the materials suitable for the project and so specify.

301.02.02 Concrete Pipe

A. Nonreinforced Concrete Pipe

Nonreinforced concrete pipe shall conform to ASTM C 14, Class 3 as shown or specified and the following additional requirements:

1. Cement shall be Type II conforming to ASTM C 150.
2. The minimum Portland Cement content shall be 564 pounds per cubic yard.
3. The water/cement ratio shall not exceed 0.49.
4. The Contractor shall provide the City Engineer with a Certificate of Compliance from the pipe manufacturer that the pipe and concrete mix conform in all respects to these specifications and other nonconflicting requirements of the referenced ASTM Specifications.

B. Reinforced Concrete Pipe

Reinforced concrete pipe shall conform to ASTM C 76, Class IV as shown or specified with Wall B design and the following additional requirements:

1. Cement shall be Type II conforming to ASTM C 150.
2. The minimum Portland Cement content shall be 564 pounds per cubic yard.
3. The water/cement ratio shall not exceed 0.49.
4. Elliptical reinforcing is not permitted.
5. The area of the outer circular reinforcing cage shall not be less than 75% by the inner cage.
6. The Contractor shall provide the City Engineer with a Certificate of Compliance from the pipe manufacturer that the pipe and concrete mix conform in all respects

to these specifications and other nonconflicting requirements of the referenced ASTM Specifications.

301.02.03 Ductile-Iron Pipe

Ductile-iron pipe centrifugally cast of 60-42-10 iron shall conform to ANSI A21.51 Class 150 or AWWA C151, with Push-on Joint or Mechanical Joints as specified, conforming to ANSI Specification A21.11/AWWA C111. Ductile-iron pipe shall be lined with cement mortar and seal coated in accordance with ANSI Standard A21.4/AWWA C104.

When specified, tube type polyethylene encasement shall conform to ANSI A21.5/AWWA C105.

301.02.04 PVC Nonpressure Pipe

PVC sewer pipe shall conform to ASTM D 3034 SDR 35.

301.02.05 PVC Pressure Pipe

PVC pressure pipe shall conform to AWWA C900 Class as specified.

301.02.06 HDPE Pipe

HDPE pipe sizing shall conform with ASTM F714 or D3035. HDPE pipe material shall conform to ASTM D 3350. Pipe size and pipe dimension ratio shall be specified in the plans.

301.02.07 Service Connection Markers

New 2" x 4" utility grade lumber, or better, in one piece shall be used and painted green. No splicing will be permitted.

301.02.08 Jointing Materials

Only lubricants for jointing materials approved by the manufacturer shall be used.

Furnish in duplicate a certified statement from the manufacturer of the gaskets, setting forth the basic polymer used in the gaskets and results of the tests of the physical properties of the compound. Gaskets shall be shipped in containers with identification of the batch from which the gaskets were fabricated.

A. Concrete Pipe

All pipes shall be bell and spigot. Rubber gaskets for bell and spigot pipe shall conform to ASTM C 443. Use captive gasket in groove design for pipe 24-inch diameter and larger.

B. Cast-Iron and Ductile-Iron Pipe

Rubber gaskets shall conform to ANSI A21.11/AWWA C111.

C. PVC Pipe

Rubber gaskets for PVC pipe shall conform to ASTM F 477.

D. HDPE Pipe

HDPE pipe shall be joined via butt fusion welds in accordance with ASTM F 2620. The technician performing butt fusion welds shall be certified by the manufacturer or other certifying agency.

301.02.09 Proof Tests

A. General

The intent of this requirement is to prequalify a joint system, components of which meet the joint requirements, as to the water tightness capability of that joint system. This proof test shall be

understood to apply to all sanitary sewers. Material and test equipment for proof testing shall be provided by the manufacturer. Joints shall meet the requirements of yard testing specified below. The pipe manufacturer shall submit results of the yard tests made, certified by a testing agency acceptable to the City Engineer. In general, each pipe material and joint assembly shall be subject to the following three proof tests at the discretion of the City Engineer.

1. Pipe in Straight Alignment

No less than 3 nor more than 5 pipes selected from stock by the City Engineer or the testing agency shall be assembled according to the manufacturer's installation instructions with the ends suitable plugged and restrained against internal pressure. The pipe shall be subjected to 13-PSI hydrostatic pressure for 10 minutes. Free movement of water through the pipe joint or pipe shall be grounds for rejection of the pipe.

2. Pipe in Maximum Deflected Position

A test section shall be deflected as described hereinafter for each pipe material. The pipe shall be subjected to 10-PSI hydrostatic pressure for 10 minutes. Free movement of water through the pipe joint or pipe wall shall be grounds for rejection of the pipe.

3. Joints Under Differential Load

The test section shall be supported on blocks or otherwise as described hereinafter for each pipe material. There shall be no visible leakage when the stressed joint is subjected to 10-PSI internal hydrostatic pressure for 10 minutes.

B. Concrete Pipe

For deflected position, create a position ½ inch wider than the fully assembled position, on 1 side of the outside perimeter of each joint.

For differential load test, assemble 3 pipes according to the manufacturer's instructions in straight alignment with the ends suitably plugged and restrained against internal hydrostatic pressure. The end pipes of the test section shall be supported on blocks or otherwise so that the center pipe is suspended freely between the adjacent pipe and bearing only the joints. The pipe section shall be filled with water and a load of 150 pounds per inch of pipe diameter, in addition to the weight of the pipe, shall be supplied over an arc of not less than 120 degrees along a longitudinal distance of 12 inches immediately adjacent to 1 of the joints. For pipe 24-inch and larger, the applied load shall be reduced by half of the weight of water in the suspended pipe.

C. Cast-Iron Pipe and Ductile-Iron Pipe

For deflected position, create a position ½ inch wider than the fully compressed section on 1 side of the outside perimeter.

For differential load, support so that one of the pipes is suspended freely between an adjacent pipe, load bearing only on the joints. Apply a force per the following table along a longitudinal distance of 12 inches, immediately adjacent to 1 of the joints.

PIPE SIZE	FORCE - POUNDS	PIPE SIZE	FORCE - POUNDS
4 inches	1,000	15 inches	3,700
6 inches	1,500	18 inches	4,400
8 inches	2,000	21 inches	5,000
10 inches	2,500	24 inches	5,500
12 inches	3,000	and over	----

D. PVC Pipe

PVC pipe joints shall be tested by and meet the requirement of ASTM C 3212 for gravity sewers and ASTM D 3139 for pressure sewers.

301.02.10 Fittings

A. General

Provide tee or wye fittings in the sewer main for service line sewers and catch basin or inlet connections. Tee and wyes for service line sewers shall be 4 inches inside diameter, unless otherwise specified. All fittings shall be of sufficient strength to withstand all handling and load stresses encountered. All fittings shall be of the same materials as the pipe unless otherwise specified. Material joining the fittings to the pipe shall be free from cracks and shall adhere tightly to each joining surface. Use the same type of joints on all fittings that are used on the main sewer pipe. Tee or wye fittings shall not be closer than 12 inches to any joint or bell of main line sewer which is 12 inches or less in diameter.

B. Concrete Pipe

Use shop fabricated fittings on all concrete pipe.

Submit fabrication details for shop-fabricated fittings for review prior to delivery of fittings to the job site.

C. Cast-Iron and Ductile-Iron Pipe

Use mechanical joint cast-iron fittings conforming to ANSI A21.10/AWWA C110, and a class of at least equal to that of the adjacent pipe. Use push-on fittings of gray cast iron with body thickness and radii of curvature conforming to ANSI A21.10 and joints conforming to ANSI A21.11/AWWA C111.

D. PVC Pipe

PVC pipe shall be connected to sanitary manholes using an approved adapter specifically manufactured for the intended service and approved by the City Engineer. PVC pipe adapters shall be Fernco CMA, Romac LCT, Tylox Manhole Adapters, Vassalo Series 32850, Kor-N-Seal, Sealtite, Z-Lok-XP, or equal commercial product. Field-fabricated waterstops or improvised adapters such as gaskets stretched over the pipe will not be allowed.

Adapters requiring the use of grout for installation shall be anchored and finished using an approved nonshrink grout. Mortar is not acceptable.

E. HDPE Pipe

Polyethylene fittings shall be manufactured in accordance with ASTM D 3261 for molded polyethylene fittings and ASTM F 1055 for electrofusion polyethylene fittings.

301.02.11 Pipe Coupling Adapters

A. Concrete Pipe, PVC Pipe, Cast-Iron Pipe, and Ductile-Iron Pipe

Use flexible mechanical compression joint coupling with No. 305 stainless steel bands manufactured by Joints, Inc., Fernco Joint Sealer, or approved equal.

B. HDPE Pipe

Electrofusion couplers shall be used to join pipe between manholes. Electrofusion couplers shall conform to ASTM F 1055.

301.02.12 Cleanouts

Cleanouts will be of the same material and size as the main line.

301.03 CONSTRUCTION

301.03.01 Excavation and Backfill

Conform to the requirements of Section 204 (Excavation, Embankment, Bedding, and Backfill). All excavation shall be unclassified.

301.03.02 Line and Grade for Gravity and Pressure Sewers

Do not deviate from line or grade, as established by the Design Engineer, more than ½ inch for line and ¼ inch for grade, provided that such variation does not result in a level or reverse sloping invert. Measure for grade at the pipe invert, not at the top of the pipe, because of permissible variation in pipe wall thickness. Establish line and grade for pipe by the use of lasers or by transferring the cut from the offset stakes to batter boards at maximum intervals of 25 feet.

A. Line and Grade for Service Line Sewers

The Design Engineer will establish line and grade to the tract of land to be serviced by the sewer system. At the preselected location of the service line, a stake will be driven into the ground showing the depth of excavation required at the property line.

Lay the pipe on a straight line and at a 2% grade between the tee or riser and the stake. Lay the pipe by means of a builder's level of good quality and not less than 24 inches in length.

301.03.03 Pipe Distribution and Handling

Distribute material on the job no faster than it can be used to good advantage. Unload pipe only by means recommended by the pipe manufacturer. Do not unload pipe of any size by dropping to the ground. Do not distribute more than 1 week's supply of material in advance of laying, unless approved.

Pipe shall not be unloaded or stored in the public right-of-way or easement unless it has been certified and accepted by the Design Engineer. Inspect all pipe and fittings prior to lowering into trench to ensure no cracked, broken, or otherwise defective materials are used. Clean ends of pipe thoroughly. Remove foreign matter and dirt from inside of pipe and keep clean during and after laying.

Use proper implements, tools, and facilities for the safe and proper protection of the work. Lower pipe into the trench in such a manner as to avoid any physical damage to the pipe. Remove all damaged pipe from the job site. Do not drop or dump pipe into trenches.

301.03.04 Pipe Laying and Jointing of Pipe and Fittings

A. General

Proceed with pipe laying upgrade with spigot or tongue ends pointing in direction of flow. Place pipe in such a manner as to ensure a continuous and uniform bearing and support for the full length of the pipe between joints. Take care to properly align the pipe before forced entirely home. Upon completion of pipe laying all pipe joints shall be in the "home" position, which is defined as the position where the least gap (if any) exists, when the pipe components that comprise the join are fitted together as tightly as the approved joint design will permit. Gaps at pipe joints shall not exceed that allowed by the manufacturer's recommendations.

Take special care to prevent movement of the pipe after installation when laid within a movable trench shield.

When laying operations are not in progress, protect the open end of the pipe from entry of foreign material and block the pipe to prevent movement or creep of gasketed joints.

Plug or close off pipes which are stubbed out for manhole construction or for connection by others.

Provide all sewer pipes, 36 inches or smaller in diameter, entering or leaving manholes or other structures, with flexible joints within 18 inches of the exterior wall. Pipes larger than 36 inches in diameter shall have this flexible joint within a distance from the exterior wall equal to half the inside pipe diameter.

When cutting and/or machining the pipe is necessary, use only tools and methods recommended by pipe manufacturer.

When shown or approved to deflect pipe from a straight line, either in the vertical or horizontal plan, or when long-radius curves are shown, the amount of deflection shall not exceed that specified or approved by the City Engineer. The pipe manufacturer's recommendation will serve as a guide, but the decision of the City Engineer shall be final.

B. Concrete Pipe

Use rubber ring gasket joints.

301.03.05 Installation of Service Line Sewers, Tees, and Wyes

Install tee and wye fittings for service line sewers as shown on the standard drawings no. 308 and 309. Provide pipe bedding material compacted to a minimum of 90% of maximum density as determined by ASTM D 1557/AASHTO T-180 under all tees and wyes and branch fittings, extending to the springline of the fittings. Place pipe bedding material on undisturbed native material or compacted foundation stabilization material.

Use pipe and fittings for service lines of one type of material throughout; no interchanging of pipe and fittings will be allowed. Use 4 inch diameter pipe for residential services when not otherwise specified.

Connect service lines to manholes only when directed. Make the connection so the standard pipe joint is located not more than 1.5 feet from the structure.

Provide ends of all service lines and fittings with approved watertight plugs, caps, or stoppers, suitably braced to prevent blowoff during internal air testing. Such plugs or caps shall be removable and their removal shall provide a socket suitable for making a flexible joint lateral connection or extension.

301.03.06 Markers

In new subdivisions, undeveloped areas, and where connections will not be made in the Contract, after the service line is installed, block the capped or plugged end and install 2" x 4" marker. Extend markers at least 4 feet above the ground surface. Paint the top portion of the marker after its installation with first-quality green, quick-drying enamel. After the paint has dried, use black, quick-drying enamel and neatly indicate the distance from the natural ground surface to the top of the service line pipe in feet and inches.

Take precautions during the backfilling operation to ensure the position and location of the marker. If the marker is broken or knocked out of vertical alignment during the backfilling operation, reopen the trench and replace the marker.

In new subdivisions, at the time the curbs are poured, an S shall be stamped in the top of curb at each point a lateral crosses beneath the curbline.

301.03.07 Concrete Closure Collars

Only where specified on drawings, construct concrete closure collars in conformance with the details provided. Wash pipe to remove all loose material and soil from the surface on which the concrete will be placed. Construct forms with materials that will ensure that no concrete shall enter the line. Make entire collar in 1 placement, and do not place collars in water. Concrete closure collars shall be placed using an approved commercial concrete bonding agent applied to all surfaces in contact with the collar. Where concrete closure collars are necessary to join PVC pipe, the PVC surface shall first be prepared for bonding to the concrete by applying a dense coating of clean mortar sand to the pipe using PVC solvent cement. After the cement has cured, commercial concrete bonding agent shall be applied to the sand surface prior to placement of concrete. Water as a substitute for commercial bonding agent will not be allowed. Do not backfill the trench until the concrete has sufficient strength.

301.03.08 Disconnection and Reconnection of Existing Service Lines

When shown or directed, disconnect existing service lines from existing sewers and reconnect them to the new sewers. The Contractor shall be responsible for locating the existing service lines prior to installing the tee or wye in the new sewer line. The Contractor shall verify and reconnect all active services to the main line sewer.

301.03.09 Testing

A. General

All gravity sanitary sewers including service line sewers and appurtenances shall successfully pass an air test prior to acceptance and shall be free of leakage. Manholes shall be tested as specified in Section 302 (Manholes and Concrete Structures).

All pressure sewer force mains shall be tested in accordance with applicable portions of Section 403 (Construction), when not otherwise specified.

Line shall be cleaned prior to any televised inspection.

A televised inspection of the sanitary sewer pipe shall be performed. Any defects in material or workmanship shall be satisfactorily corrected prior to final acceptance of the work.

B. Cleaning Prior to Testing and Acceptance

Prior to final testing, acceptance and final manhole-to-manhole inspection of the sewer system by the City Engineer, ball, flush and clean all parts of the system. Remove all accumulated construction debris, rocks, gravel, sand silt, and other foreign material from the sewer system at or near the closest downstream manhole. If necessary, use hydrocleaning.

Upon the City Engineer's final manhole-to-manhole inspection of the sewer system, if any foreign matter is still present in the system, reflush and clean the sections and portions of the lines as required.

C. Testing Procedure

Perform the tests in a manner satisfactory to the City Engineer. Any arrangement of testing equipment which will provide observable and accurate measurements of air leakage under the specified conditions will be permitted. Calibrate gauges for air testing with a standardized test gauge provided by the Contractor at the start of each testing day. The calibration shall be witnessed by the City Engineer; notify the City Engineer 24 hours prior to each test.

D. Time of Test

Make tests of sections of constructed sanitary sewer for acceptance only after all service connections, manholes, backfilling, and compaction are completed between the stations to be tested. City may require testing of manhole-to-manhole sections as they are completed in order to expedite the acceptance of sections of sewer and allow connections prior to the whole system being completed.

E. Repairs

Repair or replace, in a manner satisfactory to the City Engineer, any section of pipe not meeting the air test requirements, or which has leakage.

Infiltration of ground water in an amount greater than herein specified, following a successful air test as specified, shall be considered as evidence that the original test was in error or that subsequent failure of the pipeline has occurred. Correct such failures occurring within the warranty period in a manner satisfactory to the City Engineer at the Contractor's sole expense.

The Contractor, in contracting to do this work, agrees that the leakage allowances as indicated herein are fair and practical.

F. Air Testing

1. General

The City Engineer may, at any time, require a calibration check of the instrumentation used. Use a pressure gauge having minimum divisions of 0.10 PSI and an accuracy of 0.0625 PSI. (1 ounce per square inch.) All air used shall pass through a single control panel.

All plugs used to close the sewer for the air test must be capable of resisting the internal pressures and must be securely braced. Place all air testing equipment above ground and allow no one to enter a manhole or trench where a plugged sewer is under pressure. Release all pressure before the plugs are removed. The testing equipment used must include a pressure relief device designed to relieve pressure in the sewer under test at 10 PSI or less and must allow continuous monitoring of the test pressures in order to avoid excessive pressure. Use care to avoid the flooding of the air inlet by infiltrated ground water. (Inject the air at the upper plug if possible.) Use only qualified personnel to conduct the test.

Do not coat pipes for sewers internally or externally with any substance of any type in an attempt to improve its performance when air tested.

2. Ground Water

The presence of ground water will affect the results of the test. Determine the average height of ground water over the sewer immediately before starting the test.

In every case, determine the height of the water table at the time of the test by exploratory holes or such other methods satisfactory to the City Engineer. The City Engineer will make the final decisions regarding test height for the water in the pipe section being tested.

3. Method

Use the Time-Pressure Drop Method for all air testing. The test procedures are described as follows:

1. Clean the sewer to be tested and remove all debris where noted.

2. Wet the sewer prior to testing, if desirable.

3. Plug all sewer outlets with suitable test plugs. Brace each plug securely.

4. Check the average height of the ground water over the sewer. The test pressures required below shall be increased 0.433 PSI for each foot of average water depth over the sewer.

5. Add air slowly to the section of sewer being tested until the internal air pressure is raised to 4.0 PSIG greater than the average back pressure of any ground water that may submerge the pipe.

6. After the internal test pressure is reached, allow at least 2 minutes for the air temperature to stabilize, adding only the amount of air required to maintain pressure.

7. After the temperature stabilization period, disconnect the air supply.

8. Determine and record the time in seconds that is required for the internal air pressure to drop from 3.5 PSIG to 2.5 PSIG greater than the average back pressure of any ground water that may submerge the pipe.

4. Acceptance

The sewer shall be considered acceptable when tested as described herein before if the section under test does not lose air at a rate greater than 0.0015 cfm per square foot of internal sewer surface.

For test sections containing over 625 square feet of surface area, the time measured by this method for 1.0 PSI pressure drop shall be calculated according to the following formula:

$T = d^2L/42$

T = test duration, seconds
d = pipe diameter, inches
L = section length, feet
42 = conversion factor

For test sections containing less than 625 square feet of internal surface area, the time measured by this method for 1.0 PSI pressure drop shall be calculated according to the following formula:

$T = 56d$

The internal surface area of pipeline sections may be calculated using the formula:

$A = \pi Ld/12$

The surface areas of lateral lines of differing lengths and diameters may be accommodated in Equations 1 and 2 above by using the sums $d_{1^2}L_1 + ... + d_{n^2}L_n$ and $d_1 + ... + d_n$ in place of d^2L and d, respectively.

301.03.10 Deflection Test for PVC Pipe

In addition to air testing, perform a deflection test for all sanitary sewers and culverts constructed of PVC pipe after the trench backfill and compaction has been completed. The test shall be conducted by pulling an approved solid pointed mandrel or variable deflection measuring gauge through the completed pipeline a minimum of 30 days after compaction is completed. The diameter of the mandrel shall be 95% of the internal pipe diameter. Conduct testing on a manhole-to-manhole basis and only after the line has been completely flushed clean with water.

Locate and repair any sections failing to pass the test and retest the section, at the Contractor's sole expense.

301.03.11 Television Inspection of Sanitary Sewers

Upon completion of all sewer construction, repairs, cleaning, and required tests, the Contractor shall notify the City Engineer 24 hours prior to when the television inspection will be performed.

Subsequent to being notified, the City Engineer shall commence examination of lines. Findings will be recorded.

When performing television inspections, water shall be added, tracing dye and a one-inch measuring ball shall be utilized.

Upon correction of deficiencies revealed by televiewing, the Contractor shall notify the City Engineer; the same steps listed above may be repeated until all work is acceptable.

The City of Milwaukie may, at its own option, perform a deflection test.

301.03.12 Subsequent Failure

No infiltration of ground water in the system is allowed. No standing water is allowed.

301.03.13 Cleanouts

Cleanouts will be constructed per the City standard details. The cleanout will stand vertical and the Contractor will bring compacted bedding material up around the vertical portion to the top.

301.03.14 Service Risers

The service risers will be constructed with a tee fitting at the main line. If a wye fitting is necessary then a ⅛ bend will be utilized at the wye in place of the tee. Payment will begin at the upper end of the ⅛ bend if the Contractor chooses to use this method.

301.03.15 Rail Lines Crossing Sanitary Sewer

New and reconstructed light rail and freight rail construction may require improvements to the sanitary sewer system at all utility crossing locations. Each utility crossing area is to be minimized. All existing clay pipes or pipes on the second half of useful life within the rail zones shall be replaced to current standards. Metallic or conductive pipe materials are not approved pipe materials at rail crossings. Pipes are to be centered under rail tracks to avoid joints underneath rail lines. All new pipe installations must identify practical future replacement options for the sewer pipe under rails in case of future failure of utility.

302 MANHOLES AND CONCRETE STRUCTURES

302.01 DESCRIPTION

This section covers the work necessary for the construction of the following items: (1) manholes, (2) drop assemblies, (3) special concrete structures, and (4) concrete encasement.

302.02 MATERIALS

302.02.01 Base Rock

¾-inch minus base rock, conforming to the requirements for crushed aggregate material in Subsection 204.02.05 (Class B Backfill, Crushed Aggregate [¾”-0 or as Specified]).

302.02.02 Forms

Forms for exposed surfaces shall be steel or plywood. Others shall be matched boards, plywood or other approved material. Form all vertical surfaces. Trench walls, large rock, or earth shall not be used as form material.

302.02.03 Concrete and Reinforced Steel

Concrete and reinforcing steel shall conform to Section 205 (Materials—Types and Use).

302.02.04 Cement Mortar

When specified for use, cement mortar shall conform to Section 205 (Materials—Types and Use). Consistency of mortar shall be such that it will readily adhere to the pipe if using the standard tongue-and-groove type joint. Mortar mixed for longer than 30 minutes shall not be used.

302.02.05 Manholes

A. Standard Precast Manhole Sections

Furnish sections as specified conforming to the details on the standard drawings and to ASTM C 478. Cones shall have same wall thickness and reinforcement as manhole section. Provide eccentric cones with precast grooves for all manholes over 6 feet in depth. Flat slab tops with precast grooves reinforced to withstand AASHTO H20 loading shall be provided for manholes 4 feet deep from crown of pipe and less. Top and bottom of all sections shall be parallel.

Prior to the delivery of any size of precast manhole section on the job site, yard permeability tests will be conducted at the point of manufacture. The precast sections to be tested will be selected at random from the stockpiled material that is to be supplied for the job. All test specimens will be mat tested, and shall meet the permeability test requirements of ASTM C 14 and ASTM C 497.

B. Precast Concrete Bases

Manholes may be constructed using precast, reinforced concrete bases. Construction of precast bases shall conform to the requirements of ASTM C478. **The base riser section shall be integral with the base slab**.

C. Poured in Place Manhole Bases

The Contractor may use poured in place manhole bases. Concrete shall conform to Section 302 (Manholes and Concrete Structures).

D. Manhole Grade Rings

Concrete grade rings for extensions shall be a maximum of 6 inches high.

E. Jointing Materials

Preformed plastic gaskets conforming to the requirements of AASHTO M-198 or joints using confined O-ring with rubber gaskets conforming to ASTM C443 shall be used.

302.02.06 Pipe and Fittings

Conform to requirements of Section 301 (Pipe and Fittings [Sanitary Sewer]).

302.02.07 Manhole and Cleanout Frames and Covers

A. General

All castings shall be true to size, weight and tolerances shown on the standard drawings. Delivered weight shall be +/- 5% of the specified weight. The bearing seat shall not rock

when checked by the test jig. The foundry shall supply all test gauges and shall not subcontract any of the work other than testing procedure, patterns, and machining and cartage. The casting shall not be made by the open mold method and shall be free of porosity, shrink cavities, cold shuts, or cracks, or any defects which would impair serviceability. Repair of defects by welding, or by the use of "smooth-on" or similar material will not be permitted. All castings shall be shot or sandblasted, and the application of paint or other coating will not be permitted. All manhole frames and covers located outside of the right-of-way shall be tamper-proof.

B. Materials

Conform to ASTM A 48, Class 30B with the following revisions:

Tensile Strength	30,000 PSI
Traverse Strength:	(1.2" diam. bar - 18" centers)
Load - Pounds	2,600 - 3,000
Deflection - Inches	0.22 - 0.34
Brinell Hardness (as cast)	173 - 200

The foundry shall certify as to the tensile and traverse properties and the Brinell Hardness. The City reserves the right to require a Rough Transverse bar (size of bar 1.2" diam. by 20" long) and/or a tensile bar as per ASTM A 48 for each 20 castings or heat when less than 20 castings are made.

C. Inspection

Notify the City at least 24 hours in advance of casting the units or bars. At least 24 hours notice shall also be given prior to final gauging and inspection. When directed, the following strength test shall be made on the manhole cover. The cover, while resting it its frame, shall sustain a concentrated load of 40,000 lbs. applied at its center through a 2½-inch plug. The City Engineer may, at any time, require up to 5% of the job and/or order and in no case less than 1 cover to be tested in this manner. In case of failure during the test, additional covers shall be furnished until the tests prove satisfactory. Covers that do not pass this test shall not be used.

D. Cap Screws

Cap screws and washers for tamperproof and watertight manhole covers shall be stainless steel with 60,000 PSI minimum tensile strength conforming to ASTM A 453.

302.02.08 Steps for Precast Manholes

Steps for precast manholes shall be of ¾-inch diameter structural steel in conformance with the standard details or be of steel reinforced polypropylene plastic, M.A. Industries, Inc., No PS-2PFS, or Lane No. P-13850, or approved equal. All steps shall be in conformance with ASTM C-478 and shall be aligned vertically. All steps within a manhole shall be of the same design, type and size (mixing of unmatched steps within the same manhole is not permitted). Loose steps shall be cause for rejection of that manhole cone or section.

Steps of ¾-inch diameter structural steel shall conform to ASTM A 36 and galvanized in accordance to ASTM A 123. Steps shall be safety type 12" x 8" x 2" pattern as shown on the standard plans.

Steel reinforced polypropylene steps are to be driven into pre-formed holes in precast concrete manhole cones and sections by the manhole manufacturer prior to delivery to job site and shall be in conformance with the following specifications:

ASTM A-615 Grade 60, ½" deformed steel rod
ASTM 2146-78 Type II, Polypropylene

302.02.09 Nonshrink Grout

Nonshrink grout shall be Sika 212, Euco N-S, Five-Star, or equal nonmetallic cementitious commercial grout exhibiting zero shrinkage per ASTM C-827 and CRD-C-621. Grout shall not be amended with cement or sand, and shall not be reconditioned with water after initial mixing. Unused grout shall be discarded after 20 minutes and shall not be used.

Nonshrink grouts shall be placed or packed only with the use of an approved commercial concrete bonding agent applied to all cured concrete surfaces being grouted. The bonding agent shall be compatible with the brand of grout being used. Water as a substitute for commercial bonding agent for nonshrink grout will not be allowed in sanitary sewer construction.

302.03 CONSTRUCTION

302.03.01 General

A. Excavation and Backfill

Conform to applicable provisions in Section 204 (Excavation, Embankment, Bedding, and Backfill). Backfill around manholes, inlets, catch basins, and other appurtenances shall be of the same quality as the trench backfill immediately adjacent. All excavation shall be unclassified.

B. Base Rock

Place crushed aggregate base rock and thoroughly compact with a mechanical vibrating or power tamper.

C. Foundation Stabilization

If material in bottom of excavation is unsuitable for supporting manholes and other sewer appurtenances, excavate below subgrade as directed and backfill to required grade with rock conforming to Foundation Stabilization in Section 204 (Excavation, Embankment, Bedding, and Backfill).

302.03.02 Manholes

All manholes, except as otherwise specified, shall be constructed using precast, reinforced concrete base sections, riser sections, and other precast appurtenances conforming to ASTM C478. Base riser sections shall be integral with the base slabs.

Preformed plastic gaskets shall be installed in strict accordance with the manufacturer's recommendation. Only pipe primer furnished by the gasket manufacturer will be approved. When using preformed plastic gaskets, manhole sections with chips or cracks in the joint surfaces shall not be used. Completed manholes shall be rigid and all manholes for sanitary sewers shall pass the vacuum test. Construct manhole inverts in conformance with the standard drawings with smooth transitions to ensure an unobstructed flow through manhole. Cover exposed edges of pipe completely with mortar. Trowel all mortar surfaces smooth.

The inside of all manholes will be grouted smooth with all spaces between risers, rings, and cones filled with grout flush with the inside of the manhole.

Holes for installing pipe into precast manhole sections shall be cast in place or core drilled.

Channels shall conform accurately to sewer grade. Channel shall be formed to accept a 3-foot-long by 6-inch T.V. camera. Construct cast in place channel and shelf, in field, in 1 operation. Finish concrete shelf between channels with a brush.

302.03.03 Drop Assemblies

Construct drop assemblies at locations indicated and as shown on the standard drawings.

302.03.04 Pipe Stubouts and Manholes

Install stubouts from manholes at locations as shown or directed. Concrete pipe connections to sanitary manholes shall be grouted watertight with nonshrink grout using an approved commercial concrete bonding agent applied to all concrete surfaces being grouted. Provide manhole with resilient connector for PVC pipe connectors. Saw cut opening in manhole walls with concrete saw. Pipe connections to the cone section of a manhole are strictly prohibited.

302.03.05 Manhole Grade Rings

In general, manhole grade rings will be used on all manholes in streets or roads or other locations where a subsequent change in existing grade may take place. Extensions will be limited to a maximum height of 12 inches.

Install appropriate combination of grade rings to a height that will accommodate the finish manhole surface elevation as shown on the drawings. Lay grade rings in mortar with sides plumb and tops level. All mortared sanitary sewer manhole necks and all grade ring joints made with mortar shall be constructed using an approved commercial concrete bonding agent applied to all cured concrete surfaces being mortared. No joints, necks, frames, or grade rings on sanitary sewers shall be mortared without an approved bonding agent. Water as a substitute for commercial concrete bonding agent will not be approved. Grade ring extensions shall be watertight. All mortared sanitary sewer manhole necks and all grade ring joints made with mortar shall be constructed using an approved commercial concrete bonding agent applied to all cured concrete surfaces being mortared. No joints, necks, frames, or grade rings on sanitary sewers shall be mortared without an approved bonding agent. Water as a substitute for commercial concrete bonding agent will not be approved.

302.03.06 Adjustment of Manholes and Cleanouts to Grade

The frame and cover will be adjusted to final grade after the first lift of AC has been placed and prior to the final lift. The void between the frame and the first lift of AC will be filled with Type B grout conforming to Section 205 (Materials—Types and Use).

302.03.07 Vacuum Testing

Manholes shall be vacuum tested.

1. Each manhole may be tested immediately after assembly and prior to backfilling for Contractor information and ease of repair if necessary. Acceptance testing will be accomplished after backfilling and final paving is complete.

2. All lift holes shall be plugged with an approved nonshrink grout. Manhole frame to grade ring or cone connection shall use commercial concrete bonding agent and nonshrink grout.

3. All pipes entering the manhole shall be plugged, taking care to securely brace the plug from being drawn into the manhole.

4. The test head shall be placed at the inside of the top of the manhole frame and the seal inflated in accordance with the manufacturer's recommendations. The seal at grade rings and frame shall be subject to the test.

5. A vacuum of 10 inches of mercury shall be drawn and the vacuum pump shut off. With valves closed, the time shall be measured for the vacuum to drop to 9 inches. The manhole shall pass if the time for the vacuum reading to drop from 10 inches of mercury to 9 inches of mercury meets or exceeds the values indicated below.

DEPTH OF MANHOLE (FEET)	ALLOWABLE TIME (SECONDS)		
	48-INCH	60-INCH	72-INCH
8	20	23	33
10	25	33	41
12	30	39	49
14	35	46	57
16	40	52	67
18	45	59	73
20	50	65	81
22	55	72	89
24	59	78	97
26	64	85	105
28	69	91	113
30	74	98	121

6. If the manhole fails the initial test, necessary repairs shall be made with an approved nonshrink, quick-setting grout. Retesting shall proceed until a satisfactory test is obtained.

302.03.08 Concrete Encasement for Sanitary Sewer

Conform to the requirements shown on the standard drawings and to applicable requirements of Section 204 (Excavation, Embankment, Bedding, and Backfill). Foundation stabilization, if required, shall be completed and the bottom of the trench compacted. Sides of encasement shall be formed, not poured against soil or rock, unless directed or approved by the City Engineer.

Support pipe true to line and grade before and during placement of concrete. Encasement shall be placed in a minimum of 2 lifts. Provide a keyway on both sides of the encased pipe and vertical reinforcing bond steel as shown on standard drawing. Adequately support the pipe to prevent pipe deflection during concrete placement and initial set.

Reinforcing shall be placed as shown on the appropriate standard detail.

After concrete encasement has been placed and taken an initial set, cure by covering with well-moistened earth or backfill material for 5 days before conducting compaction operations and air test.

302.03.09 Special Concrete Structures

Conform to the details as shown.

302.03.10 Placing Precast Units

If material in bottom of trench is unsuitable for supporting unit, excavate as directed and backfill to required grade with foundation stabilization material in conformance with Section 204 (Excavation, Embankment, Bedding, and Backfill). Set units to grade at locations shown or directed.

302.03.11 Cleaning

Upon completion, clean each structure of all silt, debris, and foreign matter.

303 WORK ON EXISTING SANITARY SEWERS

303.01 DESCRIPTION

This section covers the work necessary to join new work to existing, the abandoning of sanitary sewer lines, storm drains and structures, and adjusting existing utility structures to finished grades.

303.02 MATERIALS

Conform to requirements of Section 205 (Materials—Types And Use) and to the requirements for related work referred to herein.

303.02.01 Prefabricated Inside Drops (Oregon Drops)

This type of connection will only be allowed with prior approval by the City Engineer. Materials proposed to be used in construction shall be submitted to the City Engineer for approval.

303.03 CONSTRUCTION

303.03.01 Excavation and Backfill

Conform to requirements of Section 204 (Excavation, Embankment, Bedding, and Backfill). All excavation shall be unclassified.

303.03.02 Manholes Over Existing Sewers

Advise City Engineer of system for diverting sewage flow and obtain authorization before starting. The Contractor shall be totally responsible for maintaining adequate capacity for flow at all times and adequately protecting new and existing work.

Construct manholes over existing operating sewer lines at locations shown. Perform necessary excavation and construct new manholes in conformance with applicable requirements of Section 302 (Manholes and Concrete Structures).

Construct manholes as shown on the detail drawings or standard drawings. Densify the concrete base by vibrating or working as approved and screed to provide a level, uniform bearing for precast sections.

Manhole cannot be poured over existing pipe and then top of pipe removed to expose sanitary sewer. Pipe shall be cut outside of manhole with a flexible joint installed either side of manhole as shown in the appropriate standard drawing.

Place the first precast section of manhole in concrete base before concrete has set and deposit sufficient mortar on the base to assure a watertight seal between the base and the manhole wall. First section shall be properly located and plumb. Stacking additional precast manhole sections shall be prohibited until the concrete has cured a sufficient amount to support the additional weight in moist conditions.

Prevent broken material or debris from entering sewer flow. Maintain flow through approved sewer lines at all times. Protect new concrete and mortar for a period of 7 days after placing. All sanitary sewer manholes shall be vacuum tested in accordance with Subsection 302.03.07 (Vacuum Testing).

303.03.03 Connection to Existing Main

All tests shall be raised to the satisfaction of the City Engineer prior to connection to an existing sewer without prior inspection and approval of the pipe for watertightness and proper construction in accordance with the State plumbing code. Previous use of the service line or building sewer for septic tank or other application, or absence of usable cleanouts for accessing the building sewer, shall not excuse the requirement for testing except as may be authorized by the State Building Codes Inspector.

Connections of service lines to existing sewers shall be made watertight. Connection shall be made where possible to existing tees or wyes previously installed and plugged. The plug shall be removed and connection made in accordance with the applicable portions of Section 303 (Work on Existing Sanitary Sewers). Transition couplings between dissimilar pipe materials shall be made using approved commercial adapters with stainless steel bands such as Fernco, Caulder, or equal.

Where tees or wyes for connection are absent or unusable, connection of service lines shall be made with an approved tap such as Sealtite saddle, Fowler tap, Fowler tee, Tap-Tite tee, or equal commercial tap.

All taps shall be inspected and approved by an authorized representative of the local jurisdictional authority.

Taps shall be installed without protrusion into or damage to the existing sewer. No compromise of the sewer will be allowed, such as undermining and settlement of the sewer grade, debris in the sewer, or longitudinal or transverse cracking of the sewer pipe.

303.03.04 Removal of Existing Pipes, Manholes, and Appurtenances

Existing pipelines, manholes, and appurtenances which lie in the line of and are to be replaced by the new construction shall be removed from the site and disposed of as provided for in Section 203 (Clearing and Grubbing).

303.03.05 Filling Abandoned Manholes, Inlets, and Catch Basins

Existing manholes shown to be abandoned shall be filled with granular material as specified in Section 204 (Excavation, Embankment, Bedding, and Backfill). Compact to at least 90% maximum density as determined by ASTM D1557. Remove manhole frame and cover and plug all pipes with permanent plugs as specified in Section 303.03.07 (Permanent Plugs). Break or perforate the bottom to prevent the entrapment of water.

303.03.06 Existing Manhole Frames and Covers

Manhole frames and covers removed by the Contractor which will not be reused on the project shall become the property of the City. Notify the City Engineer a minimum of 1 day prior to removal to arrange for picking up the removed frames and covers.

303.03.07 Permanent Plugs

Clean interior contact surfaces of all pipes to be cut off or abandoned. Construct concrete plug in end of all pipe 18 inches or less in diameter. Minimum length of concrete plugs shall be 8 inches. For pipe 21 inches and larger, the plugs may be constructed of common brick or concrete block. Plaster the exposed face of block or brick plugs with mortar. All plugs shall be watertight and capable of withstanding all internal and external pressures without leakage.

303.03.08 Adjusting Existing Structures to Grade

Existing manholes, inlets, catch basins, and similar structures shall be brought to the specified finished grade by methods of construction, as required in Section 511 (Adjustment of Existing Structures to Grade).

303.03.09 Reconstruct Manhole Base

Conform to applicable requirements of Section 302 (Manholes and Concrete Structures). Exercise caution in chipping out existing concrete base so as to prevent cracking of manhole walls. Prevent all material from entering the sewer flow. Pour new base to a minimum of 6 inches below the lowest projection of the pipe. Construct new channels to the elevations shown. Conform to details for channel construction in the standard drawings. Repair any cracks which occur as a result of work operations with new grout to form a watertight seal.

303.03.10 Connect Pipe to Existing Inlets

Conform to applicable requirements of Section 302 (Manholes and Concrete Structures). Saw cut opening in inlet with a concrete saw and grout in a watertight seal between the new pipe and inlet wall. Plaster mortar smooth inside pipe opening. Alignment, slope of pipe, and other construction details shall be as specified.

303.03.11 Connection to Existing Manholes

All sanitary sewer pipe connections, including those at invert level and penetrations for drop connectors, conduits, and pass-throughs, shall conform to the requirements of applicable portions of Sections 301 (Pipe and Fittings [Sanitary Sewer]) and 302 (Manholes and Concrete Structures).

END OF DIVISION

DIVISION 4—WATER CONSTRUCTION STANDARDS

TABLE OF CONTENTS

401 GENERAL 1

402 WATER WORKS MATERIALS 1

402.01 DUCTILE-IRON FITTINGS 1
402.02 MECHANICAL JOINTS 1
402.02.01 Megalug Retainer Glands 1
402.03 FLANGED JOINTS 1
402.04 FLANGED PIPE OR SPOOLS 2
402.05 DUCTILE-IRON PIPE 2
402.06 POLYETHYLENE ENCASEMENT 2
402.07 VALVES (GENERAL) 2
402.08 GATE VALVES 2
402.09 BUTTERFLY VALVES 3
402.10 FIRE HYDRANT ASSEMBLY 3
402.11 CAST-IRON VALVE BOXES 3
402.12 BLOWOFF UNITS 3
402.13 AIR RELEASE VALVE UNITS 3
402.14 2-INCH SERVICE SADDLES 3
402.15 COPPER PIPE 3
402.16 BRASS FITTINGS 4
402.16.01 Corporation Stops 4
402.16.02 Meter Setters 4
402.16.03 VACANT 4
402.16.04 Copper Couplings 4
402.17 DIELECTRIC UNIONS 4
402.18 WATERLINE MATERIALS AT LIGHT RAIL CROSSINGS 4

403 CONSTRUCTION 4

403.01 STORAGE OF EQUIPMENT AND MATERIALS 4
403.02 PLACING AND BLOCKING PIPE AND FITTINGS 4
403.03 WET TAPPING EXISTING MAIN 5
403.04 POLYETHYLENE ENCASEMENT OF PIPE AND FITTINGS 6
403.05 PLACING VALVE UNITS 6
403.06 PLACING FIRE HYDRANT ASSEMBLIES 6
403.07 COPPER SERVICE INSTALLATION 6
403.08 PLACING PERMANENT BLOWOFF ASSEMBLIES 7
403.09 PLACING AIR RELEASE VALVE UNITS 8
403.10 REMOVING EXISTING WATER WORKS MATERIALS 8
403.11 ABANDONING EXISTING MAINS AND VALVES 8
403.12 MAINTAINING SERVICE 8
403.13 FLUSHING 8
403.14 TESTING AND CHLORINATION 9
403.15 CUT-IN AND CONNECTION TO EXISTING MAINS 10
403.16 CLAY DAMS 11

401 GENERAL

The following specifications, in conjunction with applicable requirements of other parts of the contract documents, the plans, and addenda, shall govern the character and quality of material, equipment and construction procedures for water work. All work done shall be in compliance with the requirements and restraints of OSHA, the State of Oregon Accident Prevention Division regulations and the Workers' Compensation Board. In addition, all work shall be completed in conformance with State of Oregon, Clackamas County, and/or City of Milwaukie street opening permits.

402 WATER WORKS MATERIALS

402.01 DUCTILE-IRON FITTINGS

All fittings shall conform to ANSI/AWWA Specification C110/A21.10 or ANSI/AWWA Specification C153/A21.53. All ductile-iron fittings shall be Class 350. Fittings shall be furnished with flanged or mechanical joints as specified on the plans. Fittings shall be ductile-iron fittings conforming to AWWA C110 and for compact C153. Fusion bonded epoxy fittings shall be U.S. pipe Permafuse or equal. Fittings shall be factory lined with cement mortar or cement lined to factory standards. No field coating with cement will be approved, other than for minor repairs. Fittings shall be new and free of defects in coating, body, and lining. During installation, fittings shall be properly aligned and bolted securely to provide watertight joints. All buried units and bolts shall receive a protective coating of Koppers Super Tank or approved equal. Protective coating shall be dried and cured before fitting is placed and covered. If coating is not dry, 2 layers of 8-mil plastic shall be wrapped around fitting and coated areas.

Fittings must be manufactured to conform to ANSI/AWWA standards.

402.02 MECHANICAL JOINTS

Mechanical joints, including accessory glands, gaskets, and bolts, shall conform to the requirements of ANSI/AWWA C111/A21.11, except where specifically modified in AWWA C153 for compact ductile-iron fittings. As stated in AWWA C111, T-bolts shall be made of <u>either</u> high-strength cast iron containing a minimum of 0.50% copper, or high-strength, low alloy, steel. Bolts shall be marked to identify material and producer. Contractor shall provide the City with the bolt manufacturer's specifications, which shall give the following information: manufacturer's name, type of material, and identifying mark. Follower glands for mechanical joints shall be domestic made only.

Mechanical joint gaskets shall be made of vulcanized synthetic rubber and shall be no more than 3 years old.

The recommended installation procedures in AWWA specification C111, Appendix A, "Notes on Installation of Mechanical Joints," including bolt torque ranges, shall be followed.

402.02.01 Megalug Retainer Glands

Retainer glands on mechanical joints are allowed only where approved by the City Engineer on a case-by-case basis. Retainer glands shall be Megalug brand, as manufactured by Ebaa Iron Sales, Inc., ONLY. Megalug shall be used on ductile-iron pipe and fittings.

402.03 FLANGED JOINTS

Flanges shall conform to ANSI specification B16.1 for Class 125 flanges and shall conform in all other respects to ANSI/AWWA C110/A21.11. Bolts for assembly of flanged joints shall be of the size and quantity shown in Table 10.14 on Page 34 of AWWA C110. As stated in AWWA C110, bolts shall conform to ANSI B18.2.1, Square and Hex Bolts and Screws Inch Series, Including Hex Cap Screws and Lag Screws. Nuts shall conform to ANSI B18.2.2, Square and Hex Nuts. Threads shall conform to ANSI B1.1, Standard for Unified Inch Screw Threads (UN and UNR Thread Form), Class 2A, external, and Class 2B, internal.

Bolts and nuts shall be of low-carbon steel conforming to the requirements of ASTM A307, Standard Specifications for Carbon Steel Bolts and Studs, 60,000 PSI Tensile Strength, Grade B.

Contractor shall provide the City with the manufacturer's specifications regarding the bolts to be used on the project.

Flange gaskets shall be full face, ⅛" thick, red rubber or approved equal.

402.04 FLANGED PIPE OR SPOOLS

Flanged pipe or spools shall conform to the latest edition of ANSI/ANWA C115/A21.15. Flanges shall conform to requirements as specified in Subsection 402.04 (Flanged Joints). Pipe used shall be Class 53 DI. Pipe shall be furnished with coatings as specified in "Ductile-Iron Pipe". Threads on the flanges and pipe barrel shall be taper pipe threads (NPT) in accordance with ANSI B1.20.1.

When ordering, the following minimum information shall be provided to the manufacturer: Pipe size and finished length (flg. to flg., flg. to p.e.).

Manufacturer shall provide the following information: Length and weight shown on each pipe, flange manufacturer marking, country where cast, and DI or CI stamped on flanges. If fabricator is other than flange manufacturer, fabricator's mark shall be stamped with metal die on each flange after assembly. Also, manufacturer shall provide statement that the flange pipe complies with the specified standards.

402.05 DUCTILE-IRON PIPE

Ductile-iron pipe shall be Class 52. Physical properties shall not be less than 60-42-10 iron and pipe shall conform to the latest revision of ANSI/AWWA specification C151/A21.51. Ductile-iron pipe shall be factory lined with cement mortar and bituminous seal coat and coated outside with asphaltic seal coat. Push-on rubber gasketed joints shall be provided unless mechanical, flanged, or locked joints are specified on the plans. Push-on and mechanical pipe joints shall conform to ANSI/AWWA Specification C111/A21.11 and flanged joints shall conform to ANSI/AWWA C115/A21.15.

402.06 POLYETHYLENE ENCASEMENT

Polyethylene film shall conform to ASTM standard specification D-1248-78, having a minimum thickness of 0.008" (8 mil). Only polyethylene tubing, and not sheets, shall be installed.

Polyethylene tubing shall be held in place with 2-inch-wide adhesive tape which is compatible with polyethylene, with plastic binder twine, with nylon tie straps, or other method approved by the City Engineer.

402.07 VALVES (GENERAL)

All valves shall be designed to AWWA specifications and shall have standard 2-inch-square operating nut unless otherwise shown on the plans. All pipe valves and fittings shall be pressure rated at 250 to 350 PSI and shall open counter clockwise. All fittings shall be factory cement lined and coated.

402.08 GATE VALVES

2 inch gate valves shall be resilient wedge double disc, nonrising stem with "O" ring packing, complying with AWWA Class C specifications. Gate valves 4" through 10" shall be resilient wedge, nonrising stem with "O" ring packing, complying with AWWA Class C specifications. The valves shall be designed to withstand water working pressures of 150 PSI or more. All valves shall be furnished with a 2 inch-square operating nut and shall open counter clockwise when viewing valve from above.

Operation of the valve shall permit full withdrawal of the disc from the waterway to provide a clear unrestricted passage when the valve is in the open position. The valve shall be furnished with mechanical joint ends unless otherwise specified. Where flanges are furnished on valves, they shall conform to ANSI Specification B-16.1, Class 125.

Valves located within vaults must have both hand wheel and rising stems.

402.09 BUTTERFLY VALVES

All butterfly valves shall be rubber-seat type and bubble-tight at 150 PSI pressure with flow in either direction. They shall be designed for direct burial and be satisfactory for application involving valve operation after long periods of inactivity. Valves shall conform to AWWA specification C-504. All valves shall be Mueller or approved equal. Operating nut for the valve shall be located on the side of the main shown on the plans.

402.10 FIRE HYDRANT ASSEMBLY

Fire hydrants shall conform to AWWA specification C-502. The hydrants shall have a 5¼-inch minimum valve opening with a 6-inch mechanical joint inlet, a 6-inch mechanical joint by flanged resilient wedge auxiliary gate valve, two 2½-inch hose nozzles, one 4½" pumper nozzle, a 1½-inch pentagon operating nut (opening counter clockwise), and a safety flange. The hydrant color shall be yellow (Miller Safety Yellow OE 40). The fire hydrant depth of bury shall be arranged to match the grade of the surrounding ground. See standard drawing no. 400 for additional requirements.

Fire hydrants shall be Waterous WB67, Mueller Centurion A-423, M&H 929 Reliant, or Clow Medallion F-2545. No other manufacturer will be accepted by the City.

402.11 CAST-IRON VALVE BOXES

Valve boxes shall be manufactured using domestic cast iron only. Valve boxes shall be the cast iron "Vancouver" pattern (18" tall casting only) with “City of Milwaukie” standard lid. Valve riser pipe from the valve to the cast-iron top shall be 8-inch PVC sewer pipe ASTM D3034, SDR35, or approved equal for the Vancouver box. A self-centering valve cover shall be compatible with 8-inch valve riser pipe, VC212 or approved equal. See standard drawing no. 409.

Valve box castings shall be smooth and uniform. Box lid shall not protrude above the rim and lids shall seat flat without rocking. Boxes of uneven thickness, pitted, or otherwise flawed in the casting will be rejected. PVC sewer pipe shall be cut off smooth with no sharp edges.

402.12 BLOWOFF UNITS

Blowoff units shall consist of a Truflow model TF500 2” flushing hydrant or approved equal. See standard drawing no. 403 for additional requirements.

402.13 AIR RELEASE VALVE UNITS

Air release valve unit shall consist of a 1-inch Ford FB1000-4-Q corporation stop, 1-inch Type K soft copper tubing, 1-inch Ford B44-444-Q ball valve, 1-inch Val-matic no. 38 air release valve, hand valve box, 2-stacked Mid States Plastics MSBCF1730-12 meter boxes with 1-lid MSCBC 1730-R, and brass ells, nipples and adapters. All air release valve appurtenances shall consist of the specified parts or approved equal. See standard drawing no. 404.

402.14 2-INCH SERVICE SADDLES

Generally, 2” water services shall be connected with a 2” Ford F1000-7-Q Corporation Stop or approved equal at the main. Service saddles may be approved by the City Engineer. Where approved, service saddles shall be 2" IPT, double strap, stainless steel. Body of saddle shall be ductile iron coated with nylon, and straps, bolts, washers, and nuts shall be stainless steel.

402.15 COPPER PIPE

Service lines shall be soft temper, copper water tube Type K, meeting ASTM B-88 specifications.

402.16 BRASS FITTINGS

402.16.01 Corporation Stops

Corporation stops shall be Ford F1000-x-Q or approved equal. See standard drawings no. 401-402.

402.16.02 Meter Setters

All meters must have meter setters installed within the meter box area. For 1” water services, Ford VH74-12W-44-44. For a ⅝” or ¾” meter an A24 adapter must be used. For 1.5” meters a Ford VH76-12B-11-66 shall be used to set the meter, while a Ford VH77-12B-11-77 shall be used for a 2” meter. See standard drawings no. 401 and 402.

402.16.03 VACANT

402.16.04 Copper Couplings

Straight couplings, copper to inside iron pipe thread shall be Ford compression or equal. Copper couplings, copper to outside iron pipe threads, shall be Ford compression union or equal.

402.17 DIELECTRIC UNIONS

A dielectric union shall be installed between the meter setter and any metal water service piping on the customer side of the water meter. The dielectric union shall be Watts Series 3003 or approved equal. See standard drawings no. 401 and 402.

402.18 WATERLINE MATERIALS AT LIGHT RAIL CROSSINGS

New and reconstructed light rail and freight rail construction may require improvements to the water system at all utility crossing locations. Each utility crossing area is to be minimized. All existing water pipes or pipes within the rail zones shall be replaced to current standards and encased. Metallic or conductive pipe materials are not approved pipe materials at rail crossings. Pipes are to be centered under rail tracks to avoid joints underneath rail lines. All accessible structures must be located a minimum of 15' from the gate arms outside of the rail crossings.

403 CONSTRUCTION

403.01 STORAGE OF EQUIPMENT AND MATERIALS

Unless otherwise noted on the plans or in the special provisions, it shall be the responsibility of the Contractor to locate a storage site for all equipment and materials and gain approval from the City Engineer.

Prior approval shall be obtained from the governing agency for any storage of equipment or materials within the right of way (i.e., stringing of pipe).

403.02 PLACING AND BLOCKING PIPE AND FITTINGS

The pipe shall be laid true to line, without objectionable breaks in grade and shall be firmly bedded for the entire length of the pipe.

Where conflicts arise between the designed grade of the waterline and an existing underground structure, the depth of the trench may be increased to permit proper installation of the waterline. Payment for over excavation shall begin once the extra depth reaches 18" below the designed grade.

Care shall be taken to clean joints and to keep them free of water during construction. Whenever water is excluded from the interior of the pipe, adequate backfill shall be deposited on the pipe to prevent floating. In the event of any flotation occurring, the pipe so affected shall be removed from the trench, replaced and re-laid at the Contractor's expense.

Each section of the pipe and each fitting shall be thoroughly cleaned before it is lowered into the trench. Cleaning of each pipe or fitting shall be accomplished by swabbing out, brushing out, blowing out with compressed air, washing to remove all foreign matter. The most efficient method of cleaning out pipe and fittings will be determined on the job by the City Engineer.

If clean pipe sections and fittings cannot be placed in the trench without getting dirt into the open ends, the City Engineer will require that a piece of tightly woven canvas be tied over the ends of the pipe or fitting until it has been lowered into position in the trench. After the pipe or fitting has been lowered into the trench, all foreign matter shall be completely brushed from the bell and spigot ends before assembly. At the end of each day, or during suspension of the work, the pipe ends shall be securely closed by means of a secure plug or approved equivalent. Water in the trench shall not be allowed to enter the pipe and fittings.

All tees, elbows and any major changes in direction of pipe alignment shall be securely blocked using appropriate size thrust block based on the size and pressure of the water main to be constructed, or approved be an equivalent. All pipe and fittings in contact with concrete shall be completely wrapped in 2 layers of 4 mil plastic prior to the placement of the concrete as approved by the City Engineer. Concrete used for thrust blocking shall have a slump of 2 to 4 inches and a minimum 28-day strength of 3000 PSI. Concrete mix shall be uniformly blended with appropriate quantity of water before being placed in the trench and shall not contain any dirt or other foreign matter. Thrust blocks shall be formed so that fitting joints remain accessible, and blocks that are to be removed in future waterline extensions shall be supplied with a rebar pulling loop and formed so that the block may be pulled off without disturbing the fitting (See standard detail drawings no. 405 and 406). The cost of furnishing and installing blocking, rebar pull loops and plastic wrap shall be included in the unit prices bid.

If it is necessary to cut the pipe to lay it on curves or to cause a change in direction, the Contractor shall cut the pipe as required for proper installation. Where the cut length of pipe is to be installed into the bell end of another pipe, the cut end shall be beveled to ensure a proper seal. To set valves and fittings properly, the pipe shall be cut to the exact length required to obtain the designated locations. The cost of cutting the pipe shall be included in the unit prices bid.

Dead end lines, where a standard 2- or 4-inch blowoff assembly is not required by the plans, shall be provided with a ¾-inch corporation stop 18 inches from the plugged end of the pipe. This will allow for air removal and release of line pressure during future waterline extension. No extra payment shall be made for this installation.

403.03 WET TAPPING EXISTING MAIN

When specified, wet taps on existing water main are required to minimize interruption of service to customers. Typically, wet taps will only be performed under the direction of City personnel. Tapping sleeve and valve shall conform to standard drawing no. 408.

Before attaching tapping sleeve, care shall be taken to clean water main of all debris and defects. Attach sleeve and valve to the main. Then attach proper tapping machine to valve. Pressure test this assembly before making tap. After making tap, remove the tapping machine and inspect fitting and valve for leaks. If any such leaks are found, Contractor shall be required to repair the defect. Attach branch main to valve and install pipe. Tapping sleeve and valve shall be wrapped in 8 mil plastic and tape in accordance with Subsection 403.04 (Polyethylene Encasement of Pipe and Fittings). Taps shall be made no closer than 18" from end of sleeve to nearest joint.

Excavation for tap shall be such as to fully expose main with a minimum depth below main of 12 inches. A minimum of 18" of main shall be exposed from the end of the tapping sleeve. Also, excavate enough area to accommodate tapping machine and workers. Backfilling shall be in accordance with Section 204 (Excavation, Embankment, Bedding, and Backfill).

403.04 POLYETHYLENE ENCASEMENT OF PIPE AND FITTINGS

When specified, install polyethylene encasement, tube type, on all pipe and appurtenances. Polyethylene film shall conform to ASTM standard specification D-1248-78, having a minimum thickness of 0.008" (8 mil). Install this encasement in accordance with AWWA C105, Method A, 1 length of polyethylene tube for each length of pipe. The use of polyethylene sheets will not be allowed. Sand backfill shall be placed within the pipe zone and bedding area wherever polyethylene encasement is used.

Cut tubing open if necessary to wrap valves and fittings. Valves shall be wrapped up to the bottom of the operating nut. Polyethylene shall be wrapped snugly around the pipe and held in place by using an adhesive tape compatible with polyethylene, plastic binder twine, or nylon tie straps. Backfill material shall not be allowed to get under the polyethylene, and pockets in the polyethylene which can trap backfill material shall be eliminated.

403.05 PLACING VALVE UNITS

A valve unit shall consist of a valve, bolts, gaskets, followers, self-centering valve cover, PVC riser pipe, and cast-iron valve box, complete with cover.

Valves shall be placed in a vertical position at locations shown on the plans. The Contractor shall check each valve to determine that the valve is properly adjusted to seat securely and open fully. Valves not meeting these requirements shall not be installed. Self-centering valve covers, valve boxes, and PVC riser pipe shall be placed in a vertical position over the valve operating nut and the backfill shall be carefully compacted around the box. Any valve boxes found off center from the valve operating nut shall be removed and replaced into the proper position. The top of the valve box shall be adjusted to meet finish grade. PVC riser pipe shall extend up outside the valve box 7 inches on the Vancouver box to allow future raising of the box. Notches shall be cut into the rim of the valve box on a line passing through the center of the box as detailed on standard drawing no. 409. Valve boxes shall be placed so that the notches line up parallel with the water main below. A collar of concrete with a depth of 4", 24” x 24” square, shall be placed around the top of all valve boxes not in a paved area.

The Contractor shall not operate any valve touching potable water.

403.06 PLACING FIRE HYDRANT ASSEMBLIES

The fire hydrant assembly shall consist of a mechanical joint hydrant, mechanical joint by flange auxiliary gate valve, cast-iron valve box, galvanized bolts, gaskets and tie rods.

The fire hydrant shall be placed in a vertical position on a precast concrete slab having a bearing surface of not less than 1 square foot. The hydrant shall be securely blocked using not less than 3 cubic feet of concrete. Hydrant drain holes shall not be blocked. Not less than 4 cubic feet of clean drain rock shall be placed and wrapped in plastic around the base of the hydrant for drainage. See standard drawing no. 400 for other requirements. Fire hydrant extension kits may be installed with approval by the City Engineer. Where approved, fire hydrant extension kits may only be installed by City water crews. In no instance will more than one fire hydrant extension kit per hydrant be installed.

403.07 COPPER SERVICE INSTALLATION

Where indicated on the drawings or as determined in the field, the Contractor will be required to install copper water services. This will require the Contractor to make all taps for the service; install new copper pipe or transfer existing copper pipe to new main and install corporation stops, meter setters, and meter box; and make connection to customer service pipe. See standard drawings no. 401 and 402 for installation requirements.

Where new 1-inch angle meter stops shall be installed set at the same elevation as the existing angle meter stop with a maximum of 2 inches away from connection point on the existing meter. All new copper pipe and service fittings shall be kept clean and free of debris. Contractor will make connection of new

angle meter stop or meter setter to existing meter. Contractor shall only have to remove the existing angle meter stop, connect the new angle meter stop, and flush the new service. A dielectric union shall be installed between the meter setter and any metal service pipe on the customer side of the water meter.

Where new services are installed, new meter boxes shall be set with the top of the box at finish grade. Meter boxes shall be: (1) located behind the sidewalk where there is sufficient right-of-way; (2) within the planter strip, excluding water quality facilities; and (3) within the sidewalk with the back of the meter box at the back edge of the sidewalk. The longest dimension of the box shall be set perpendicular to the centerline of the street. A new meter box shall be provided where, in the opinion of the City Engineer, an existing meter box is cracked, broken, or has missing parts. Where an existing meter must be relocated, Contractor shall provide and install the new copper service, angle meter stop, and meter box complete and adjusted, to finished grade.

All copper service pipe shall be bedded and covered with ¾" minus crushed aggregate to a depth of 6 inches on all sides.

Service lines shall be located in a direct line between the meter and a point on the main directly opposite the meter. Service lines shall have a minimum cover of 30 inches except where crossing road ditches where the cover may be reduced to 24 inches at said road ditch.

Where existing copper service is to be transferred to new main, and the existing main is to remain live, Contractor shall disconnect corporation stop from old main and install a brass plug. Contractor shall provide excavation down to old corporation stop, select backfill and compaction. Excavation and backfill shall be considered incidental to the project. Contractor shall perform surface restoration according to the bid item for that work.

All new services crossing existing metal gas lines shall have PVC sleeves as discussed on standard drawings no. 401 and 402.

Corporation stops shall be set at a 30 degree angle up from horizontal. Taps shall be a minimum distance of 18 inches from the bell or spigot end of the main or another service tap.

Where a new section of copper service is to be installed, it shall be Type K, seamless soft annealed copper pipe conforming to ASTM B-88. There shall be no splicing of copper unless service is longer than 60 feet or as approved by the City Engineer (unique conditions). When splicing is approved between 2 pieces of copper, it shall be done with a 3 piece copper to copper union. No more than 1 splice per service shall be made and splicing shall be made outside of the existing or proposed travel lane. Existing galvanized service lines encountered by the Contractor shall be replaced with copper service pipe up to and through the angle meter stop.

Where 1½"-2" services are to be installed, the new main shall be tapped with 1½”-2” corporation stop. 1½”-2" copper tubing and 1½"-2" meter setter shall then be installed to the new meter location. See standard drawing no. 402.

Once the new copper services are installed by the Contractor and the new waterline facilities are pressure tested, chlorinated and accepted, Contractor shall relocate existing meters to their new locations and replumb the service. It shall be the responsibility of the Contractor to coordinate this with the City Construction Inspector. Placement of new sidewalks or other surface restoration shall not take place until meters have been installed.

403.08 PLACING PERMANENT BLOWOFF ASSEMBLIES

A standard 2" blowoff assembly shall consist of a plug tapped 2" IPT, 2" brass nipple, 2" brass elbow, a Truflow model TF500, and a pier block. For dead-end water mains greater than 400 feet in length, a 2” Ford FB1000-7-Q corporation stop or approved equal shall be attached to the tapped plug.

A 4" or 6" blowoff assembly shall consist of a main size x 4" or 6" MJ x flange reducer, flange x flange resilient wedge gate valve, companion flange, galvanized 90º bend, schedule 40 galvanized piping, pier block, 2 valve boxes, galvanized coupling and galvanized bar plug.

The blowoff assembly shall be placed as shown in standard drawing no. 403, securely blocked with concrete as required.

The main line pipe shall be thrust restrained with a straddle block as shown on standard drawing no. 406 or concrete thrust block as shown on standard drawing no. 405. Blowoff pipe and fittings shall remain fully accessible for repair and replacement without disturbing thrust blocking.

Payment for the blowoff assembly shall include furnishing, transporting, assembling and placing of the complete assembly, blocking, plus backfill and servicing. Main line thrust blocking shall be paid under separate bid item.

403.09 PLACING AIR RELEASE VALVE UNITS

An air release valve unit shall consist of a 1-inch Ford FB1000-4-Q corporation stop, 1-inch Type K soft copper tubing, 1-inch Ford B44-444-Q ball valve, 1-inch Val-matic no. 38 air release valve, hand valve box, 2-stacked Mid States Plastics MSBCF1730-12 meter boxes with 1-lid MSCBC 1730-R, and other fittings for plumbing the unit and as noted on standard drawing no. 404.

The air release valve unit shall be placed as shown on the plans, secure in place with concrete block and all crushed gravels compacted as specified.

Placing the air release valve unit shall consist of transporting, assembling, and placing of the complete unit, tapping the water main, excavating and backfilling as specified and servicing. Corporation stops shall be set at a 90 degree angle up from horizontal, tapped on the top of the water main. Taps shall be a minimum distance of 18 inches from the bell or spigot end of the main or another service tap.

403.10 REMOVING EXISTING WATER WORKS MATERIALS

When the Contractor removes existing pipe, gate valve units, fittings, fire hydrant units or other items to allow installation of the work specified herein, the Contractor shall haul the removed water works material away. Title to the removed materials shall transfer to the Contractor, except when otherwise specified.

The City reserves the right to designate other water works materials to be removed. The Contractor shall remove the designated water works materials and haul them to the City's designated storage yard.

403.11 ABANDONING EXISTING MAINS AND VALVES

Any existing water lines that are abandoned shall be severed and plugged as directed by the City Engineer. All abandoned valve boxes shall be removed, gravel filled, compacted, and asphalt plugged at no additional cost.

403.12 MAINTAINING SERVICE

The Contractor shall schedule construction work specified herein to maintain a continuous water service to existing water users. Where it is necessary to shut down service to make required interties, the Contractor shall notify the City at least five working days prior to a planned water service shut down to allow the City to notify users of the impending loss of water service. Contractor may be required to make necessary service shutdowns of affected businesses after regular business hours at no additional cost to the City.

403.13 FLUSHING

The new pipeline shall be flushed, pressure tested, and disinfected before any connection to the existing water system is made. Temporary blowoffs and chlorination points shall be provided by Contractor at all dead-ends and points of connection to the existing system. The new waterline shall be built as close as possible, as determined by the City Engineer, to the existing water system at points where connections are to be made.

All pipe, valves and fittings shall be thoroughly flushed prior to pressure testing and chlorination. Flushing shall be done through blowoff units, hydrants, individual services, and main at a minimum velocity of 2.5

F/S. All water used during flushing operations shall be measured through a Pitot Blade and stop watch. All results shall be reported to the City Engineer on a daily basis.

Prior to any flushing procedures taking place, the Contractor shall issue a flushing plan providing direction of flow, water damage control and a written schedule to the City Engineer for approval. A 48-hour notice shall be given to the City Engineer prior to any system shut-down or flushing procedures. Under no circumstance shall the Contractor operate any City valves without prior approval by the City Engineer.

The following chart shows minimum temporary blowoff/inlet sizes which shall be provided by the Contractor. Gate valves shall be provided on blowoff and inlet pipes to pressure test against, and to keep the pipe interior clean when backflow device is removed.

REQUIRED OPENINGS TO FLUSH PIPELINES		
NOMINAL PIPE SIZE (INCHES)	FLOW REQUIRED TO PRODUCE 2.5 FPS VELOCITY(GPM)	MINIMUM INLET & OUTLET PIPE SIZE REQUIRED (INCHES)
4	110	2
6	240	2
8	430	4
10	660	4
12	950	4
14	1290	6
16	1690	6
18	2140	6
20	2640	6
24	3800	6

All flushing and testing water shall be delivered to the new waterline through Oregon State Health Division approved double check valve backflow prevention devices.

The Contractor shall provide or obtain a backflow prevention device. Certified backflow tester shall test device and furnish documentation to City Construction Inspector after device is installed on site.

After flushing, the new system shall be pressure tested and disinfected. Payment for this item shall be included in the price bid for pipeline installation work.

403.14 TESTING AND CHLORINATION

All of the pipe, fittings, services, and individual valves, except the last connection with the existing main, after being placed, must be pressure tested, conforming to AWWA C600 Section 4 specifications. If the Contractor elects to test the line in sections, the lengths of the sections and provisions for testing shall be subject to approval by the City Engineer.

Before testing the pipeline for leakage, the pipeline shall be thrust blocked. The interior of the pipeline shall be thoroughly cleaned to remove all foreign matter.

The Contractor shall furnish necessary thrust blocks, pumps, medium range pressure gauges, means of measuring water loss, and all other equipment, materials and labor required for making the tests.

All air vents shall be open during the filling of the pipeline with water. After a test section is completely filled, it shall be allowed to stand under slight pressure for at least 24 hours to allow the lining to absorb what water it will and to allow the escape of air from any small air pockets. During this period, the bulkheads, valves and exposed connections shall be examined for leaks. If any are found, they shall be stopped. The pressure shall then be raised slowly to the minimum hydrostatic pressure of 180 pounds per square inch, or 1.5 times the normal working pressure, whichever is higher, measured at the point of

highest elevation and shall be maintained for a period of at least 1 hour, beginning at a time of day to be mutually agreed upon between the Contractor and the City Engineer.

Test pressure shall not exceed 150% of pipe pressure rating.

No leakage is acceptable. While the pipe is under pressure and stabilized, an inspection for leaks along the pipeline shall be made by the Contractor. The gauges should be graduated at 2 PSI increments. Any leaks found shall be recorded and shall be repaired by the Contractor. All such repairs shall be made subject to the approval of the City Engineer.

The Contractor, at their own expense, shall perform any excavation required to locate and repair leaks or other defects which may develop under the test. He shall remove backfill and paving already placed, shall replace such removed material, and shall make all repairs necessary to secure the required water-tightness. All repairs and re-tests shall be made at the Contractor's sole expense.

All leakage tests shall be made in the presence of the City Engineer or City Inspector.

The pipeline shall be thoroughly chlorinated and flushed in accordance with the Oregon State Health Division's publication, "Public Water Systems", ORS Chapter 333. All chlorinated water shall be discharged into the public sanitary sewer system. If a sanitary sewer is not available, the Contractor shall employ the use of storage tanks, basins, or other means to transport or treat the chlorinated water for discharge to an approved point of disposal. Adequate quantities of chlorine in a water solution shall be added to the pipeline and shall be allowed to stand a sufficient length of time to sterilize the interior of the pipeline. The chlorinated water shall be flushed from the pipeline and a water sample shall be taken from the pipeline. The water sample shall be tested biologically and an acceptable certification that the water is safe for domestic water consumption shall be obtained before placing the pipeline into service. If the water is not safe, the Contractor shall chlorinate and flush the line and take new samples until an acceptable safe water certification is obtained.

Chlorine may be applied by the following methods: Liquid chlorine gas/water mixture, direct chlorine gas feed, or calcium hypochlorite and water mixture. The chlorination agent shall be applied at the beginning of the section adjacent to the feeder connection and shall be injected through a corporation cock, hydrant, or other connection ensuring treatment of the entire line. Water shall be fed slowly into new line with chlorine applied in amounts to produce a dosage greater than 50 ppm but not more than 200 ppm throughout the system. After 24 hours, a residual of not less than 25 ppm shall be produced in all parts of the line. If the check measurement taken after the 24-hour period indicates a free chlorine residual of less than 25 ppm, the system shall be flushed, rechlorinated, and rechecked until a final residual of 25 ppm or more is achieved and at no additional expense to the City.

During the chlorination process, all valves and accessories shall be operated. All parts of the line and services shall be chlorinated. After chlorination, the water shall be flushed from the line at its extremities until the replacement water tests are equal chemically and bacteriologically to those of the permanent source of supply. Care shall be taken to prevent discharge of chlorinated water directly to running streams. The water should be spread over the ground or held in ditches or seepage ponds. Water samples will be taken for bacteriological tests by the City of Milwaukie.

The Contractor shall furnish and place all necessary fittings required for the testing, chlorinating and flushing of the pipeline. If a corporation stop is removed, the hole shall be filled with a brass plug.

Water used in testing and flushing the pipeline shall be purchased from the City.

403.15 CUT-IN AND CONNECTION TO EXISTING MAINS

After new waterline is flushed, pressure tested and disinfected, but prior to any cut-in and connects, Contractor shall hold an on-site pre-connection meeting. Those to attend shall include on-site foreman, City Inspector, City Operations Personnel, and City Engineer.

This meeting shall take place prior to each connection and no longer than 1 week prior to the connection. At this meeting, Contractor shall have all fittings, pipe, chlorine swabbing equipment, pumps and hoses,

and all equipment needed to make the cut-in connect. Cut-in schedule and shutdown coordination shall be discussed.

Once the bacteria test has been passed, cut-ins and connections to the existing water system shall be made by the Contractor. All fittings necessary for the cut-in and pumps adequate to handle water in the trench shall be on hand and ready for service before connection is commenced. If the new waterline is opened to the air before Contractor and City personnel are ready to proceed with the connection, or if new waterline is contaminated by dirt or dirty water, the new waterline shall be disinfected again.

Fittings and pipe for cut-ins shall be swabbed out thoroughly with a 1% chlorine solution (½ pound of 64% calcium hypochlorite in 4 gallons of water). Swabbing equipment and solution shall be kept clean and fresh.

During each connection, work shall proceed without breaks until the connection is completed and water service is turned back on. Ground water shall not be allowed around any of the existing piping during the connection.

After the connection is completed and water service is turned back on, a visual leak inspection of all fittings shall be done by the Inspector prior to backfilling.

403.16 CLAY DAMS

Where indicated on the plans, or as directed by the City Engineer, the Contractor shall place clay dams to prevent ground water movement along the trench. Dams shall be made of impervious backfill material composed of particles at least 50% of which pass a no. 200 sieve, and with a plasticity index not less than 20, unless otherwise indicated on the plans.

A dam shall fill the trench completely from side to side and top to bottom, except for the volume occupied by the pipeline and any materials required for surface restoration. Pipe in contact with clay dam will be wrapped with 2 layers of 8-mil polyethylene.

Flow shall be considered in design of water and storm drain system.

END OF DIVISION

DIVISION 5—STREET CONSTRUCTION STANDARDS

TABLE OF CONTENTS

501 SUBGRADE 1
501.01 DESCRIPTION 1
501.01.01 Untreated Subgrade 1
501.02 MATERIALS 1
501.02.01 Water 1
501.03 CONSTRUCTION 1
501.03.01 Preparation 1
501.03.02 Grading of Areas Not to be Paved 2
501.03.03 Overexcavation and Foundation Stabilization 2
501.03.04 Embankment Construction 2
501.03.05 Slides and Slipouts 2
501.03.06 Slopes 2
501.03.07 Finishing and Cleanup 2
501.03.08 Compaction and Density Requirements 2

502 WATERING 3
502.01 DESCRIPTION 3
502.02 MATERIALS 3
502.02.01 Water 3
502.03 CONSTRUCTION 3

503 AGGREGATE BASES 3
503.01 DESCRIPTION 3
503.02 MATERIALS 3
503.02.01 Aggregate 3
503.02.02 Sand Equivalent 3
503.02.03 Liquid Limit and Plasticity 4
503.02.04 Grading Requirements 4
503.02.05 Acceptance 4
503.03 CONSTRUCTION OF SUBGRADE 4
503.03.01 Preparation of Subgrade 4
503.03.02 Mixing 4
503.03.03 Placing 5
A. Weather Limitations 5
B. Equipment 5
C. Thickness of Lifts 5
503.03.04 Compaction 5
503.03.05 Surface Finish 5

504 CEMENT TREATED BASE 5
504.01 DESCRIPTION 5
504.02 MATERIALS 6
504.02.01 Aggregate 6
504.02.02 Portland Cement 6
504.02.03 Water 6
504.02.04 Asphalt Materials 6
504.02.05 Mix Design and Certification 6
504.03 CONSTRUCTION 6
504.03.01 Mixture 6
504.03.02 Weather Limitations 7
504.03.03 Equipment 7
A. Hauling Equipment 7
B. Spreading Equipment 7
C. Other Equipment 7
D. Compacting Equipment 7
504.03.04 Hauling and Placing 8
504.03.05 Thickness and Number of Layers 8
504.03.06 Construction Joints 8
504.03.07 Compaction 8
504.03.08 Surface Finish 9
504.03.09 Bituminous Curing Seal 9
504.03.10 Care of Work 9
504.03.11 Modification of Equipment and Methods 9
504.03.12 Timing of Operations, Adequacy of Organization, and Rejection of Mixture 10
504.03.13 Handling Traffic Over Cement-Treated Base 10
504.03.14 Testing 10
A. In-Place Sample 10

505 ASPHALT CONCRETE PAVEMENT 10
505.01 DESCRIPTION 10
505.02 MATERIALS 11
505.02.01 General 11
505.02.02 Asphalt Cement 11
505.02.03 Aggregates 11
505.02.04 Mineral Filler 11
505.02.05 Additives 11
505.02.06 Composition and Proportion of Mixtures 11
505.02.07 Mix Formulas 12
505.02.08 Recycled Asphalt Pavement (RAP) Materials Permitted 12
505.02.09 Tolerances 12
505.02.10 Feathering 13

505.03 CONSTRUCTION 13
505.03.01 Prepaving Conference 13
505.03.02 Preparation of Bases 13
505.03.03 Reconditioning Old Roadbed 13
505.03.04 Tack Coat 13
505.03.05 Mixing 14
505.03.06 Placing 14
505.03.07 Paving Plant and Equipment 15
505.03.08 Weigh Scales 15
505.03.09 Hauling Equipment 15
505.03.10 Asphalt Concrete Pavers 15
505.03.11 Weather Limitations 16
505.03.12 Compaction 16
505.03.13 Compactors 16
A. Steel Wheel Rollers 16
B. Vibratory Rollers 16
C. Pneumatic Rollers 17
505.03.14 Density Requirements 17
505.03.15 Transverse Joints 18
505.03.16 Construction Joints 18
505.03.17 Thickness and Number of Layers 19
505.03.18 Pavement Samples 19
505.03.19 Pavement Smoothness 19
505.03.20 Special Protection Under Traffic 20

506 PORTLAND CEMENT CONCRETE PAVEMENT 20

506.01 DESCRIPTION 20
506.02 MATERIALS 20
506.03 CONSTRUCTION 20
506.03.01 General 20
506.03.02 Preparation of Concrete Mix 20
506.03.03 Hauling 21
506.03.04 Forms 21
506.03.05 Handling and Placing 21
506.03.06 Preparation of Roadway 21
506.03.07 Weather Limitations 22
506.03.08 Slip Form Paving 22
506.03.09 Tamping and Screeding 23
506.03.10 Finishing 23
506.03.11 Joints 23
506.03.12 Tolerances 23
506.03.13 Curing 24
A. Curing of Concrete 24
B. Protection of Concrete 24

507 CURBS, GUTTERS, DRIVEWAYS, AND SIDEWALKS 24
507.01 DESCRIPTION 24
507.02 MATERIALS 24
507.02.01 General 24
507.02.02 Portland Cement Concrete for Extrusions 25
507.02.03 Portland Cement Concrete 25
507.02.04 Aggregate 25
507.03 CONSTRUCTION 25
507.03.01 Preparation of Base 25
A. Earthwork 25
B. Aggregate Foundation or Bedding 25
C. Base for Portland Cement Concrete 25
507.03.02 Forms 26
A. Forms 26
507.03.03 Equipment 26
507.03.04 Placing Material 26
A. Portland Cement Concrete 26
507.03.05 Finishing 26
A. General 26
B. Portland Cement Concrete 27
507.03.06 Curing Portland Cement Concrete 27
507.03.07 Joints in Portland Cement Concrete 28
A. Contraction Joints in Walks and Incidental Surfacing 28
B. Contraction Joints in Curbs 28
C. Requirements Near Existing Structures 28
507.03.08 Dowels, Tie Bars, Reinforcing 28

508 GEOTEXTILE FABRICS 28
508.01 GENERAL 28
508.02 MATERIALS 28
508.03 CONSTRUCTION 28
508.03.01 General 28
508.03.02 Subgrade Geotextile 28
508.03.03 Pavement Overlay Geotextile 29
A. General 29
B. Weather Limitations 29
C. Surface Preparation 29
D. Sealant Application 29

509 COLD PLANE PAVEMENT REMOVAL 30
509.01 GENERAL 30
509.02 WORKMANSHIP 30
509.02.01 Equipment 30
509.02.02 Pavement Removal 30
509.02.03 Surface Tolerance 30
509.02.04 Disposal of Materials 30

510 VACANT 30

511 ADJUSTMENT OF EXISTING STRUCTURES TO GRADE 31

511.01 DESCRIPTION 31
511.02 MATERIALS 31
511.02.01 General 31
511.03 CONSTRUCTION 31
511.03.01 Excavation and Backfill 31
511.03.02 Salvage of Frames, Covers, and Grates 31
511.03.03 Raising Tops of Masonry Structures 31
511.03.04 Lowering Tops of Masonry Structures 32
511.03.05 Adjusting Metal Structures 32

501 SUBGRADE

501.01 DESCRIPTION

This section covers work necessary for preparation of the subgrade, complete. See also Section 203 (Clearing and Grubbing) and Section 204 (Excavation, Embankment, Bedding, and Backfill).

Subgrade is defined as the area of new or existing roads, streets, alleys, driveways, sidewalks, or locations upon which additional materials are to be placed as a part of work covered in other sections or by future work. Where applicable, subgrade may be considered to extend over the full width of the specified base course.

501.01.01 Untreated Subgrade

The material placed in fills or unmoved from cuts in the normal grading of the roadbed and which is brought to true line and grade, shaped and compacted as required by these specifications to provide a foundation for the pavement structure.

501.02 MATERIALS

501.02.01 Water

Conform to the requirements in Subsection 205.02.11 (Water).

501.03 CONSTRUCTION

501.03.01 Preparation

In advance of setting line and grade, complete clearing and grubbing as specified in Section 203 (Clearing and Grubbing) of these specifications. Drain all depressions or ruts which contain water. Blade and shape subgrade to remove irregularities and secure a uniform surface.

Subgrade upon which pavement, sidewalk, curb and gutter, driveways, or other structures are to be directly placed shall not vary more than .5 inch from the specified grade and cross section. Subgrade upon which subbase or base material is to be placed shall not vary more than .5 inch from the specified grade and cross section at any point. Variations within the above specified tolerances shall be compensating so that the average grade and cross section specified are met.

In advance of setting line and grade, the Contractor shall clear and dispose of brush, weeds, vegetation, grass and debris from the subgrade. The Contractor shall drain all depressions or ruts which contain water.

Prior to starting subgrade work, including backfill, all underground work contemplated in the area of the subgrade shall be completed. This requirement includes work on the Contract, work to be performed by the City or by others.

The Contractor shall remove all soft or otherwise unsuitable material as directed and replace with approved material from the excavation. The Contractor shall compact to a line 1 foot beyond the edge of paving, curb or form.

Subgrade areas which cannot be compacted to specified density, but in the judgment of the City Engineer otherwise meet the requirements herein, may be removed and aerated or stabilized with an approved soil stabilizing material, all at no additional expense to the City.

Subgrade materials which cannot be compacted to specified density because of excess moisture shall be dried out to bring materials to the optimum moisture content. The Contractor shall aerate, drain, rehandle, or by other means at their option remove the excess moisture. Unless otherwise specified in the special conditions, all costs involved in the removal of excess moisture from the subgrade material will be considered incidental and be included in the various other items of work in the Proposal.

501.03.02 Grading of Areas Not to be Paved

When specified, areas within and adjacent to the project which are intended for lawns, planting areas, flower beds and similar uses shall be finished with 4 inches of topsoil and graded smooth as directed. Topsoil, for such finishing shall be fertile, loamy natural surface soil consisting of sands, silts, clays and organic matter and shall be free of toxic substances, weeds, roots, refuse, sticks, large rocks or lumps. Topsoil available from required excavation shall be used to the greatest extent possible in this work.

501.03.03 Overexcavation and Foundation Stabilization

When, in the opinion of the City Engineer, unsuitable material or other conditions are discovered which render the subgrade, unable to be compacted to the specified density, then the City Engineer may order the Contractor to remove and dispose of the unsuitable material and then backfill with crushed rock as specified in the applicable portions of Section 204 (Excavation, Embankment, Bedding, and Backfill).

501.03.04 Embankment Construction

The Contractor shall place embankments and fills of all kinds in approximately horizontal layers of a maximum of 8 inches in thickness and compact each layer separately and thoroughly to the density specified. No fragments of rock shall be larger than 6 inches in any dimension.

In the immediate vicinity of curbs, walks, driveways, inlets, manholes and similar structures, in holes and where embankment and fill materials cannot be reached by the normal compacting equipment, the Contractor shall compact to specified density by approved methods.

The Contractor shall exercise caution to ensure that embankment construction and fill does not move, endanger or overstress any structure. The Contractor shall place and compact embankments at the end of bridges prior to the time that work begins on the bridge.

Embankments shall not be constructed when the embankment material, or the embankment on which it would be placed is frozen.

501.03.05 Slides and Slipouts

Material outside the planned roadway or ditch slopes which is unstable and constitutes potential slides, in the opinion of the City Engineer, material which has come into the roadway, channel or ditch, and material which has slipped out of new or old embankments shall be excavated and removed. The material shall be excavated to designated lines or sloped either by benching or in such manner as directed by the City Engineer. Such material shall be used in the construction of the embankments or disposed of as directed by the City Engineer.

The above provisions shall not be so construed as to relieve the Contractor of their obligation to maintain all slopes true and smooth.

501.03.06 Slopes

Excavation and embankment slopes shall be finished in conformance with the lines and grades shown on the plans.

501.03.07 Finishing and Cleanup

All roadbeds, planting areas, ditches, embankments and other areas on which earthwork is performed shall be trimmed reasonably close to established lines, grades, and cross sections and shall be finished in a thoroughly workmanlike manner. They shall be kept free, throughout the work, of debris and foreign matter of all kinds and prior to final acceptance the entire right-of-way shall be cleaned up and finished as directed.

501.03.08 Compaction and Density Requirements

The density of compacted materials in place will be determined by AASHTO T180 as specified.

The Contractor shall compact all embankments, fills and backfills to a minimum density in place of 95% of maximum density.

Roadbed cuts and foundations for structures to a depth of 1 foot below established subgrade or foundation elevation shall be 3-inch maximum material and shall be compacted to a minimum density in place of 95% of maximum density.

Final subgrade proof-roll with 10 CY truck loaded with rock is required prior to placing aggregate base. City Inspector must be present for proof-roll.

502 WATERING

502.01 DESCRIPTION

This section covers work necessary to furnish and apply water for roadway excavations, fills, subgrades, roadbeds, backfill, subbases, bases, and surfacings, and water used for the alleviation or prevention of dust within the project limits.

502.02 MATERIALS

502.02.01 Water

Water shall be free of silts and other deleterious matter. Make all necessary arrangements and pay all costs for obtaining water. Maintain an adequate supply of water at all times to complete the required work.

502.03 CONSTRUCTION

The Contractor shall make all arrangements necessary for the procurement of water and its application. The Contractor shall obtain a hydrant meter with backflow device from the City Engineer for the purposes of measuring all water used on the project.

Water by means of tank trucks equipped with spray bars, by hose and nozzle, or by other approved equal means which ensure uniform and controlled application. The use of splash boards will not be permitted without prior approval.

Perform watering at any hour of the day and on any day of the week as necessary.

503 AGGREGATE BASES

503.01 DESCRIPTION

This section covers work necessary to furnish and place one or more courses of aggregates and water, as base, on a prepared surface.

503.02 MATERIALS

Aggregates for aggregate base shall be crushed rock.

503.02.01 Aggregate

Crushed aggregate shall conform to requirements of Section 205 (Materials—Types and Use) and to additional requirements contained herein.

503.02.02 Sand Equivalent

Base aggregates to be incorporated in the work shall have a sand equivalent of not less than 35 when tested in conformance with AASHTO T 176.

503.02.03 Liquid Limit and Plasticity

Base aggregate shall meet the requirements for liquid limit and plasticity index of Subsection 205.02.12.B (Materials).

503.02.04 Grading Requirements

The base aggregates shall be uniformly graded from coarse to fine and shall conform to one or another of the following grading requirements as specified:

SIEVE SIZE	Percentages (by weight)				
	Separated Sizes				
	2½"-0	2"-0	1½"-0	1"-0	¾"-0
3"	100				
2½"	95-100	100			
2"		95-100	100		
1½"			95-100	100	
1¼"	55-75				
1"		55-75		90-100	100
¾"			55-75		90-100
½"				55-75	
⅜"					55-75
¼"*	30-45	30-45	35-50	40-55	40-60

*Of the fraction passing the ¼-inch sieve, 40% to 60% shall pass the no. 10 sieve.

For determination of sizes and grading conform to AASHTO T 27. Where 1-inch minus base aggregate is approved for use, at least 70% (by weight) of the material passing the ¼" sieve but retained on the no. 10 sieve shall have at least 1 mechanically fractured face.

503.02.05 Acceptance

Materials will be subject to acceptance as follows:

Crushed aggregate will be sampled for acceptance at 1 or more of the following times as determined by the City Engineer.

1. In its final state on the roadbed after all processing and prior to the placement of subsequent surfacing materials.
2. In the stockpile after all shaping work has been completed.

503.03 CONSTRUCTION OF SUBGRADE

503.03.01 Preparation of Subgrade

Ensure that all surfaces and materials on which subbase or base is to be constructed are firm and have been prepared as specified in the applicable portions of Section 501 (Subgrade).

503.03.02 Mixing

Mix to provide a homogeneous mixture of unsegregated and uniformly dispersed materials which will compact to not less than 95% maximum density as specified in Subsection 503.03.04 (Compaction). Add water during mixing in amount sufficient to provide optimum moisture content plus or minus 2 percentage points.

503.03.03 Placing

A. Weather Limitations

When the weather is such that satisfactory results cannot be secured, the Contractor shall suspend operations. Place no surfacing materials in snow or on a soft, muddy, or frozen subgrade. City will not be liable to damages or claims of any kind or description by reason of operations being suspended due to weather limitation.

B. Equipment

Furnish equipment that will provide for efficient and continuous operations insofar as practicable.

Aggregate bases shall be deposited on the roadbed at a uniform quantity per linear foot so that the Contract will not resort to spotting, picking up, or otherwise shifting of aggregate base material. Segregation of aggregates shall be avoided and the material as spread shall be free of pockets of coarse or fine material.

Spreading equipment shall have an adjustable screed or strike-off assembly and it may have a receiving, mixing, and distribution system. It may be a complete and integral unit, self-propelled and powered; a crawler-track or wheeled type tractor intimately combined with a receiving, mixing, spreading, and screeding unit attached thereto; or a heavy-duty self-propelled grader, of an approved type, equipped with at least an 8-foot blade. Equipment shall be capable of spreading or striking off material to the designed line, grade, and transverse slope with surface texture of uniform appearance without excessive segregation or fracture of material.

Spreading equipment may be provided with an automatic control system if Contractor so elects or if specified.

C. Thickness of Lifts

If the required compacted depth of the base course exceeds 6 inches, construct in 2 or more layers of approximately equal thickness. Maximum compacted thickness of any 1 layer shall not exceed 6 inches. Place each layer in spreads as wide as practicable and to full width of the course before a succeeding layer is placed.

503.03.04 Compaction

At the time compaction begins, the materials shall be at optimum moisture content, plus or minus 2%. Compaction of each layer shall continue until a density of 95% is reached. Water shall be added to the materials, as necessary during the compaction, to maintain the proper moisture content and upon completion of each layer, the Contractor shall maintain the materials in specified conditions until it is covered by the following layer or course.

503.03.05 Surface Finish

Surface of the base shall parallel the established cross section and grade for the finished surface within 0.04 foot. The finished surface of base, when tested with a 12-foot straight edge shall not vary from the testing edge by more than 0.04 foot at any point.

504 CEMENT TREATED BASE

504.01 DESCRIPTION

This section covers the work necessary for the furnishing and construction of the cement treated base complete.

504.02 MATERIALS

The CTB mixture shall be comprised of aggregate, Portland Cement, and water in the proportions and amounts established by the mix design. The cement content normally is to be between 4.5 and 5.5% of the dry weight of the aggregate. The mixture shall be proportioned to provide for a minimum 28-day ultimate compressive strength of 1,000 PSI. The proportions of the materials will be subject to change as required to meet the herein specifications.

In all plants, the weight or rates of feed of aggregates and water shall be within 5% of the amounts of each material that are specified. The weights or rates of feed of cement shall be such that the variations in cement content in samples, taken from any part of a mixed batch or from different batches, or from time to time from the product of continuous mixers, or from mixtures spread on the roadbed, shall not have variations above or below the cement content designated by the City Engineer of more than 0.5 of a percentage point.

504.02.01 Aggregate

The aggregate shall meet the requirements of Section 503 (Aggregate Bases) and shall be crushed rock or gravel including sand conforming to specifications.

504.02.02 Portland Cement

Cement to be used shall be Portland Cement Type I or Type II conforming to the requirements of AASHTO M 85 for low alkali cement. The total alkali content shall not exceed 0.8% and the tricalcium aluminate content shall not exceed 10%.

504.02.03 Water

Water used in mixing shall be clean and free of oil, salt, acid, alkali, sugar, vegetable matter, or other substance injurious to the finished product, and shall meet the requirements of AASHTO T-26.

504.02.04 Asphalt Materials

The asphalt used for the curing seal shall be emulsified asphalt meeting the requirements of Subsection 205.02.13 (Asphalt Materials).

504.02.05 Mix Design and Certification

Prior to production, the Contractor shall furnish the City Engineer a complete mix design showing the proportions of all constituents proposed for use and strength test results of samples prepared using the proposed proportions and constituents for a minimum of 7 day, 14 day, and 28 day curing periods.

504.03 CONSTRUCTION

Prior to the production or placing of cement treated base, complete all utility work and prepare the subgrade in strict accordance with Section 501 (Subgrade).

504.03.01 Mixture

The CTB mixture shall be mixed at a centrally located plant of the batch type or of the continuous mixing type, capable of providing a mix of aggregate, cement, and water of uniform proportions and consistency as designated by the mix design.

The charging of the materials into the mixer shall be by means whereby the quantities of the several materials are accurately controlled. Mixing shall continue until a uniform and homogeneous mixture of aggregate, cement, and water has been obtained. In general, the time of mixing shall not be less than 30 seconds, except that the time may be reduced when tests indicate that the requirement for the variation of cement content, as specified, can be consistently complied with.

504.03.02 Weather Limitations

The CTB shall be constructed in accordance with the weather limitations as set forth in Section 701 (Concrete Structures).

504.03.03 Equipment

Equipment used shall conform to the following requirements unless otherwise approved.

A. Hauling Equipment

Vehicles for hauling the mixture shall be watertight, agitating, or nonagitating, and capable of discharging the mix without waste and with practicable minimum amount of separation.

B. Spreading Equipment

Spreading of the CTB mixture shall be by a machine, which has an adjustable screed or strike-off assembly and it may have a receiving and distribution system. The equipment shall be capable of spreading the material and striking it off to the required thickness and the designated line, grade, and transverse slope without segregation, dragging, or fracture of material. The spreading and screeding equipment may be a complete and integral unit, self-propelled and powered; a crawler-track or wheeled type tractor intimately combined with a receiving, spreading, and screeding unit attached thereto; or, if approved by the City Engineer a heavy duty self-propelled grader, equipped with at least an 8-foot blade. The screed or strike-off assembly shall operate by an approved action, which produces specified results and a surface texture of uniform appearance.

Spreading equipment which rides on freshly spread material and produces tracks or partially compacted areas thereon will be acceptable provided no displacement of material or filling of tracks occur, and provided further that the tracks are not of such depth as to be visible after compaction is completed.

The spreading equipment may be provided with a control system automatically controlling the laying of the mix to specified transverse slope and longitudinal grade by means of actuation from an independent line and grade control reference, if the Contractor so elects.

C. Other Equipment

Equipment shall be provided to apply water by spray method to the CTB mixture during its compaction, the spray attachments being of a type that will produce a uniform and controlled fine spray. Equipment for application of the bituminous curing seal shall provide application by pressure spray method in a uniform and controlled application. Motor graders shall be available for correction of unavoidable segregation at edges of the mix.

D. Compacting Equipment

Compaction shall be with vibrating type, pneumatic tire type, steel wheel type, or other approved type compactor, as the Contractor may elect; provided however, that compactors with lugs, projections, or other features that would leave ruts, holes, grooves, or uneven surfaces in the CTB after compaction or which would loosen the mixture while operating will not be permitted. Either a pneumatic tire roller or a smooth steel wheel roller shall be provided for the final rolling and compacting of the mixture.

504.03.04 Hauling and Placing

Maintain the surface of the underlying course in a wet condition by sprinkling just in advance of placing. The CTB mixture shall be delivered and deposited without delay. Mixture which has begun to harden and take an initial set prior to placement, or which has been retempered in transit with water, will be rejected and shall be wasted at the sole expense of the Contractor.

The mixture shall be delivered to the spreading machine by direct deposit in the receiving hopper, by placing in windrows in front of the machine, or by other means acceptable to the City Engineer. If material is placed in windrows it shall be deposited on the roadbed at a uniform quantity per lineal foot, which quantity shall be sufficient to provide the required compacted thickness without resorting to excess spotting, picking-up, or otherwise shifting or the mixture. The mixture shall be delivered and placed without hauling equipment operating over any uncured material.

The mixture shall be spread and screeded by specified equipment in 1 or more layers to provide the compacted thickness called for by the drawings. Placing shall be in strip widths which will hold the number of longitudinal joints to a practicable minimum, normally to not less than 10-foot widths.

The depositing and spreading shall progress continuously without breaks insofar as is practicable. Should stoppage of operations be of such duration as to allow the mixture to take its initial set, the Contractor shall construct a transverse construction joint as hereinafter provided.

The mixture shall be spread and screeded to required thickness and to designated line, grade, and transverse slope without segregation, dragging, or fracture of the components of the mixture.

Motor graders shall be used to correct unavoidable segregation at edges and to reprocess minor areas of deficiency.

504.03.05 Thickness and Number of Layers

If the required compacted depth of CTB exceeds 6 inches, it shall be constructed in 2 or more layers of approximately equal thickness. The maximum compacted thickness of any 1 layer shall not exceed 6 inches.

504.03.06 Construction Joints

When it is necessary, due to the termination of the day's run or to shutdown, to discontinue placing the mixture for a period of time which will allow the placed mixture to take its initial set, the Contractor shall construct a temporary transverse construction joint. This joint shall be formed with a wooden block, such as a 6-inch thick timber with width equal to or greater that the depth of the course, or with other devices acceptable to the City Engineer, extending across the width of the strip and held firmly against the vertical end of the strip of mixture which is to terminate at the joint. The top of the joint form shall be set true to the slope and grade of the CTB and shall be firm under pressure from compacting equipment. When construction of the CTB is resumed, the form shall be removed without damage to the adjacent CTB.

504.03.07 Compaction

Compaction of the CTB mixture with specified compactors shall begin as soon as it has been spread and shall be continuous until completion. Not more than 60 minutes shall elapse between the start of the mixing and the time of starting compaction of the CTB mixture on the prepared subgrade. Compaction shall begin at edges and shall be controlled to prevent breakdown at the sides of a strip.

Successive passes of the compactor shall be so spaced that no more than 75% of the compactive width of the compactor shall be on an uncompacted area at any time.

During compacting, sprinkling with water by fine spray application shall be done at the time and in the amounts required. Surfaces of uncompacted, partially compacted mixture shall be kept moist at all times until the bituminous seal has been placed thereon.

Compaction on the completed CTB shall be 95% of the maximum density indicated by the mix design.

504.03.08 Surface Finish

The CTB surface shall parallel the cross section and grade of the finished surface within 0.04 foot, and when tested with a 10-foot straight edge shall not vary from the testing edge by more than 0.03 foot at any point.

When Portland Cement concrete pavement is to be placed on the CTB, the surface of the CTB at any point shall not extend above the grade established by the Engineer. The specified finish shall be attained by the following method.

After compaction of the final lift, the surface of the CTB shall be brought within the specified tolerances by trimming with a subgrade planner, by motor grader equipped with an electronically controlled blade or by grinding. Areas on which trimming or grinding is performed shall be rolled until a smooth surface is attained.

The excess material may be used at other locations in the work area provided said excess material complies with applicable specification requirements.

504.03.09 Bituminous Curing Seal

As soon as possible after each layer of the CTB is constructed; as herein- before specified, and while it is still moist, the surface and exposed edges shall be covered with a bituminous curing seal. The liquefied asphalt shall be applied at a uniform rate between .25 gallon and .35 gallon per square yard by a pressure spray method.

After the curing seal has been applied, it shall cure for a period of 4 days and during this period no vehicle shall be permitted to use the section. In case of damage to the curing seal, after application and during the curing period, the damaged section shall be repaired by the Contractor immediately by resealing at their own expense.

The curing seal on any lift of CTB may be omitted if, within 2 hours after the start of mixing of the preceding lift of CTB, a succeeding lift of material (CTB, bituminous base or asphalt concrete) is placed over the preceding lift. Vibratory rollers will not be permitted in the compaction of any succeeding lift of CTB, bituminous base, or asphalt concrete during the period of time from 2 to 96 hours after the mixing of any of the underlying lifts of CTB.

504.03.10 Care of Work

During the construction of the CTB, the Contractor shall exercise care to protect the work from damage. Following construction of each strip and each layer of the base and following construction of the entire course of the CTB, the Contractor shall perform such work as specified and as the City Engineer may determine to be necessary to prevent raveling and rutting, to prevent segregation of materials, and to maintain the layer or course of the CTB to the specified compaction and surface finish; all until the strip, layer, or course is covered by a following layer or course of material as specified or until all work under the Contract is completed.

504.03.11 Modification of Equipment and Methods

On tapers and other areas of irregular shape, limited length, restrictive width or other condition where the City Engineer determines that full compliance with the above equipment and construction requirements is not practicable, the specified equipment and construction requirements may be modified, subject to approval by the City Engineer.

504.03.12 Timing of Operations, Adequacy of Organization, and Rejection of Mixture

All operations involved in constructing the CTB shall be so timed and coordinated that regardless of daily or seasonal variations in weather, temperature and humidity, such work shall result in a finished CTB conforming in all respects to specified requirements.

In this respect, the Contractor shall provide and have readily available at all times adequate equipment, tools, material, and labor; and shall achieve the hauling, spreading, compacting, and trimming of the CTB mixture within two hours after mixing.

Any CTB mixture not placed and trimmed within this two-hour period shall be subject to rejection, wasting, removal, and replacement as the City Engineer determines to be applicable, and all costs involved in such removal, wasting, and replacement shall be borne by the Contractor.

504.03.13 Handling Traffic Over Cement-Treated Base

At locations where traffic must be routed over the cement-treated base, the CTB mixture shall be made with Type III or Type IIIA (high early strength) cement to expedite development of strength at an early date. Any extra costs of using high early strength cement shall be considered as incidental, with payment therefor covered in the pay item "Portland Cement in CTB Mixture."

If the City Engineer so directs, traffic over recently constructed CTB shall be controlled as to speed and routing.

504.03.14 Testing

Aggregate and cement will be subject to acceptance as specified under Subsection 205.02.12.B (Materials). Plant mixed mixtures will be subject to final acceptance after blending and mixing either at the plant or place of delivery. Acceptance will be based on periodic sample taking.

When specified the Contractor shall furnish certified laboratory tests that show results of the tests at no expense to the City. The City Engineer may do sampling and/or testing of the materials. If evidence of noncompliance with the requirements exists, additional tests may be required to assure that the materials meet the requirements as specified at the sole expense of the Contractor.

A. In-Place Sample

The City Engineer shall be permitted to cut samples or to take cores, or to require the Contractor to cut samples or take cores, from the full depth of the compacted mixture or from the separate layers and courses thereof for testing purposes, and at such locations and at such frequencies as the City Engineer determines necessary for proper representation. Sampling shall be at the expense of the Contractor. Where samples have been taken and the samples show deficiencies according to these specifications, the Contractor shall repair the cuts or cores with like material and shall make repairs to the pavement as directed by the City Engineer, all at no expense to the City.

505 ASPHALT CONCRETE PAVEMENT

505.01 DESCRIPTION

This section covers work necessary for the construction of hot mix asphalt pavements under prepared foundations or base surfaces.

Hot mix asphalt concrete is defined as a mixture of asphalt cement; well graded, high quality aggregate; mineral filler and additives as required; heated and plant mixed into a uniformly coated mass, hot laid on a prepared foundation and compacted to specified density.

505.02 MATERIALS

505.02.01 General

Asphalt and aggregate shall meet ODOT requirements for Level II Light Duty AC and will be subject to approval preceding mixing. Plant mixed mixtures will be subject to final approval after blending and mixing, either at the plant or at the place of delivery prior to rolling. Approval will be based on periodic sampling and testing of the materials.

505.02.02 Asphalt Cement

Asphalt materials incorporated in the mix shall be level II grade asphalt that conforms to requirements of Section 205 (Materials—Types and Use).

505.02.03 Aggregates

Aggregates shall conform to requirements of Section 205 (Materials—Types and Use).

505.02.04 Mineral Filler

Mineral filler shall conform to the requirements of AASHTO M 17.

Collector dust may be used as mineral filler, in whole or in part, provided the dust or the resultant mineral filler mixture conforms to the above requirements.

505.02.05 Additives

Additives and admixtures may be used to prevent stripping or separation of bituminous coatings from aggregates, and to aid in the mixing or use of bituminous mixes or for experimental purposes. Use admixtures and additives of standard recognized products of known value for the intended purpose and obtain approval on the basis of laboratory tests prior to their use. They shall have no deleterious effect on the bituminous material and shall be complete miscible.

505.02.06 Composition and Proportion of Mixtures

The class of asphalt concrete to be used shall be as shown and shall conform to the following requirements:

Sieve Size Passing	DENSE GRADED Percentage of Total Aggregate (by weight)		
	Class "B"	Class "C" (Mod.)	Class "D"
1"	99-100	----	----
¾"	92-100	99-100	----
½"	75-94	91-100	99-100
¼"	50-70	58-73	85-100
#10	21-41	24-36	37-57
#40	6-24	8-18	13-29
#200	2-7	3-8	4-9
Asphalt Cement**	4-8	3-8	4-8

* Including Lime or Cement Filler.
**Percent of total mix (by weight).

The amount of new asphalt cement to be added to the recycled mixture will vary from 3-8%.

Class "B", "C", and "D" asphalt concrete shall meet the following qualifying test requirements:

Test	Test Method	Requirements
Stability, First Compaction	OSHD Standard Test*	35 min. (residential streets)
Voids, First Compaction	OSHD Standard Test*	7% maximum
Voids, Second Compaction	OSHD Standard Test*	1% minimum
Retained Strength	AASHTO T 165-Modified	70% minimum

*Available from Engineer or Materials, ODOT, Salem, Oregon 97310.

505.02.07 Mix Formulas

The Contractor may be required to submit a job-mix formula for review by the City Engineer.

The job-mix formula shall indicate the gradation of each of the several aggregate constituents to be used in the mixture and shall establish the exact proportion of each constituent to be used to produce a combined gradation of aggregate within the appropriate limits stated above.

The job-mix formula shall also indicate the ASTM bulk specific gravity of each aggregate constituent, the measured maximum specific gravity of the mix at the optimum asphalt content determined in accordance with ASTM D 2041, all properties as stated in Subsection 505.02.06 (Composition and Proportion of Mixtures) of these specifications for at least 4 different asphalt contents other than optimum, 2 of which will be below optimum and 2 of which will be above optimum, the percent of asphalt lost due to absorption by the aggregate, and any other information pertinent to the design of the mix.

505.02.08 Recycled Asphalt Pavement (RAP) Materials Permitted

If approved by the City Engineer, the Contractor may use processed recycled asphalt pavement materials in the production of new asphalt concrete pavement. The RAP materials proposed for use in the recycled mix shall contain hard, sound, and durable aggregates, and asphalt of a composition to provide properties equivalent to asphalt as specified in these specifications when in the mix.

505.02.09 Tolerances

After the mix formula is submitted, the several constituents shall meet the following tolerances, but always within the range of proportions specified in Subsection 505.02.06 (Composition and Proportion of Mixtures):

Asphalt Concrete Mix Tolerances	
Constituent of Mixture	**Specifications**
Aggregate passing 1", ¾", ½" sieves	Within the range of the proportions specified in Subsection 505.02.06 (Composition and Proportion of Mixtures)
Aggregate passing ¼" sieve	6.0%
Aggregate passing no. 10 & no. 40 sieve	5.0%
Aggregate passing no. 200 sieve	2.0%
Asphalt cement	0.5%
Temperature of mixture at time it is placed in final position	240-300°F

Each day the City Engineer shall be permitted to take as many samples as they consider necessary for checking the uniformity of the mixture. When unsatisfactory results or other conditions make it necessary, the City Engineer may require a new mix formula.

Should a change in source of material be made, or should conditions arise which the City Engineer determines to be justified, the Contractor shall establish a new job-mix formula.

The materials to be used in the work shall be of such nature that a mixture of them, proportioned in accordance with the mix formula, will have a retained strength of no less than 70% when tested in accordance with AASHTO T 165 as modified by OSHD test methods. The City Engineer shall be permitted to take as many samples as they consider necessary for checking the uniformity of the mixture.

505.02.10 Feathering

Asphalt concrete for use in feathering at curb or gutter lines, at intersections, at connections with existing pavement, in spot patching, and under similar conditions, shall be a fine mix of asphalt concrete such as ⅜" mix (use ODOT spec).

505.03 CONSTRUCTION

505.03.01 Prepaving Conference

The Contractor and their supervisory personnel plus any subcontractors and their supervisory personnel who are to be involved in the paving work shall meet with the Project Manager and their representatives for a prepaving conference at a time mutually agreed upon. At this conference, the Contractor shall discuss their methods of accomplishing all phases of the paving work. The plan of the work, order of paving and other details of performance shall meet with the approval of the City Engineer.

505.03.02 Preparation of Bases

All pavement bases and foundations constructed under this Contract shall be completed and finished as prescribed under the applicable specification for its construction.

Manholes, inlets, water valve boxes, and other such structures shall have been completed, cured, and otherwise prepared, as applicable, and made clean and ready for asphalt pavement. Unless otherwise approved, manholes shall be adjusted so that they can be paved over and then later adjusted as shown on the standard drawing. Paint vertical surfaces that will come in contact with asphalt pavement with tack coat material to provide a good bond and seal. Cover top surfaces with paper or other material to prevent adherence of asphalt pavement, tack coat, or prime coat.

505.03.03 Reconditioning Old Roadbed

This work consists of reconditioning and preparing previously constructed roadbed subgrades, existing stone bases and surfacings, and existing pavements; none of which were constructed by the Contractor under the pertinent Contract but on which an additional layer or course of material is to be placed.

Existing aggregate subbases, bases, and surfacings shall be bladed, scarified, leveled, and compacted in conformance to lines, grades, and cross sections as established and the density and tolerance requirements of Section 503 (Aggregate Bases).

Prelevel uneven or broken bituminous, cement concrete, or brick surfaces with asphalt concrete as specified. Spread and compact preleveling asphalt concrete to the density and surface condition as directed.

505.03.04 Tack Coat

Asphalt shall consist of emulsified asphalts per Section 205 (Materials—Types and Use) or an approved equal.

Spread asphalt by means of pressure-spray equipment which will provide uniformity of application at prescribed rates. Do not apply aggregate cover material to the tack coat. Asphalt shall be applied to the prepared surface at a rate of 0.05 gallons per square yard for clean surfaces and

up to 0.12 gallons per square yard for dirty surfaces. The tack coat shall not be applied during wet or cold weather or during darkness and apply only so far in advance as is appropriate to maintain a tacky, sticky condition of the asphalt. Apply tack coat in such a manner as to offer the least interference to traffic and to permit at least 1-way traffic without pickup or tracking of asphalt.

505.03.05 Mixing

Mix the asphalt concrete by combining aggregate, asphalt, and additives at an approved central mixing plant equipped with controls to accurately measure and monitor the various components of the mix to produce a uniform homogeneous mixture at the specified temperature.

The discharge temperature of the mix will vary with the type of mixing plant, climatic conditions, and other variables. However, the temperature shall be sufficient to provide thorough mixing and coating and to provide a mass viscosity of the mix on the grade which will permit compaction to required density. Mix temperatures and asphalt in storage shall generally not exceed 325°F.

505.03.06 Placing

Conform to the drawing of work, order of paving, and other details of performance as approved. Lift thickness shall be as shown on the drawing or specified.

Unless otherwise approved by the City Engineer, streets shall be paved to final grade using 2 or more lifts. Final lift shall be placed at time as directed by the City Engineer.

Transport the asphalt concrete mixture from the mixing plant to the point of use in trucks. Send no loads so late in the day as to prevent the spreading and compacting of the mixture during daylight, unless approved lighting is provided.

Hot mix asphalt concrete shall normally be placed on dry prepared surfaces and when air temperature in the shade is 40 degrees F (minimum) and rising. Place Class "E" wearing surface only when the existing pavement temperature is at least 60 degrees F. Placing during rain or other adverse weather conditions will not be permitted. The temperature of hot mix at the time it is spread into final position shall be between 240 and 300 degrees F, except Class "E" mix shall be between 200 and 250 degrees F.

Lay the mixture in strips of such width as to hold to a practical minimum the number of longitudinal joints required. The longitudinal joints in any layer of pavement shall be offset from those joints in layers below by not less than 6 inches.

Bituminous paving machines shall be self-contained, power-propelled units, provided with an activated screed or strike-off assembly, heated if necessary, and capable of spreading and finishing layers of bituminous mix material in lane widths applicable to the specified typical sections, and to required thicknesses, lines, grades, and cross sections. Machines used for shoulders and similar construction shall be capable of spreading and finishing to the widths shown.

When the capacity of the paver to properly spread and finish exceeds the rate of delivery of mixture, operate the paver at a reduced and uniform speed to give continuous spreading and finishing.

Take care at all times to prevent segregation in the mixture as evidenced by areas of fine and coarse materials, and correct any such segregation with fresh mixture either spread and worked into the surface or by complete removal and replacement of segregated mixture at no expense to the City. **At no time shall the course aggregate segregated from the mix from hand spreading or raking of joints be scattered across the paved mat.** Such material shall be collected and disposed of.

On areas to be patched with asphalt concrete mixture and on areas of irregular shape or limited size, the spreading and finishing requirements may be modified as approved.

Boils and slicks occurring in the pavement must be immediately removed and replaced with suitable materials, at the sole expense of the Contractor.

505.03.07 Paving Plant and Equipment

All plant and equipment used by the Contractor in the preparation and mixing of asphalt concrete shall conform to the requirements of Subsection 403.33, "Standard Specifications for Highway Construction," as published by Oregon State Highway Division, 1984 Edition.

505.03.08 Weigh Scales

When materials are to be measured for payment by weighing on vehicle scales, the Contractor shall provide the scales and transport the materials to the scales provided.

The vehicle scales furnished shall be accurate within the tolerances required by State law and shall be licensed with the Oregon Department of Agriculture. Scales shall be suitable for the weighing to be done and shall be properly installed and maintained.

At each end of the vehicle scale there shall be a straight approach in the same plane as the platform. The approaches shall be of sufficient length and width to ensure the level positioning of combination vehicles longer than the scale platform during weight determinations. All vehicle brakes shall be released while combination vehicle are being weighed.

Vehicle scales shall be inspected and the accuracy tested every 6 months by either the State Department of Agriculture or a scale service company. Scales installed at a new site shall be inspected and the accuracy tested before use. Testing by a scale service company shall be done by using a minimum of 10,000 pounds of test weights certified by the State Department of Agriculture.

505.03.09 Hauling Equipment

Vehicles used for hauling asphalt concrete mixtures shall have tight, clean, and smooth beds which have been thinly coated with a minimum amount of paraffin oil, lime solution, soapy water or other approved material to prevent the mixture from adhering to the beds. Diesel oil may be used when requested by the Contractor and approved by the City Engineer. Its use will be terminated by the City Engineer if it is not being used as specified or is a source of contamination for the asphalt mix.

During each application of an approved coating material, and prior to loading, the vehicle bed shall be drained of all excess coating material by raising the truck bed, opening belly dump gates or operating the conveyer belt as appropriate for the type of equipment being used.

Vehicles which cause excessive segregation, which leak badly, or which delay normal operations, as such are determined by the City Engineer, shall not be used.

Contractors hauling vehicles shall be so constructed and equipped with covers to protect against moisture and against heat loss, and shall have a ⅜-inch diameter hole near the middle of the left side wall of the bed to allow access for a thermometer.

505.03.10 Asphalt Concrete Pavers

Pavers shall be self-contained, power-propelled units, provided with an activated screed or strike-off assembly, heated if necessary, and capable of spreading and finishing layers of asphalt concrete material in widths applicable to the specified typical sections, and to required thicknesses, lines, grades and cross sections.

Extensions added to the paver when used on travel lanes shall have the same augering and screeding equipment as the rest of the paver.

The paver shall be equipped with a receiving and distribution system of sufficient capacity for a uniform spreading operation and capable of placing the mixture uniformly in front of the screed without segregation of materials.

The paver shall be designed to compensate for minor irregularities of the base on which it is supported so that such will not be reflected immediately in the surface of the layer being placed. The weight of the paver shall be supported on tracks or wheels none of which shall contact the mixture being laid. The contact area of the screed or strike-off assembly shall be uniform over the entire width of the strip of mixture being placed.

The screed or strike-off assembly shall produce a finished surface of the required evenness and texture without tearing, shoving or gouging the mixture. The paver shall be equipped with either a manual or electronic line and grade control.

505.03.11 Weather Limitations

Asphalt concrete mixtures shall be placed on dry prepared surfaces when the air temperature in the shade and the surface temperature is not less than those specified in the following table.

SURFACE TEMPERATURE LIMITATIONS		
Compacted Thickness of Individual Courses	**Travel Lanes/ Wearing Course**	**All Other Courses**
Less than 1½ inches	60°F	55°F
1½ inches to 2½ inches	50°F	45°F
Over 2½ inches and other	40°F	35°F

Placing of any mixture during rain or other adverse weather conditions normally will not be permitted, except that mix in transit at the time these adverse conditions occur may be laid if of proper temperature, if the mix has been covered during transit, if placed on a foundation free of pools, or flow of water and if all other requirements of these specifications are met. Asphalt concrete mixtures shall not be placed when the underlying layer is frozen, or when, in the opinion of the City Engineer, weather conditions either existing or expected will prevent the proper handling, finishing, or compaction of the mixtures.

505.03.12 Compaction

The Contractor will not be permitted to use any equipment which crushes the aggregate to any extent. However, they will be required to obtain the densities required in Subsection 505.03.14 (Density Requirements).

505.03.13 Compactors

Rollers shall be steel wheel, pneumatic tire, vibratory or a combination of these types as the Contractor may elect. They shall be in good condition and capable of reversing without backlash.

A. Steel Wheel Rollers

Steel wheel rollers shall have a minimum gross static weight of 8 tons and a minimum static weight on the drive wheel of 250 pounds per inch of width. For finish rolling a 6-ton minimum gross static weight is acceptable and the 250 pounds per inch of width will not be required.

B. Vibratory Rollers

Vibratory rollers shall be equipped with amplitude and frequency controls and shall be specifically designed for compaction of asphalt concrete mixtures. The rollers shall be capable of frequencies of not less than 2,000 vibrations per minute.

C. Pneumatic Rollers

The pneumatic-tired rollers shall be self-propelled, tandem, or multiple axle, multiple wheel type with smooth-tread pneumatic tires of equal size staggered on the axles at such spacings and overlaps as will provide uniform compacting pressure for the full compacting width of the roller and shall be capable of exerting ground pressures of at least 800 pounds per square inch of tire contact area. Pneumatic-tired rollers shall be fully skirted to insulate the tires from significant heat loss during compaction.

505.03.14 Density Requirements

The density of asphaltic concrete shall be at least 92% of Rice theoretical maximum density as determined in conformance with AASHTO T 209 as modified by OSHD.

For final acceptance of the pavement, the density of each section of pavement will be determined by random acceptance tests using a nuclear gauge or laboratory analysis of the pavement core samples. Density tests will be taken at 5 randomly selected sites for each section of pavement. The average of the 5 density tests will constitute the density of the pavement.

A section of pavement will be the area constructed from 500 consecutive tons of mixture or portion thereof. Acceptance tests will not be made within 1 foot of the edges of the panel or from areas where the specified compacted thickness is less than 1½ inches.

When using a nuclear gauge, 2 readings will be obtained at each site, the second at right angles to the first. The 2 readings will be averaged to obtain the test density. For any section of pavement, if the Contractor requests in writing within 2 work days after nuclear gauge test results are furnished to the Contractor pavement cores will be obtained at the same randomly selected sites used for the nuclear gauge tests. The density of the core samples will be determined by an independent testing laboratory. The average density of these 5 core samples will constitute the in-place density of the section of pavement and will prevail over the nuclear test results. If the density as determined by the core samples does not meet density requirements, the Contractor shall bear the cost of coring and testing.

The City Engineer shall have the right to test any areas that appear defective in compaction. If the areas are found deficient, the City Engineer may require the Contractor to bring the areas into conformance with the specifications.

Acceptance will not be made for mixture compacted to less than 88.0% of the theoretical maximum density (Rice density) or 94% of target density. The City Engineer may decide to allow the deficient pavement to remain in place. In that case, the City Engineer and the Contractor will agree in writing that the pavement will remain in place.

If the Contractor takes core samples to verify the densities, the holes shall be filled with like material and compacted and sealed to the City Engineer's satisfaction. The density of the core samples shall be tested by an independent testing laboratory in accordance with ASTM 2726. All verifying work performed by the Contractor shall be at the Contractor's expense.

Where in-place mixture fails to meet the compaction standard of 92% of theoretical maximum density, the City Engineer may accept the pavement and the Contractor shall place a performance bond with the City Engineer in accordance with the following Bonding Schedule.

Bonding Schedule		
% Maximum Density (Normal Method)	% Pay	Bond Amount
92.0 and above	100	0
91.5 to 91.9	95	5%
91.0 to 91.4	90	10%
90.5 to 90.9	85	15%
90.0 to 90.4	80	20%
89.5 to 89.9	70	30%
89.0 to 89.4	60	40%

505.03.15 Transverse Joints

Form transverse joints by cutting back on the previous run to expose the full depth of the layer or course.

Place a course or strip of asphalt concrete as nearly continuous as practicable. Carefully construct transverse joints using vertical faces and thoroughly compacted to provide a smooth riding surface. Apply a coat of bituminous material to contact surfaces just before mixture is placed against previously rolled mixture. The Contractor shall use a 10-foot straight edge to determine the location of the full depth vertical faces.

At bridge ends or at joints with other rigid type structures, existing bases shall be conditioned and compacted, and place asphalt concrete to extra thickness and compact in transverse direction as well as longitudinally.

When the end of a course or strip of asphalt concrete is to be temporarily subject to traffic, the end shall be left on a bevel of approximately 20:1 (horizontal to vertical), being later cut back to a vertical edge.

505.03.16 Construction Joints

Placing of a course or strip of asphalt concrete shall be as nearly continuous as practicable. Transverse joints shall be carefully constructed and thoroughly compacted to provide a smooth riding surface.

The mixture shall be laid in strips of such widths as to hold to a practical minimum the number of longitudinal joints required. Longitudinal joints in the wearing course shall not occur within the area or width of a traffic lane or auxiliary lane. On median lanes and on shoulder areas such joints shall occur only at points of change in the transverse slopes as shown on the plans or designated by the City Engineer. The longitudinal joints in 1 layer shall offset those in the layer immediately below by a minimum of 6 inches. Underlying longitudinal joints shall be within 12 inches of the edge of a lane or within 12 inches of the center of a lane, except in irregular areas, or if otherwise shown on the plans.

When the end of a course or strip of asphalt concrete is to be temporarily subjected to traffic, the end shall be on a bevel of approximately 20:1 (horizontal to vertical), being later cut back to a vertical edge to provide a fresh surface against which subsequently placed asphalt concrete is to abut.

When placing of asphalt concrete pavement in layers in excess of 2-inch nominal thickness is being performed under traffic, work shall be scheduled in a manner such that at the end of each working day, the full width of the area to be paved shall be completed to the same elevation with no longitudinal drop-offs within this width.

When placing of asphalt concrete pavement in layers of 2 inches or less in thickness is being performed under traffic, work shall be scheduled in a manner such that at the end of each

working shift, 1 strip of new travel lane pavement shall not extend ahead of the adjoining strip of travel lane pavement more than the distance normally covered by each shift.

Where abrupt or sloped drop-offs of greater than 2.5 inches occur within or at the edge of the paved surface, the Contractor shall construct and maintain a wedge of asphalt concrete at a Slope 10:1 or flatter along the exposed joint.

505.03.17 Thickness and Number of Layers

Asphalt concrete shall be placed in the number of courses and to the total compacted thickness per course called for by the typical cross sections given on the plans.

In case the course of pavement involves the placing of a layer of variable thickness, as for leveling existing irregular surfacings, the course may include or consist of a layer of asphalt concrete of variable compacted thickness, the thickness of which layer shall not exceed the following.

Type of Mix	Maximum Compacted Thickness Layers
“B”	3 inches
"C"	3 inches
"D"	1 inches

The top surface of each layer of asphalt concrete shall be spread at grade and cross section closely paralleling the specified top surface of the finished pavement.

505.03.18 Pavement Samples

The City Engineer shall be permitted to cut samples or to take cores from the full depth of compacted mixture or from the separate layers and courses thereof, for testing purposes, and at such locations and at such frequencies as the City Engineer determines necessary for proper representation. Where samples have been taken, and when directed by the City Engineer, the Contractor shall furnish new like material for filling the holes with no extra compensation.

505.03.19 Pavement Smoothness

The top surface of the asphalt concrete pavement, when tested with a 12-foot straightedge either parallel to or perpendicular to the centerline furnished and operated by the Contractor, shall not vary by more than 0.02 foot. The City Engineer will observe this testing and may require additional testing. The means of correction of a surface that does not meet the smoothness requirements shall have the approval of the City Engineer.

When tests show the pavement is not within the above tolerances, the Contractor shall take immediate action to correct equipment or procedures in their paving operation to eliminate the unacceptable pavement roughness.

Water flow testing shall be conducted to verify grade and smoothness unless determined to be unnecessary by the City Engineer. At locations identified by the City, contractor shall provide a flow of water sufficient for the City to determine that the pavement surface has proper flow characteristics and no puddling.

Any surface irregularities exceeding the above tolerances shall be corrected by the Contractor using a method or methods listed herein and approved by the City Engineer.

Corrective Action: Corrective measures by the Contractor requiring one or more of the following actions approved by the City Engineer shall be performed on deficient areas.

1. Remove and replace the surface course.
2. Place an overlay of a thickness approved by the City Engineer.

3. Grind the pavement surface utilizing diamond blades up to a maximum depth of 0.3 inch and apply an emulsion fog coat as directed by the City Engineer.

When utility appurtenances such as manhole covers and valve boxes are located in the traveled way and they are not required to be adjusted or are required to be adjusted before paving, these tolerances will not apply at the utility appurtenance.

All corrective work shall be completed within 10 working days following notification from the City Engineer that the pavement does not meet the specified tolerances, unless otherwise directed by the City Engineer.

All corrective work, including furnishing of materials, shall be performed at the Contractor's expense and no adjustment in contract time will be made for corrective action work.

505.03.20 Special Protection Under Traffic

In addition to other required provisions for traffic, the following shall apply to pavement construction: no traffic or equipment shall come in contact with the compacted mixture until it has cooled and set sufficiently to prevent marking; edges shall be protected from being broken down; and edge drop-offs 1 or more inches in height shall be marked with warning devices visible by day and night to the traveling public, and placed at spacings indicated on the plans or as directed by the City Engineer.

506 PORTLAND CEMENT CONCRETE PAVEMENT

506.01 DESCRIPTION

This section covers work necessary for construction of Portland Cement concrete pavements, with or without reinforcement, on a prepared subgrade or base course, complete.

506.02 MATERIALS

All material shall conform to requirements of Section 205 (Materials—Types and Use).

506.03 CONSTRUCTION

506.03.01 General

The plant, equipment, and tools required in the performance of the work must be of the design, capacity, and in condition to efficiently perform their respective functions of the work. Schedule and coordinate all operations involved in constructing the pavement so that regardless of the daily or seasonal variations in weather, temperature, and humidity under which the work is permitted to proceed, such work will result in a finished pavement conforming in all respects to specified requirements. Provide and have available at all times adequate equipment, tools, materials, and labor to achieve these results and failure to so provide will be cause for discontinuance or rejection of the work upon order of the City Engineer. Conform to applicable requirements of concrete construction in Section 701 (Concrete Structures).

506.03.02 Preparation of Concrete Mix

Before beginning any concrete work, the Contractor shall, at the City Engineer's request, have the concrete mix designed and submit the mix design for approval. The mix design shall be tested by a laboratory approved by the City Engineer by preparing trial batches from each of which 4 standard test cylinders shall be cast, cured and tested as specified for the job concrete. Certified copies of all laboratory reports, stating whether or not the items reported meet specifications, shall be sent directly to the City Engineer from the testing laboratory.

Portland Cement, fine aggregate, coarse aggregate in required separated sizes, water, air-entraining agents and other admixtures as required, shall be used in the concrete in such

proportions as may be determined to be necessary to produce a concrete of suitable workability, plasticity and entrained-air content and of such strength as the conditions to be met may require. The proportions may be changed by the Design Engineer from time to time during the progress of the work, but they shall at no time be such that test cylinders of the resultant concrete, made in accordance with the applicable provisions of AASHTO T-23 and tested as set forth in OSHD TM-719, will show compressive strengths of less than 4,000 pounds per square inch at an age of 28 days.

Changes in proportions, and particularly in the proportion of cement, may be made not only for the purpose of causing the concrete to meet specified 28-day requirements but also to produce concrete of high early strength when concrete of that kind is required. The maximum amount of cement to be used shall be 750 pounds per cubic yard of concrete.

The proportions of water to be used shall be determined by the Design Engineer, it being the intent of the specification to have the water-cement ratio held as low as is consistent with the production of a workable, uniform and dense concrete. The maximum water-cement ratio shall be six gallons of water per 94 pounds of cement.

Entrained air in the concrete shall be as directed by the Design Engineer and normally will be from four to 6% by volume. The entrained air shall be obtained by use of air-entraining cement, by air-entraining additives or admixtures, or by combinations thereof as may become necessary and as the City Engineer may approve.

506.03.03 Hauling

Hauling of Portland Cement concrete mixed at a central plant or in transit will conform to the provisions of Section 701 (Concrete Structures).

506.03.04 Forms

Conform to the applicable requirements of Forms in Section 701 (Concrete Structures).

506.03.05 Handling and Placing

Conform to requirements for Handling and Placing in Section 701 (Concrete Structures).

During the placing of concrete, making provision for the construction of joints and the placing of dowels, tie bars, and other devices as shown. The Contractor is referred to Division 7 (Concrete Structures Construction Standards).

506.03.06 Preparation of Roadway

Before paving operations are commenced, the base constructed under the Contract and on which the pavement is to be constructed and shall be in or brought to the completed and finished condition prescribed under the applicable specification for its construction. Old base and foundations constructed under other contracts shall be brought by the Contractor to an acceptable condition as prescribed in these specifications.

In addition to the base under the pavement, an area of sufficient width alongside the pavement base which will support the paving equipment shall be brought to proper grade and compacted so as to support the equipment at proper grade and cross section. The base for the pavement shall be maintained and firm and true to established grade and cross section until the concrete is placed thereon.

Manholes, inlets, and other such structures shall have been completed, adjusted, cured, and otherwise prepared, as applicable, and made clean and ready to have concrete placed in contact therewith. Manhole frames and other independent metal structures in the pavement area shall be painted with suitable asphalt material.

The conditioned base shall be in a compacted and smooth condition when the concrete is placed thereon, and shall be moist. Watering of the base shall be thorough and uniform.

The City Engineer shall be permitted to place plates on prepared base and to reference them for later determination of thickness of concrete, and the Contractor shall exercise care to preserve such plates from displacement.

506.03.07 Weather Limitations

Except with written permission from the City Engineer, construction of Portland Cement concrete pavement shall not be in progress or continued when a descending air temperature in the shade and away from artificial heat reaches 35°F. Unless otherwise permitted, the temperature of the mix shall be not less than 50°F nor more than 80°F at the time of placing. Material containing frost or lumps of hardened material shall not be used.

Concreting operations shall be discontinued upon order due to insufficient natural light, unless an adequate and approved artificial lighting system is provided and operated.

When concrete is being placed during cold weather and the air temperature may be expected to drop below 35°F, a sufficient supply of straw, hay, grass, or other suitable blanketing material shall be provided along the work. Any time the air temperature may be expected to reach the freezing point during the day or night, the material so provided shall be spread over the pavement to a sufficient depth to prevent freezing of the concrete. If required by the City Engineer, concrete laid less than 24 hours shall also be covered by approved canvas or similar enclosures and devices capable of protecting the concrete from freezing. Any concrete injured by frost action shall be removed and replaced at the Contractor's expense.

The Contractor shall have available at all times materials for the protection of the edges and surface of the unhardened concrete from the effects of rain or other precipitation. Protective material may consist of sheets of burlap, paper or plastic film. It will be the Contractor's responsibility to protect the pavement from damage, and failure to properly protect unhardened concrete may constitute cause for the removal and replacement of defective pavement at the Contractor's expense.

506.03.08 Slip Form Paving

Place the concrete uniformly in final position by the slip form method in 1 complete pass in such a manner that a minimum of finishing will be necessary to provide a dense and homogeneous pavement in conformance to true grade and cross section. The machine shall vibrate the concrete for the full width and depth of the pavement being placed. Such vibration shall be accomplished with vibrating tubes or arms working in the concrete. The sliding forms shall be rigidly held together to prevent spreading of the forms. Use forms of sufficient length so that no appreciable slumping of the concrete will occur.

Operate the slip form paver with as nearly continuous forward movement as possible and coordinate all operations of mixing, delivery, and spreading concrete to provide uniform progress. Stopping and starting the paving machine shall be held to an absolute minimum. If, for any reason, it is necessary to stop the forward motion of the paver, stop the vibratory and tamping elements immediately. Apply no tractive force to the machine, except that which is controlled from the machine. The Contractor shall stop their operation immediately if the finished work is not of specified quality. Deficient areas shall be repaired before the concrete starts to set.

Ensure that supports of the slip form paver and other equipment which ride on previously placed pavement are offset over that pavement sufficiently to prevent breakage of the edge thereof and provide such supports with suitable protective means to avoid marring or chipping of the previously placed pavement.

Hand-spreading and distributing shall be with shovels, not rakes, and the concrete shall not be fouled with foreign matter, nor shall joint devices be disturbed during such operations. The Contractor shall furnish hand operated mechanical vibrators of a type and design approved by the City Engineer. These vibrators shall be used in the consolidation of the concrete pavement within at least 6 feet on each side of construction and expansion joints and such other areas as the City Engineer may direct.

During the placing of concrete, provision shall be made for the construction of joints and the placing of dowels, tie bars and other devices as called for by the plans or as directed by the City Engineer.

Concrete that is not in place within 45 minutes after being mixed (or 1 hour if mixed at a central plant or in transit) shall be subject to rejection and wasting at the direction of the City Engineer. Concrete which has begun to harden or take an initial set prior to placement, or which has been retempered with water will be rejected and shall be wasted by the Contractor in an approved manner and at their own expense.

506.03.09 Tamping and Screeding

Compact the concrete pavement by means of vibrating screeds, mechanical tampers, tamping templates, and such other implements as approved. A vibratory screed or an automatic screeding and tamping machine may be substituted for a tamping template, subject to approval. Operate the equipment in such a manner that a satisfactory compaction of the concrete is produced and the surface of the pavement is uniform, true to grade and cross section.

Immediately after placing concrete upon the subgrade and before initial set has occurred, strike off the concrete and tamp by means of a tamping template, used at right angles to the centerline of the street, until the concrete is thoroughly consolidated to specified grade and crown section and sufficient mortar is brought to the surface for finishing purposes. If the design or location of the base is such as to preclude the possibility of tamping as previously described, such as a variable crown section, curb being constructed monolithic with base, in alleys, or where the grade exceeds 10%; employ other approved methods to obtain the prescribed results.

506.03.10 Finishing

After the concrete is placed and compacted, strike it true to line, grade, and cross section as shown and float to a smooth, even texture with an approved long handled wood float having a troweling or smoothing surface from 6 to 12 inches wide, or other approved floating device.

Following the float finish and at the proper set, broom finish the surface. Draw the broom transversely across the pavement with not more than 1 stroke per width of broom. Fill any areas of minor honeycomb or other minor defect in composition of the concrete along the exposed edges with a stiff mortar or cement and fine aggregate applied to the moistened concrete in a workmanlike manner. Areas showing serious defects in composition of the concrete shall be cause for removal of affected pavement and replacement with pavement of specified quality for the full width of strip between longitudinal joints or edges and for a length not less than 10 feet.

Tool the free edges of new pavement and joints with previously placed Portland Cement concrete with an approved edging tool to remove laitance and mortar resulting form finishing operations and to provide a clean rounded edge to the new pavement. Tooling shall not form ridges on the surface of the concrete. Perform tooling of edges at transverse joints and longitudinal joints are directed.

506.03.11 Joints

Conform to applicable requirements of Section 701 (Concrete Structures) and Special Conditions.

506.03.12 Tolerances

At the conclusion of the finishing operation the surface of the pavement shall not vary from a true surface, when tested with a 12-foot testing straight-edge, more than 0.02 of a foot in 12 feet. The finished surface shall not vary more than 0.03 foot from the drawing elevations at any point.

If the surface smoothness of the pavement after curing is found to exceed the tolerance permitted, grind the high spots until they meet the tolerance. The practicable extend of grinding shall not exceed 0.5 inch, nor create spalling of aggregate nor create deficiencies in pavement thickness. Low spots, if in hardened concrete may be filled with an approved epoxy grout

provided such filling is performed in a neat, workmanlike manner and blend inconspicuously with adjoining concrete. All grinding to be at the sole expense of the Contractor.

506.03.13 Curing

A. Curing of Concrete

Immediately after the final floating, surface finishing, and edging has been completed and while the concrete surface is still moist, cover the entire exposed concrete and cure in accordance with one of the following provisions as specified.

1. Apply membrane-forming compound of the white pigmented type uniformly to damp concrete by pressure-spray methods at a rate which will form an impervious membranes when tested in accordance with AASHTO T 155.
2. Apply white polyethylene film, waterproof paper or burlap polyethylene sheets to damp concrete as soon as it can be placed without marring the surface. Place in intimate contact with the surface, extend over and beyond the sides or edges of the slabs or forms and weight as approved to hold the covering in position as a moisture proof covering.
3. Apply burlap cloth to damp concrete as soon as it can be placed without marring the surface. Saturate the cloth with water and keep fully wetted during the curing period.

B. Protection of Concrete

Erect and maintain suitable barriers to protect the concrete from traffic or other detrimental trespass until the pavement is opened to traffic. If necessary, maintain watchmen to ensure that barriers remain effective.

Wherever it is necessary that traffic including Contractor's vehicles and equipment be carried from one side of the pavement to the other, construct and maintain suitable bridges over the pavement.

Prior to allowing equipment or traffic on the new surface, the concrete must have attained the specified compressive strength and shall be free from scarring, abrasion, stones, loose mortar, and other matter apt to be deleterious to the concrete surface. Operate all equipment without damage to the new concrete.

Repair or replace any part of the pavement, as directed, which has been damaged by traffic or from any other cause, prior to its official acceptance, at the sole expense of the Contractor.

507 CURBS, GUTTERS, DRIVEWAYS, AND SIDEWALKS

507.01 DESCRIPTION

This section covers work necessary for the construction of curbs, gutters, combination curb and gutter, combination of curb, gutter and sidewalk, islands, traffic separators, driveways, sidewalks, and pathways hereinafter referred to collectively as structures.

The respective structure names are specific in their use and refer specifically to those names as shown.

507.02 MATERIALS

507.02.01 General

Materials shall conform to requirements of Section 205 (Materials—Types and Use) and to additional requirements contained herein.

507.02.02 Portland Cement Concrete for Extrusions

Grade the combined aggregates within the following limits.

Sieve Sizes	Total Passing Percent by Weight
½"	100
⅜"	75-100
No. 4	50-75
No. 16	20-40
No. 30	12-23
No. 50	5-15
No. 100	0-5

507.02.03 Portland Cement Concrete

Portland Cement concrete shall conform to Subsection 205.02.02 (Portland Cement Concrete) except that extruded curbs and/or gutters shall have a maximum slump of 2".

507.02.04 Aggregate

Aggregate materials for base, foundation, courses, leveling courses, or bedding shall conform to 1"-0" gradation in Section 503 (Aggregate Bases).

507.03 CONSTRUCTION

507.03.01 Preparation of Base

A. Earthwork

When roadway earthwork is called for in connection with other items of work under the same contract which includes structure construction under this section, all excavation, backfilling, and berm construction for the structures and in the vicinities thereof as required or as shown shall conform to applicable requirements of Section 204 (Excavation, Embankment, Bedding, and Backfill).

B. Aggregate Foundation or Bedding

Construct sidewalk structures on aggregate foundation course or bedding of selected granular material as specified.

When structures are to be constructed on areas where approved aggregate material is already in place, such materials may be salvaged and reused as bedding.

Foundation courses or beddings involving the furnishing of new materials shall be constructed in conformance to the applicable requirements of Section 503 (Aggregate Bases).

C. Base for Portland Cement Concrete

All bases upon which new cement concrete structures are to be constructed shall be firm and free of all deleterious matter. Dampen thoroughly surfaces upon which new cement concrete is to be placed. No payment will be made for water and the work of placing base materials. The cost of preparing bases shall be considered as incidental to the construction of structures.

When new concrete is placed by the mechanical extrusion method, vertical dowel fastening to underlying concrete or asphalt may be eliminated and the bond between new

concrete and underlying concrete or asphalt provided with epoxy cement applied in conformance with the manufacturer's recommendations as approved. Spread epoxy at a rate which will provide a thorough coating to the surface with all voids and depressions filled. Place new structure on the epoxy cement within 15 minutes after spreading.

507.03.02 Forms

A. Forms

Conform to requirements for forms in Section 701 (Concrete Structures).

507.03.03 Equipment

Plant and equipment requirements, as described in Section 505 (Asphalt Concrete Pavement) and Section 506 (Portland Cement Concrete Pavement), may be modified as approved, when circumstances warrant. For asphalt sidewalks or islands, spread asphalt concrete by small or special pavers, by spreader boxes, or by blade graders. Compact with small, self-propelled rollers, vibratory compactors, or mechanical tampers. Spread or compact the mixture by hand methods only when approved.

The machine for extruding cement concrete curb or asphalt concrete curb shall be of the self-propelled type equipped with a material hopper, distributing screw, and adjustable curb forming devices capable of placing and compacting cement concrete or asphalt concrete to the lines, grades, and cross section as shown, in an even homogeneous manner. Cement concrete curb shall be free of honeycomb and cracks.

Set top of curb grade by an offset guide line using the survey marks established by the Design Engineer. The forming tube portion of the extrusion machine shall be readily adjustable vertically during the forward motion of the machine to provide, when necessary, a variable height of curb conforming to the predetermined curb grade. A grade line gauge or pointer shall be attached to the machine in such manner that a continual comparison can be made between the curb being placed and established curb grade as indicated by the offset guide line.

In lieu of the above method for maintaining the curb grade, the extrusion machine may be operated on approved rails or forms set at the proper relative grade.

507.03.04 Placing Material

No asphalt or concrete shall be placed until the surface and forms, where used, have been inspected and approved.

A. Portland Cement Concrete

Construct Portland Cement concrete structures between specified forms or by an mechanical extrusion method, as the Contractor may elect. If forms are used, maintain a 2- to 4-inch slump, and thoroughly compact and strike off. If the structures are constructed by a mechanical extrusion method, maintain a maximum slump of 2 inches. Feed cement concrete into the extruding machine at a uniform rate and operate the machine under sufficient restraint in a forward motion to produce a well-compacted mass of concrete.

507.03.05 Finishing

A. General

Construct all structures within ¼ inch of true line and within ¼ inch of established surface grade, cross section and slope, and within ¼ inch of specified thickness, and all finished surfaces shall be free from humps, sags, or other irregularities. When a straightedge 10 feet long is laid on a finished surface, the surface shall not vary more than 0.02 feet from edge of the straightedge.

Where Portland Cement concrete sidewalks or pathways are to be placed around or adjacent to manholes, pipe inlets, or other miscellaneous structures, form around the miscellaneous structure and allow a minimum of 18" of clearance, after the sidewalk is poured and cured, adjust miscellaneous structures to grade and finish placing the sidewalk or pathway.

B. Portland Cement Concrete

1. Sidewalks and Other Structures

Finish surface of concrete to grade and cross section with a bull float, trowel smooth, score if required, then finish with a broom. Use floats of not less than 10 feet in length for straight grade sections and not less than 5 inches in width. Finish concrete adjacent to expansion joints with an edger tool. Light brooming shall be transverse to the line of traffic, and if water is necessary, it shall be lightly applied to the surface immediately in advance of brooming.

The surface of concrete sidewalks shall be marked into rectangles with a scoring tool which will leave the edges rounded. Scoring and dimensions shall be as shown on the appropriate standard drawing or as directed. Sidewalks shall have a slope of ¼ inch per foot from the top of curb to the back of walk unless otherwise shown.

Where a utility pole exists within a sidewalk section, a 1-inch gap must be maintained between the utility pole and the finished edge of any sidewalk section. This 1-inch gap shall be filled with ¾”-0 crushed aggregate to ½” below the finished grade of the sidewalk panel.

2. Curbs

Remove forms after the concrete has taken initial set and while the concrete is still green. Minor defects shall be repaired with mortar containing 1 part Portland Cement and 2 parts sand. Plastering will not be permitted on the faces and exposed surfaces. Honeycombed and other structurally defective concrete shall be removed and replaced at no expense to City. While the concrete is still green, finish exposed surfaces as required to provide a uniform texture and smooth surface.

When constructing precast concrete curbs, the proportions of sand, gravel and cement, the type of forms used, and the method of compacting the concrete in the forms shall all be such that as dense, smooth and uniform a surface as is practicable for a concrete masonry unit will be obtained on the finished curb units. The faces that are to be exposed shall be free from chips, cracks, air holes, honeycomb or other imperfections.

Furnish and install a minimum of two 3-inch PVC Sch. 40 pipe curb drains to serve each lot. Blockouts shall be of adequate size to accommodate a 3-inch PVC drain pipe. PVC pipe shall conform to ASTM D 2241. Curb drains will be considered incidental work for which no separate payment will be made.

507.03.06 Curing Portland Cement Concrete

After the concrete has been placed and finished in curb structures, as specified, it shall be cured by application of a white pigmented liquid membrane-forming compound applied uniformly to the damp concrete by pressure spray methods, or by keeping the concrete protected and moist for at least 72 hours. The concrete structure shall be kept from contact and strain for at least 7 days.

Curing of concrete in all other structures shall conform to the requirements for Curing in Section 506 (Portland Cement Concrete Pavement).

507.03.07 Joints in Portland Cement Concrete

A. Contraction Joints in Walks and Incidental Surfacing

Form transverse contraction joints of the weakened plane or dummy type in the exposed surfaces of cement concrete walks and incidental surfacings at such locations as are required to confine the contraction joint spacing to a maximum of 15 feet. The joints shall be formed to a depth of ⅓ of the thickness of concrete and to a width of about ⅛ inch. Joint edges shall be tooled.

B. Contraction Joints in Curbs

Place contraction joints in curbs at intervals not exceeding 15 feet. Contraction joints shall be of the open joint type and shall be provided by inserting a thin, oiled steel sheet vertically in the fresh concrete to force coarse aggregate away from the joint. The steel sheet shall be inserted half the depth of the curb. After initial set has occurred in the concrete and prior to removing the front curb form, the steel sheet shall be removed with a sawing motion. Finish top of curb with a steel trowel and finish edges with a steel edging tool. Contraction and expansion joints of curbs should coincide with joints in sidewalks and streets.

C. Requirements Near Existing Structures

Cut back existing curbs, walks, driveways, and other such structures to permit the new construction and where the new structures are to be constructed against or within 4 inches of the end, edge or side of other structures, the new construction shall include the construction of approved connections therewith, using the same kind of concrete as is used in the new construction. Make the joint between the old and new material with a saw cut.

507.03.08 Dowels, Tie Bars, Reinforcing

Provide metal reinforcing bars and wire fabric reinforcement when and as shown. When shown, provide and place dowels with "slip sleeves" as load transfer mediums. Provide and place dowels, but without "slip sleeves," as fastenings or ties between new concrete and existing underlying concrete when shown. Provide tie bars when shown. Place reinforcing, dowels, and tie bars in conformance to the applicable requirements in Section 702 (Reinforcement).

508 GEOTEXTILE FABRICS

508.01 GENERAL

This work consists of furnishing and placing geotextile fabrics in on subgrades (0 subgrade geotextile) and beneath an asphalt overlay (pavement overlay geotextile) as shown on the plans or as directed by the City Engineer.

508.02 MATERIALS

Geotextile materials shall conform to Subsection 205.02.14 (Controlled Density Fill).

508.03 CONSTRUCTION

508.03.01 General

General requirements for placement of geotextile shall be in accordance with Subsection 205.03.01 (Description).

508.03.02 Subgrade Geotextile

For roadbed subgrade separation, prepare the subgrade according to Section 501 (Subgrade).

Correct geotextile failures, as evidenced by soil pumping or roadbed distortion, by removing any covering material in the affected area and placing a geotextile patch on the exposed geotextile. Cover the patch with the specified cover material and compact before proceeding.

508.03.03 Pavement Overlay Geotextile

A. General

Place geotextile and pavement overlay in 4 basic steps:

1. Surface preparation
2. Sealant application
3. Geotextile placement
4. Overlay placement

B. Weather Limitations

Do not place sealant and geotextile unless the weather limitations of 00745.40 are met, as appropriate, except the minimum air temperature shall be 50ºF for paving grade asphalt sealant placement and 60ºF for asphalt emulsion sealant placement.

C. Surface Preparation

Prepare the pavement surface on which the sealant is to be placed according to specifications and the following.

1. Clean and fill cracks exceeding ⅛ inch width with a bituminous crack filler from the Division's Qualified Product List.
2. Repair minor irregularities or depressions as directed.
3. Allow crack filling material to cure before placing geotextile.
4. Where the pavement is severely cracked, rutted, deformed, or otherwise distressed, place a leveling course as directed instead of extensive surface preparation.

D. Sealant Application

Use a normal paving grade asphalt. A cationic or anionic emulsion may be used as approved. Do not use cutbacks or emulsions which contain solvents.

Uniformly spray the asphalt sealant at normal application temperature by means of a pressure distributor on the prepared dry pavement surface. Apply at the normal rate of 0.20 to 0.30 gallon per square yard or as recommended by the geotextile manufacturer as directed.

If using emulsions, increase the application rate 50% or as directed. Some underlying surfaces may require a higher application rate. Within street intersections, on steep grades, or in other zones where vehicle speed changes are commonplace, reduce the normal application rate by 20% or as directed.

The target width of sealant application shall be geotextile width plus 6 inches. Apply the sealant only as far in advance of geotextile installation as appropriate to insure a tacky surface at the time of geotextile placement. Place geotextile the same day as the sealant. Do not allow traffic on the sealant. Clean excess asphalt from the road surface.

509 COLD PLANE PAVEMENT REMOVAL

509.01 GENERAL

This work shall consist of preparing a foundation for placement of new surfacing by removal of existing surfacing to the depth, width, and cross section shown on the plans.

509.02 WORKMANSHIP

509.02.01 Equipment

The existing surfacing shall be removed with a self-propelled planning machine or grinder. The equipment shall be capable of accurately establishing profile grades within a tolerance of 0.02 foot by reference from either the existing pavement or from independent grade control and shall have a positive means for controlling cross slope elevations. The equipment shall incorporate a totally enclosed cutting drum with replaceable cutting teeth and shall have an effective means for removing excess material from the surface and for preventing dust from escaping into the air. The use of a heating device to soften the pavement will not be permitted.

509.02.02 Pavement Removal

The existing pavement shall be removed to the depth, width, grade, and cross section shown on the plans or as directed by the City Engineer to provide a surface profile true to specified grade and transverse slope.

Except where samples are taken to establish a job mix formula, the existing surfacing shall not be removed more than 5 days prior to construction of the new surfacing, unless otherwise approved by the City Engineer.

Wherever samples are obtained from existing surfacing more than 5 days prior to construction of the new surfacing, the Contractor shall patch the samples areas with asphalt concrete at their own expense.

509.02.03 Surface Tolerance

The new surface resulting from the pavement removal will be tested by the City Engineer for trueness to specified grade and transverse slope at selected locations. Testing will be with a 10-foot straightedge. The variation of the surface from the testing edge of the straightedge between any 2 contact points shall not exceed 0.02 foot.

509.02.04 Disposal of Materials

Materials removed under this specification which are not recycled and used on the project shall become the property of the Contractor at the point of removal and shall be disposed of off the limits of the project in a manner satisfactory to the City Engineer.

The Contractor is encouraged to salvage any removed cold planed materials which are not recycled and used on the project for use on future projects.

510 VACANT

511 ADJUSTMENT OF EXISTING STRUCTURES TO GRADE

511.01 DESCRIPTION

This section covers the work necessary for adjusting tops of existing structures (e.g., manholes, sumps, catch basins, inlets, valve boxes, meter boxes, monument boxes, and similar structures) to required elevation and/or horizontal alignment complete.

511.02 MATERIALS

511.02.01 General

Materials used in adjustment of existing structures may be materials salvaged from the existing installation and brought to a condition approved for reuse by the City Engineer.

511.03 CONSTRUCTION

511.03.01 Excavation and Backfill

Excavation shall be unclassified and shall include whatever materials are encountered to the depths as shown.

Saw cut around structures to be adjusted when pavement work has been completed. Do not use a jack hammer for pavement cutting. Replace pavement to previous density and grade.

Backfill shall be done in accordance with the applicable requirements of Section 204 (Excavation, Embankment, Bedding, and Backfill).

511.03.02 Salvage of Frames, Covers, and Grates

Metal frames, covers, grates, and fittings may be salvaged from structures to be adjusted or abandoned, and if of suitable size and condition, as determined by the City Engineer, may be reused in the work.

Salvaged components to be reused shall be cleaned of foreign material by solvents, sand blasting, or other methods that will not harm the component but will restore it to a nearly new condition. Salvaged frames, covers, and grates not reused on the project shall become the property of the City.

511.03.03 Raising Tops of Masonry Structures

After existing frames, covers, and grates have been removed, expose the top surface on which new mortar or concrete is to be placed and chip away at least ½-inch to expose firm concrete. The new surface shall be cleaned by brushing and shall be moistened with water at the time of placing new concrete. New concrete shall then be placed to required grade and cured at least 3 days, after which the frame shall be seated in fresh mortar and brought to the proper grade.

Masonry of bricks or concrete blocks shall be raised with new bricks, blocks, mortar, or combinations thereof or with Portland Cement concrete, as conditions may require. Concrete boxes may be lifted and placed on precast concrete box extensions, on new brick, or on cast-in-place concrete as may be suitable.

Mortar for building up existing masonry shall not be placed to a depth exceeding 1 inch. Concrete shall not be placed to a depth of less than 4 inches. To conform to these requirements, existing shells or walls of structures to be raised shall be cut down as necessary to provide space for the new construction.

Fabricated metal rings or plates may be furnished and used in adjustment work, provided the metal and its fabrication design is at least equal to specified characteristics of strength and support required of the covers or grates to be placed, that uniform bearing of bearing surfaces is assured, and positive provision is afforded against displacement when in service.

511.03.04 Lowering Tops of Masonry Structures

Where the top of an existing masonry structure is to be lowered, the masonry portion of the structure shall be exposed to required depth, cut off, or removed to an elevation below that established for the bottom of metal frame or cover which is to be reset on masonry and shall then be built up with mortar, concrete, brick, or concrete blocks, or with metal rings or plates to required elevation and top design. Joining of new material to old, minimum thickness of new mortar and concrete, limitations, curing, and other details shall be as specified in Section 701 (Concrete Structures).

511.03.05 Adjusting Metal Structures

Metal inlets, valve boxes, meter boxes, monument boxes, or other like structures shall be raised or lowered to grade normally by resetting the entire structure on firm foundation. In the case of raising the structure to a point where it would not enclose or protect its contents, add metal extensions of like design below the original structure. Contractor may replace the structure with a new structure of adequate design as approved and at the Contractor's sole expense. Salvaged structures not reused on the project shall become the property of the City. Metal structures shall conform to applicable Sections of Division 3 (Sanitary Sewer Construction Standards) and Division 4 (Water Construction Standards).

END OF DIVISION

DIVISION 6—STORMWATER CONSTRUCTION STANDARDS

TABLE OF CONTENTS

601 PIPE AND FITTINGS (STORM DRAINS) 1

601.01 DESCRIPTION 1

601.02 MATERIALS 1

601.02.01 General 1

601.02.02 Concrete Pipe 1

A. Nonreinforced Concrete Pipe 1

B. Reinforced Concrete Pipe 1

C. Perforated Concrete Pipe 2

601.02.03 Ductile-Iron Pipe 2

601.02.04 PVC Nonpressure Pipe and Perforated PVC Pipe 2

A. Solid Wall 2

B. Perforated Wall 2

601.02.05 High Density Polyethylene Pipe (HDPE) 2

601.02.06 Corrugated Aluminum Alloy Pipe 2

601.02.07 Flared-end Sections 2

601.02.08 Bituminous Coating 3

601.02.09 Paved Inverts 3

601.02.10 Jointing Materials 3

A. Concrete Pipe 3

B. Cast-Iron and Ductile-Iron Pipe 3

C. PVC Pipe 3

D. HDPE Pipe 3

601.02.11 Proof Tests 3

A. General 3

B. Concrete Pipe 4

C. Cast-Iron Pipe and Ductile-Iron Pipe 4

D. PVC Pipe 4

E. HDPE Pipe 4

601.02.12 Fittings 5

A. PVC Pipe 5

601.02.13 Couplings, Bands and Fittings for Corrugated Metal Pipe 5

601.02.14 Rail Lines Crossing Storm Sewers 5

601.03 CONSTRUCTION 5

601.03.01 Excavation and Backfill 5

601.03.02 Line and Grade for Gravity Storm Sewers 5

601.03.03 Pipe Distribution and Handling 5

601.03.04 Pipe Laying and Jointing of Pipe and Fittings 5
A. General 5
B. Concrete Pipe 6
C. Corrugated Metal Pipe 6
601.03.05 Perforated Pipe Underdrains 6
A. Trench Excavation and Backfill 6
B. Pipe Bedding 6
C. Backfill at the Pipe Zone 6
D. Backfill Above the Pipe Zone 7
E. Laying and Jointing Perforated Pipe 7
601.03.06 Flared-end Sections 7
601.03.07 Pipe Coupling Adapters 7
601.03.08 Concrete Closure Collars 7
601.03.09 Culverts 7
601.03.10 Testing Storm Drains 7
A. General 7
B. Cleaning Prior to Testing and Acceptance 8
C. Repairs 8
601.03.11 Deflection Test for PVC, Ribbed PVC, and HDPE Pipe 8
601.03.12 Television Inspection of Storm Drains 8
601.03.13 Subsequent Failure 8

602 MANHOLES, INLETS AND CONCRETE STRUCTURES 9

602.01 DESCRIPTION 9
602.02 MATERIALS 9
602.02.01 Base Rock 9
602.02.02 Forms 9
602.02.03 Concrete and Reinforced Steel 9
602.02.04 Cement Mortar 9
602.02.05 Manholes 9
A. Standard Precast Manhole Sections 9
B. Precast Concrete Bases 9
C. Poured in Place Manhole Bases 9
D. Manhole Grade Rings 9
E. Jointing Materials 10
602.02.06 Pipe and Fittings 10
602.02.07 Precast Inlets and Catch Basins 10
602.02.08 Manhole and Cleanout Frames and Covers 10
A. General 10
B. Materials 10
C. Cap Screws 10
602.02.09 Standard Frames and Grates for Inlets and Catch Basins 10
602.02.10 Steps for Precast Manholes 11
602.02.11 Storm Sumps 11

602.03 CONSTRUCTION 11
602.03.01 General 11
A. Excavation and Backfill 11
B. Base Rock 11
C. Foundation Stabilization 11
602.03.02 Manholes 11
602.03.03 Pipe Stubouts From Manholes 11
602.03.04 Manhole Grade Rings 12
602.03.05 Adjustment of Manholes to Grade 12
602.03.06 Vacuum Testing 12
602.03.07 Concrete Encasement for Storm Drainage Pipe 12
602.03.08 Special Concrete Structures 12
602.03.09 Placing Precast Units 12
602.03.10 Installation of Inlets and Catch Basins 12
602.03.11 Inlet and Catch Basin Extensions 13
602.03.12 Cleaning 13
602.03.13 Steps for Precast Manholes 13
602.03.14 Storm Sumps (Drywells) 13

603 WORK ON EXISTING STORM DRAINAGE STRUCTURES 13

603.01 DESCRIPTION 13
603.02 MATERIALS 13
603.03 CONSTRUCTION 13
603.03.01 Excavation and Backfill 13
603.03.02 Manholes Over Existing Storm Sewers 13
603.03.03 Connection to Existing Manholes, Inlets, and Concrete Structures 14
603.03.04 Removal of Existing Pipes, Manholes, and Appurtenances 14
603.03.05 Filling Abandoned Manholes, Inlets, and Catch Basins 14
603.03.06 Existing Manhole Frames and Covers 14
603.03.07 Permanent Plugs 14
603.03.08 Adjust Existing Structures to Grade 14
603.03.09 Reconstruct Manhole Base 15
603.03.10 Connect Pipe to Existing Inlets 15
603.03.11 Storm Sump Protection 15

601 PIPE AND FITTINGS (STORM DRAINS)

601.01 DESCRIPTION

This section covers the following work: (1) gravity and storm sewer pipe, (2) culverts, (3) perforated pipe underdrains, and (4) fittings.

601.02 MATERIALS

601.02.01 General

Use all storm sewer pipe and fittings of the size, strength, material and joint type specified on the drawings and/or the proposal. Use jointing material as hereinafter specified for each pipe material. Each piece of pipe shall be clearly identified as to strength, class and date of manufacture. The manufacturer or fabricator shall furnish appropriate certification, based on manufacturer's routine quality control tests, that the materials in the pipe and fittings meet the requirements specified herein. Strength, permeability, hydrostatic tests and pipe joints will be used as the basis of acceptance as described under Subsection 601.02.11 (Proof Tests). Minimum length of pipe shall be 3.5 feet.

It is not intended that materials listed herein are to be considered equal or generally inter changeable for all applications. The Design Engineer shall determine the materials suitable for the project and so specify.

Ribbed PVC pipe conforming to ASTM F 794 is the preferred pipe for storm drains of 24” or less in diameter and should be specified for most applications.

Use pipe and fittings of one type of material throughout; no interchanging of pipe and fittings will be allowed. All pipes shall be rubber gasketed.

Do not coat pipes for storm sewers internally or externally with any substance of any type in an attempt to improve its performance when air tested.

601.02.02 Concrete Pipe

A. Nonreinforced Concrete Pipe

Nonreinforced concrete pipe shall conform to ASTM C 14, Class 3, as shown or specified and the following additional requirements.

1. Cement shall be Type II conforming to ASTM C 150.
2. The minimum Portland Cement content shall be 564 pounds per cubic yard.
3. The water/cement ratio shall not exceed 0.49.
4. The Contractor shall provide the City Engineer with a Certificate of Compliance from the pipe manufacturer that the pipe and concrete mix conform in all respects to these specifications and other nonconflicting requirements of the referenced ASTM Specifications.

B. Reinforced Concrete Pipe

Reinforced concrete pipe shall conform to ASTM C 76, Class IV, as shown or specified with Wall B design and the following additional requirements.

1. Cement shall be Type II conforming to ASTM C 150.
2. The minimum Portland Cement content shall be 564 pounds per cubic yard.
3. The water/cement ratio shall not exceed 0.49.

4. Elliptical reinforcing is not permitted.
5. The area of the outer circular reinforcing cage shall not be less than 75% by the inner cage.
6. The Contractor shall provide the City Engineer with a Certificate of Compliance from the pipe manufacturer that the pipe and concrete mix conform in all respects to these specifications and other nonconflicting requirements of the referenced ASTM Specifications.

C. Perforated Concrete Pipe

Perforated concrete pipe and fittings shall conform to ASTM C 444 and applicable requirements of ASTM C14 and C76 as modified herein, class and end type as specified.

601.02.03 Ductile-Iron Pipe

Ductile-iron pipe centrifugally cast of 60-42-10 iron shall conform to ANSI A21.51 Class 150 or AWWA C151, with push-on joint or mechanical joints as specified, conforming to ANSI Specification A21.11/AWWA C111. Ductile-iron pipe shall be lined with cement mortar and seal coated in accordance with ANSI Standard A21.4/AWWA C104.

When specified, tube type polyethylene encasement shall conform to ANSI A21.5/AWWA C105.

601.02.04 PVC Nonpressure Pipe and Perforated PVC Pipe

A. Solid Wall

PVC sewer pipe shall conform to ASTM D 3034 SDR 35 or F 794.

B. Perforated Wall

Perforated PVC pipe shall conform to ASTM D 1785, Schedule 40. The perforations shall consist of 2 rows of 2-inch slots. The slots shall be transverse to the axis of the pipe. 2 rows of slots shall be 120 degrees on centers. Slot size shall be 0.4 inches.

601.02.05 High Density Polyethylene Pipe (HDPE)

Smooth interior, corrugated exterior HDPE sewer pipe and associated HDPE fittings shall conform to AASHTO M294, AASHTO 252, ASTM 405, or ASTM 667.

601.02.06 Corrugated Aluminum Alloy Pipe

Corrugated aluminum alloy pipe shall be used only for specialized applications as approved by the City Engineer. Other materials must be demonstrated to be impractical or unavailable.

Corrugated aluminum alloy pipe and coupling bands of the gauges and types as shown or specified shall conform to the material, fabrication, and inspection requirements of AASHTO M 196, Type I or Type II, and AASHTO M 197. Recorrugate the ends of Helical corrugated pipe to receive annular bands at each joint.

601.02.07 Flared-end Sections

Precast concrete flared-end sections shall conform to the requirements for reinforced concrete pipe herein specified. The area of steel reinforcement per linear foot of flared-end section shall be at least equal to the minimum steel requirements for circular reinforcement in circular pipe for the internal diameter of the circular portion of the flared-end section. Submit all details of construction to the City Engineer.

Use prefabricated aluminum flared-end sections conforming to AASHTO M 197.

601.02.08 Bituminous Coating

When specified, completely coat the inside and outside surfaces of corrugated pipe with bituminous material conforming to AASHTO M 190 Type A, with a minimum thickness of 0.05 inch at the crest of the corrugations.

601.02.09 Paved Inverts

When specified, bituminously coat the bottom half and pave the inside surface of the corrugated metal pipe for ¼ of its circumference with bituminous material conforming to AASHTO M 190 Type B to provide a flat invert centered in the bottom of the pipe. The pavement, except where the upper edges intersect the corrugations, shall have a minimum thickness of ⅛ inch above the crests of the corrugations. Suitably mark the outside of the pipe on both ends to clearly designate the centerline of the top of the pipe.

601.02.10 Jointing Materials

Only lubricants for jointing materials approved by the manufacturer shall be used.

Furnish in duplicate a certified statement from the manufacturer of the gaskets, setting forth the basic polymer used in the gaskets and results of the tests of the physical properties of the compound. Gaskets shall be shipped in containers with identification of the batch from which the gaskets were fabricated.

A. Concrete Pipe

Rubber gaskets for bell and spigot pipe shall conform to ASTM C 443. Use captive gasket in groove design for pipe 24-inch diameter and larger. Mortar for tongue and groove pipe shall conform to Section 205 (Materials—Types and Use).

B. Cast-Iron and Ductile-Iron Pipe

Rubber gaskets shall conform to ANSI A21.11/AWWA C111.

C. PVC Pipe

Rubber gaskets for PVC pipe shall conform to ASTM F 477.

D. HDPE Pipe

Rubber gaskets for HDPE pipe shall conform to ASTM F 477.

601.02.11 Proof Tests

A. General

The intent of this requirement is to pre-qualify a joint system, components of which meet the joint requirements, as to the water tightness capability of that joint system. This proof test shall be understood to apply to all storm drains, which are to be tested for water tightness prior to acceptance. Material and test equipment for proof testing shall be provided by the manufacturer. Joints shall meet the requirements of yard testing specified below. The pipe manufacturer shall submit results of the yard tests made, certified by a testing agency acceptable to the City Engineer. In general, each pipe material and joint assembly shall be subject to the following 3 proof tests at the discretion of the City Engineer:

1. Pipe in Straight Alignment

No less than 3 nor more than 5 pipes selected from stock by the City Engineer or the testing agency shall be assembled according to the manufacturer's installation instructions with the ends suitable plugged and restrained against internal pressure. The pipe shall be subjected to 13 PSI hydrostatic pressure for

10 minutes. Free movement of water through the pipe joint or pipe shall be grounds for rejection of the pipe.

2. Pipe in Maximum Deflected Position

A test section shall be deflected as described hereinafter for each pipe material. The pipe shall be subjected to 10 PSI hydrostatic pressure for 10 minutes. Free movement of water through the pipe joint or pipe wall shall be grounds for rejection of the pipe.

3. Joints Under Differential Load

The test section shall be supported on blocks or otherwise as described hereinafter for each pipe material. There shall be no visible leakage when the stressed joint is subjected to 10 PSI internal hydrostatic pressure for 10 minutes.

B. Concrete Pipe

For deflected position, create a position ½ inch wider than the fully assembled position, on one side of the outside perimeter of each joint.

For differential load test, assemble 3 pipes according to the manufacturer's instructions in straight alignment with the ends suitably plugged and restrained against internal hydrostatic pressure. The end pipes of the test section shall be supported on blocks or otherwise so that the center pipe is suspended freely between the adjacent pipe and bearing only the joints. The pipe section shall be filled with water and a load of 150 pounds per inch of pipe diameter, in addition to the weight of the pipe, shall be supplied over an arc of not less than 120 degrees along a longitudinal distance of 12 inches immediately adjacent to one of the joints. For pipe 24-inch and larger, the applied load shall be reduced by half of the weight of water in the suspended pipe.

C. Cast-Iron Pipe and Ductile-Iron Pipe

For deflected position, create a position ½ inch wider than the fully compressed section on one side of the outside perimeter.

For differential load, support so that 1 of the pipes is suspended freely between adjacent pipe, bearing only on the joints. Apply a force per the following table along a longitudinal distance of 12 inches, immediately adjacent to 1 of the joints.

PIPE SIZE	FORCE - POUNDS	PIPE SIZE	FORCE - POUNDS
4 inches	1,000	15 inches	3,700
6 inches	1,500	18 inches	4,400
8 inches	2,000	21 inches	5,000
10 inches	2,500	24 inches	5,500
12 inches	3,000	and over	----

D. PVC Pipe

PVC pipe joints shall be tested by and meet the requirement of ASTM C 3212 for gravity sewers and ASTM D 3139 for pressure sewers.

E. HDPE Pipe

HDPE pipe shall be tested and meet the requirements of ASTM D 3350 for polyethylene pipe.

601.02.12 Fittings

A. PVC Pipe

In connecting PVC pipe to manholes, use resilient connectors in conformance with ASTM C923.

601.02.13 Couplings, Bands and Fittings for Corrugated Metal Pipe

Use couplings, bands and fittings conforming to AASHTO M 196.

601.02.14 Rail Lines Crossing Storm Sewers

New construction and reconstruction of light rail and freight rail may require improvements to the storm drainage system at utility crossing locations. Existing pipes in the second half of their useful life within the rail zones must be replaced to current standards. Metallic or conductive pipe materials are not approved pipe materials at light rail crossings.

Pipes are to be centered under rail tracks to avoid joints located underneath rail lines. All new pipe installations shall identify practical future replacement options for the pipe under rail lines. All pipes shall be sized for full build-out and future flows. This sizing includes allowance for trenchless technologies. Where lining is anticipated, add pipe size to account for lining thickness.

601.03 CONSTRUCTION

601.03.01 Excavation and Backfill

Conform to the requirements of Section 204 (Excavation, Embankment, Bedding, and Backfill). All excavation shall be unclassified.

601.03.02 Line and Grade for Gravity Storm Sewers

Do not deviate from line or grade, as established by the Design Engineer, more than ½ inch for line and ¼ inch for grade, provided that such variation does not result in a level or reverse sloping invert. Measure for grade at the pipe invert, not at the top of the pipe, because of permissible variation in pipe wall thickness. Establish line and grade for pipe by the use of lasers or by transferring the cut from the offset stakes to batter boards at maximum intervals of 50 feet.

601.03.03 Pipe Distribution and Handling

Distribute material on the job no faster than it can be used to good advantage. Unload pipe only by means recommended by the pipe manufacturer. Do not unload pipe of any size by dropping to the ground. Do not distribute more than 1 week's supply of material in advance of laying, unless approved.

Pipe shall not be unloaded or stored in the public right-of-way or easement unless it has been certified and accepted by the City Engineer. Inspect all pipe and fittings prior to lowering into trench to ensure no cracked, broken, or otherwise defective materials are used. Clean ends of pipe thoroughly. Remove foreign matter ad dirt from inside of pipe and keep clean during and after laying.

Use proper implements, tools, and facilities for the safe and proper protection of the work. Lower pipe into the trench in such a manner as to avoid any physical damage to the pipe. Remove all damaged pipe from the job site. Do not drop or dump pipe into trenches.

601.03.04 Pipe Laying and Jointing of Pipe and Fittings

A. General

Proceed with pipe laying upgrade with spigot or tongue ends pointing in direction of flow. Place pipe in such a manner as to ensure a continuous and uniform bearing and support for the full length of the pipe between joints. Take care to properly align the pipe before

forced entirely home. Upon completion of pipe laying all pipe joints shall be in the "home" position, which is defined as the position where the least gap (if any) exists, when the pipe components that comprise the join are fitted together as tightly as the approved joint design will permit. Gaps at pipe joints shall not exceed that allowed by the manufacturer's recommendations. For curved sewers the normal gap will be the gap existing when the pipe joints are in the "home" position as described above, for the pipe in the specified deflected position. After installation, prevent movement from any cause including uplift or floating.

Take special care to prevent movement of the pipe after installation when laid within a movable trench shield.

When laying operations are not in progress, protect the open end of the pipe from entry of foreign material and block the pipe to prevent movement or creep of gasketed joints.

Plug or close off pipes which are stubbed out for manhole construction or for connection by others.

Provide all sewer pipes, 36 inches or smaller in diameter, entering or leaving manholes or other structures, with flexible joints within 18 inches of the exterior wall. Pipes larger than 36 inches in diameter shall have this flexible joint within a distance from the exterior wall equal to half the inside pipe diameter.

When cutting and/or machining the pipe is necessary, use only tools and methods recommended by pipe manufacturer.

When shown or approved to deflect pipe from a straight line, either in the vertical or horizontal plan, or when long-radius curves are shown, the amount of deflection shall not exceed that specified or approved by the City Engineer. The pipe manufacturer's recommendation will serve as a guide, but the decision of the City Engineer shall be final.

B. Concrete Pipe

Use rubber ring gasket joints unless mortar joints are specifically specified. When mortared joints are used, the entire joint for the full circumference of the pipe shall be completely filled with mortar. The surfaces of the pipe joint shall be brushed clean prior to mortaring. Fill the exterior of the joint with mortar and in the case of bell and spigot joints, fill to an angle of 45 degrees.

C. Corrugated Metal Pipe

Repair all damaged areas of the protective coating with material equal to the original and permit to dry or solidify before backfilling.

601.03.05 Perforated Pipe Underdrains

A. Trench Excavation and Backfill

Conform to applicable requirements in Section 204 (Excavation, Embankment, Bedding, and Backfill). All excavation shall be unclassified.

B. Pipe Bedding

Provide a minimum 4-inch bedding of 1½"-¾" rock under perforated drain pipe, or as shown. Hand grade the bedding to proper grade ahead of pipe laying. Provide a firm, unyielding support along the entire pipe length.

C. Backfill at the Pipe Zone

Backfill the pipe zone with 1½”-¾” rock hand placed simultaneously on both sides of the pipe for the full trench width.

D. Backfill Above the Pipe Zone

Use 1 ½" – ¾" rock for backfill above the pipe zone, unless otherwise specified.

E. Laying and Jointing Perforated Pipe

Securely fasten together perforated pipe with couplings, fittings, or bands as specified by the manufacturer for the type of the pipe used. Close upgrade ends of all subsurface drain pipe with approved plugs to prevent entry of soil materials.

Begin pipe laying normally at the outlet end of the pipe line. The lower segment of pipe shall be in contact with the shaped bedding throughout its full length. Bell or groove ends of rigid pipe and outside circumferential laps of flexible pipe shall be placed facing the upgrade end.

Lay all perforated pipe, except perforated PVC pipe, with perforations facing down, unless otherwise specified or directed. Place perforated PVC drain pipe with slots facing up.

Inspect all pipe prior to lowering into the trench and, if necessary, clean off any material tending to plug the perforations of the pipe. Carefully lower all pipe and fittings into the trench to avoid any contamination of the filter bedding material.

601.03.06 Flared-end Sections

Construct flared-end sections in accordance with the details and dimensions shown, except that minor variations may be accepted to permit the use of the manufacturer's standard prefabricated sections and methods of fabrication. Conform excavation, bedding, and backfill to applicable requirements herein for the adjacent pipe or drain to be joined.

601.03.07 Pipe Coupling Adapters

Use flexible mechanical compression joint coupling with no. 305 stainless steel bands manufactured by Joints, Inc., Fernco Joint Sealer or equal.

601.03.08 Concrete Closure Collars

Only where specified on drawings, construct concrete closure collars in conformance with the details provided. Wash pipe to remove all loose material and soil from the surface on which the concrete will be placed. Wet nonmetallic pipe thoroughly prior to placing the collars. Construct forms with materials that will ensure that no concrete shall enter the line. Make entire collar in 1 placement, and do not place collars in water. After the collars are placed and have taken their initial set, cure by covering with well-moistened earth. Do not backfill the trench until the concrete has sufficient strength.

601.03.09 Culverts

Remove and replace culverts in conformance to all applicable requirements of this section and Section 204 (Excavation, Embankment, Bedding, and Backfill).

601.03.10 Testing Storm Drains

A. General

The Contractor shall make a televised inspection of the storm drain pipe. Any defects in material or workmanship shall be satisfactorily corrected prior to final acceptance of the work.

When the quality of materials used or workmanship performed during the construction of storm drains is in doubt for any reason, the City Engineer may require the storm drain and all applicable appurtenances to be tested. When so ordered, the storm drain shall be

required to pass the same air test as specified for sanitary sewers in Subsection 301.03.10 (Testing).

B. Cleaning Prior to Testing and Acceptance

Prior to final testing, acceptance, and final manhole-to-manhole inspection of the storm sewer system by the City Engineer, ball, flush, and clean all parts of the system. Remove all accumulated construction debris, rocks, gravel, sand silt, and other foreign material from the storm sewer system at or near the closest downstream manhole. If necessary, use mechanical rodding or bucketing equipment.

Upon the City Engineer's final manhole-to-manhole inspection of the storm sewer system, if any foreign matter is still present in the system, reflush and clean the sections and portions of the lines as required.

C. Repairs

Repair or replace, in a manner satisfactory to the City Engineer, any section of pipe not meeting the test requirements, or which has leakage.

Infiltration of ground water following a successful air test as specified, shall be considered as evidence that the original test was in error or that subsequent failure of the pipeline has occurred. Correct such failures occurring within the warranty period in a manner satisfactory to the City Engineer at the Contractor's sole expense.

601.03.11 Deflection Test for PVC, Ribbed PVC, and HDPE Pipe

Perform a deflection test for all storm drains and culverts constructed of PVC, ribbed PVC, and HDPE pipe after the trench backfill and compaction has been completed. The test shall be conducted by pulling an approved solid pointed mandrel or variable deflection measuring gauge through the completed pipeline after compaction is completed. The diameter of the mandrel shall be 95% of the internal pipe diameter. Conduct testing on a manhole-to-manhole basis and only after the line has been completely flushed clean with water. Locate and repair any sections failing to pass the test and retest the section, at the Contractor's sole expense.

601.03.12 Television Inspection of Storm Drains

Upon completion of all storm drain construction, repairs, cleaning, and required tests, notify the City Engineer that all lines are ready for televiewing inspection.

Subsequent to being notified, the City Engineer shall commence examination of lines or may waive the television inspection. Findings will be recorded. Correct all deficiencies at the Contractor’s sole expense.

Upon correction of deficiencies revealed by televiewing, notify the City Engineer; the same steps listed above may be repeated until all work is acceptable.

The Contractor may, at its own option, perform a deflection test at the same time it performs its television inspection.

Before release of the maintenance or warranty bond, the City Engineer may require televised inspection of the piping at the Contractor’s expense. The Contractor shall correct all deficiencies found by this inspection.

When performing television inspections, water shall be added, tracing dye and a 1-inch measuring ball shall be utilized.

601.03.13 Subsequent Failure

No infiltration of ground water in the system is allowed. No standing water greater than ⅜” is allowed.

602 MANHOLES, INLETS AND CONCRETE STRUCTURES

602.01 DESCRIPTION

This section covers the work necessary for the construction of the following items: (1) manholes, (2) sumps, (3) inlets and catch basins, (4) anchor walls, (5) special concrete structures, and (6) concrete encasement.

602.02 MATERIALS

602.02.01 Base Rock

¾-inch minus base rock, conforming to the requirements for crushed aggregate material in Subsection 204.02.05 (Class B Backfill, Crushed Aggregate [¾-inch minus or as Specified]).

602.02.02 Forms

Forms for exposed surfaces shall be steel or plywood. Others shall be matched boards, plywood or other approved material. Form all vertical surfaces. Trench walls, large rock, or earth shall not be used as form material.

602.02.03 Concrete and Reinforced Steel

Concrete and reinforcing steel shall conform to Section 205 (Materials—Types and Use).

602.02.04 Cement Mortar

When specified for use, cement mortar shall conform to Section 205 (Materials—Types and Use). Consistency of mortar shall be such that it will readily adhere to the pipe if using the standard tongue-and-groove type joint. Mortar mixed for longer than 30 minutes shall not be used.

602.02.05 Manholes

A. Standard Precast Manhole Sections

Furnish sections as specified conforming to the details on the standard drawings and to ASTM C 478. Cones shall have same wall thickness and reinforcement as manhole section. Provide eccentric cones with precast grooves for all manholes over 6 feet in depth. Flat slab tops with precast grooves reinforced to withstand AASHTO H20 loadings shall be provided for manholes 6 feet deep from crown of pipe and less. Top and bottom of all sections shall be parallel.

Prior to the delivery of any size of precast manhole section on the job site, yard permeability tests will be conducted at the point of manufacture. The precast sections to be tested will be selected at random from the stockpiled material, which is to be supplied for the job. All test specimens will be mat tested, and shall meet the permeability test requirements of ASTM C 14 and ASTM C 497.

B. Precast Concrete Bases

Construction of precast bases shall conform to the requirements of ASTM C478. The base riser section shall be integral with the base slab.

C. Poured in Place Manhole Bases

Concrete shall conform to Section 205 (Materials—Types and Use).

D. Manhole Grade Rings

Concrete grade rings for extensions shall be a maximum of 6 inches high and shall be Keylock joint.

E. Jointing Materials

Preformed plastic gaskets conforming to the requirements of AASHTO M-198 or joints using confined O-ring with rubber gaskets conforming to ASTM C443 shall be used.

602.02.06 Pipe and Fittings

Conform to requirements of Section 601 (Pipe and Fittings [Storm Drains]).

602.02.07 Precast Inlets and Catch Basins

Precast base and extension units shall conform to ASTM C913 and shall be used in the construction of all inlets and catch basins. Concrete risers for extensions shall be a minimum of 4 inches in height and shall be the same quality as the main section.

602.02.08 Manhole and Cleanout Frames and Covers

A. General

All castings shall be true to size, weight and tolerances shown on the standard drawings. Delivered weight shall be ± 5% of the specified weight. The bearing seat shall not rock when checked by the test jig. The foundry shall supply all test gauges and shall not subcontract any of the work other than testing procedure, patterns, and machining and cartage. The casting shall not be made by the open mold method and shall be free of porosity, shrink cavities, cold shuts, or cracks, or any defects which would impair serviceability. Repair of defects by welding, or by the use of "smooth-on" or similar material will not be permitted. All castings shall be shot or sandblasted, and the application of paint or other coating will not be permitted. All manhole frames and covers located outside of the right-of-way shall be tamper-proof and set to an elevation 1 foot above finish grade.

B. Materials

Conform to ASTM A-48, Class 30B, with the following revisions:

Tensile strength	30,000 PSI
Traverse strength (1.2" dia. bar - 18" centers) Load - Pounds	1,600-3,000
Deflection - inches	0.22-0.34
Brinell hardness (as cast)	173-200

The Foundry shall certify as to the tensile and traverse properties and the Brinell Hardness. The City reserves the right to require a Rough Transverse bar (size of bar 1.2" dia. by 20" long) and/or a tensile bar as per ASTM A 48 for each 20 castings or heat when less than 20 castings are made.

C. Cap Screws

Cap screws and washers for tamperproof and watertight manhole covers shall be stainless steel with 60,000 PSI minimum tensile strength conforming to ASTM A 453.

602.02.09 Standard Frames and Grates for Inlets and Catch Basins

Frames and grates for catch basins and storm drain inlets shall be fabricated of steel conforming to ASTM A 7, A 36, A 373 in accordance with the details shown on the standard drawings. All connections shall be welded. Welding shall conform to requirements of current code for welding in building construction of the American Welding Society. Frames and gratings shall be tested 1 within the other, and there shall be no more than 1/16-inch rock. When checked by a test jig, the bearing seat of either component shall have no more than 1/16-inch rock. Test jibs shall be furnished by the manufacturer.

602.02.10 Steps for Precast Manholes

Manhole steps will comply with Section 302 (Manholes and Concrete Structures).

602.02.11 Storm Sumps

The precast sections will comply with Subsection 602.02.05 (Manholes). The frame and cover will comply with Subsection 602.02.08 (Manhole and Cleanout Frames and Covers) and will be tamper-proof when the sump is located outside the right-of-way. The steps will comply with Subsection 602.02.10 (Steps for Precast Manholes). Drain rock will be clean round imported material and the size will be 2"-4". The filter fabric will be Mirafi 140 or equal.

602.03 CONSTRUCTION

602.03.01 General

A. Excavation and Backfill

Conform to applicable provisions in Section 204 (Excavation, Embankment, Bedding, and Backfill). Backfill around manholes, inlets, catch basins, and other appurtenances shall be of the same quality as the trench backfill immediately adjacent. All excavation shall be unclassified.

B. Base Rock

Place crushed aggregate base rock and thoroughly compact with a mechanical vibrating or power tamper.

C. Foundation Stabilization

If material in bottom of excavation is unsuitable for supporting manholes and other sewer appurtenances, excavate below subgrade as directed and backfill to required grade with rock conforming to Foundation Stabilization in Section 204 (Excavation, Embankment, Bedding, and Backfill).

602.03.02 Manholes

All manholes, except as otherwise specified, shall be constructed using precast, reinforced concrete base sections, riser sections, and other precast appurtenances conforming to ASTM C478. Base riser sections shall be integral with the base slabs.

Preformed plastic gaskets shall be installed in strict accordance with the manufacturer's recommendation. Only pipe primer furnished by the gasket manufacturer will be approved. When using preformed plastic gaskets, manhole sections with chips or cracks in the joint surfaces shall not be used. Completed manholes shall be rigid and all manholes for sanitary sewers shall pass the hydrostatic test. Construct manhole inverts in conformance with the standard drawings. Cover exposed edges of pipe completely with mortar. Trowel all mortar surfaces smooth.

Holes for installing pipe into precast manhole sections shall be cast in place or saw cut.

All manholes shall be constructed with sedimentation bases in conformance with the standard drawings.

602.03.03 Pipe Stubouts From Manholes

Install stubouts from manholes at locations as shown or directed using sand collar or rubber boot. Grout or install pipes into manhole walls or manhole base so as to provide watertight seal around pipes. Provide manhole with resilient connector for PVC pipe. Pipe connection shall be by core drilling only. Pipe connections to the cone section of a manhole are strictly prohibited.

602.03.04 Manhole Grade Rings

In general, manhole grade rings will be used on all manholes in streets or roads or other locations where a subsequent change in existing grade may take place. Extensions will be limited to a maximum height of 12 inches.

Install appropriate combination of grade rings to a height that will accommodate the finish manhole surface elevation as shown on the drawings. Lay grade rings in mortar with sides plumb and tops level. Seal joints with mortar to provide a watertight seal. Grade ring extensions shall be watertight.

602.03.05 Adjustment of Manholes to Grade

Frame and cover shall be left a minimum of 3 inches below finish grade when the first lift of asphaltic concrete is placed. Sawcut around the manhole or cleanout and adjust the frame and cover to match street grade and fill excavation with concrete to a depth of 6 inches. The frame shall bear directly on the concrete. Place final lift of asphaltic concrete. See standard drawing for manhole or cleanout adjustment.

602.03.06 Vacuum Testing

Manholes may be vacuum tested at the discretion of the City Engineer according to guidelines listed in Subsection 302.03.07 (Vacuum Testing).

602.03.07 Concrete Encasement for Storm Drainage Pipe

Conform to the requirements shown on the standard drawings and to applicable requirements of Section 204 (Excavation, Embankment, Bedding, and Backfill). Foundation stabilization, if required, shall be completed and the bottom of the trench compacted. Sides of encasement shall be formed, not poured against soil or rock, unless directed or approved by the City Engineer.

Support pipe true to line and grade before and during placement of concrete. Encasement shall be placed in a minimum of 2 lifts. Provide a keyway on both sides of the encased pipe and vertical reinforcing bond steel as shown on standard drawing. Adequately support the pipe to prevent pipe deflection during concrete placement and initial set.

Reinforcing shall be placed as shown on the appropriate standard drawing.

After concrete encasement has been placed and taken an initial set, cure by covering with well-moistened earth or backfill material for 5 days before conducting compaction operations and air test.

602.03.08 Special Concrete Structures

Conform to the details as shown.

602.03.09 Placing Precast Units

If material in bottom of trench is unsuitable for supporting unit, excavate as directed and backfill to required grade with foundation stabilization material in conformance with Section 204 (Excavation, Embankment, Bedding, and Backfill). Set units to grade at locations shown or directed.

602.03.10 Installation of Inlets and Catch Basins

Install inlets and catch basins at the locations shown on the Plans or where directed by the Design Engineer.

Construct inlets and catch basins as shown on the standard drawings. All inlets and catch basins constructed with precast units shall conform to ASTM C913. The top section, including curb, gutter, and frame, shall be cast-in-place. The Contractor may use poured in place inlets and catch

basins in accordance with the standard drawings. Concrete shall conform to Section 205 (Materials—Types And Use).

Set frames and grates at elevations shown or as directed. Frames shall be cast in concrete. Bearing surfaces shall be clean and provide uniform contact. Anchor bolts and other fastenings shall be firmly embedded in concrete.

Any surrounding structures (e.g., pavement, curbs, gutters, sidewalks, driveways) and landscaping damaged during installation of inlets or catch basins shall be restored in accordance with these Standard Specifications at the Contractor's sole expense.

602.03.11 Inlet and Catch Basin Extensions

Install extensions to height as required. Use the largest size (in height) precast extension risers available from the manufacturer that will allow for conformance with the specified finished grade. Stacking small precast extensions where a larger extension could be used is prohibited. Lay risers in mortar with sides plumb and tops to grade. Joints shall be sealed with mortar, with interior and exterior troweled smooth. Prevent mortar from drying out and cure by applying an approved curing compound or other approved method. Extensions shall be watertight.

602.03.12 Cleaning

Upon completion, clean each structure of all silt, debris and foreign matter.

602.03.13 Steps for Precast Manholes

Steps shall comply with that specified in Subsection 302.02.08 (Steps for Precast Manholes).

602.03.14 Storm Sumps (Drywells)

Storm sumps will be constructed in conformance with City of Milwaukie and DEQ regulations. Maximum depth of stormwater sumps shall not exceed 30 feet as measured from the manhole rim.

603 WORK ON EXISTING STORM DRAINAGE STRUCTURES

603.01 DESCRIPTION

This section covers the work necessary to join new work to existing, the abandoning of storm drains and structures and adjusting existing utility structures to finished grades.

603.02 MATERIALS

Conform to requirements of Section 205 (Materials—Types and Use) and to the requirements for related work referred to herein.

603.03 CONSTRUCTION

603.03.01 Excavation and Backfill

Conform to requirements of Section 204 (Excavation, Embankment, Bedding, and Backfill). All excavation shall be unclassified.

603.03.02 Manholes Over Existing Storm Sewers

Advise City Engineer of system for diverting flow and obtain authorization before starting. The Contractor shall be totally responsible for maintaining adequate capacity for flow at all times and adequately protecting new and existing work.

Construct manholes over existing operating storm sewers at locations shown. Perform necessary excavation and construct new manholes in conformance with applicable requirements of Section 302 (Manholes and Concrete Structures).

Construct manholes as shown on the detail drawings or standard drawings. Densify the concrete base by vibrating or working as approved and screed to provide a level, uniform bearing for precast sections.

Manhole cannot be poured over existing pipe and then top of pipe removed to expose storm drain. Pipe shall be cut outside of manhole with a flexible joint installed either side of manhole as shown in the appropriate standard drawing.

Place the first precast section of manhole in concrete base before concrete has set and deposit sufficient mortar on the base to assure a watertight seal between the base and the manhole wall. First section shall be properly located and plumb. Stacking additional precast manhole sections shall be prohibited until the concrete has cured a sufficient amount to support the additional weight in moist conditions.

Prevent broken material or debris from entering storm sewer. Maintain flow through approved lines at all times. Protect new concrete and mortar for a period of 7 days after placing.

603.03.03 Connection to Existing Manholes, Inlets, and Concrete Structures

Provide all diversion facilities and perform all work necessary to maintain flow in existing lines during connection. Manhole connections shall be done by core drilling only. Grout in new pipe to provide watertight seal, and when applicable, smooth flow into and through existing manhole as specified in Subsection 603.03.09 (Reconstruct Manhole Base).

603.03.04 Removal of Existing Pipes, Manholes, and Appurtenances

Existing pipelines, manholes, and appurtenances which lie in the line of and are to be replaced by the new construction shall be removed from the site and disposed of as provided for in Section 203 (Clearing and Grubbing).

603.03.05 Filling Abandoned Manholes, Inlets, and Catch Basins

Existing manholes, inlets, and catch basins shown to be abandoned shall be filled with granular material as specified in Section 204 (Excavation, Embankment, Bedding, and Backfill). Compact to at least 90% maximum density as determined by ASTM D1557. For catch basins, remove frame and grate. For manholes, remove frame and cover and top cone section (or flat top). Plug all pipes with permanent plugs. Final grade shall be specified by the Design Engineer. Break or perforate the bottom to prevent the entrapment of water.

603.03.06 Existing Manhole Frames and Covers

Manhole frames and covers removed by the Contractor which will not be reused on the project shall become the property of the City at the City's discretion.

603.03.07 Permanent Plugs

Clean interior contact surfaces of all pipes to be cut off or abandoned. Construct concrete plug in end of all pipe 18 inches or less in diameter. Minimum length of concrete plugs shall be 8 inches. For pipe 21 inches and larger, the plugs may be constructed of common brick or concrete block. Plaster the exposed face of block or brick plugs with mortar. All plugs shall be watertight and capable of withstanding all internal and external pressures without leakage.

603.03.08 Adjust Existing Structures to Grade

Existing manholes, inlets, catch basins and similar structures shall be brought to the specified finished grade by methods of construction as required in Section 511 (Adjustment of Existing Structures to Grade).

603.03.09 Reconstruct Manhole Base

Conform to applicable requirements of Section 302 (Manholes and Concrete Structures). Exercise caution in chipping out existing concrete base so as to prevent cracking of manhole walls. Prevent all material from entering the flow. Pour new base to a minimum of 6 inches below the lowest projection of the pipe. Construct new channels to the elevations shown. Conform to details for channel construction in the standard drawings. Repair any cracks which occur as a result of work operations with new grout to form a watertight seal.

603.03.10 Connect Pipe to Existing Inlets

Conform to applicable requirements of Section 302 (Manholes and Concrete Structures). Core drill opening and grout in a watertight seal between the new pipe and inlet wall. Plaster mortar smooth inside pipe opening. Alignment, slope of pipe, and other construction details shall be as specified.

603.03.11 Storm Sump Protection

When a storm sump is encountered the Contractor will take all precautions to protect the structure, and replace all disturbed structures and materials to their original condition.

END OF DIVISION

DIVISION 7—CONCRETE STRUCTURES CONSTRUCTION STANDARDS

TABLE OF CONTENTS

701 CONCRETE STRUCTURES 1

701.01 DESCRIPTION 1

701.02 MATERIALS 1

701.02.01 Portland Cement 1

701.02.02 Aggregates 1

A. General 1

B. Sand for Mortar 1

701.02.03 Water 1

701.02.04 Admixtures 1

A. Air-Entraining Admixtures 1

B. Water-Reducing, Retarding, and Accelerating Admixtures 1

701.02.05 Curing Materials 1

701.02.06 Joint Materials 1

701.02.07 Water Stop 2

A. Plastic 2

B. Rubber 2

C. Copper 3

701.03 CONSTRUCTION 3

701.03.01 Mix Design 3

A. Classes of Concrete 3

B. Sampling and Testing 3

701.03.02 Falsework 3

701.03.03 Forms 3

703.03.04 Removal of Falsework and Forms 4

703.03.05 Adverse Weather 4

A. Hot Weather 4

B. Cold Weather 5

701.03.06 Handling and Placing 5

A. General 5

B. Culverts 5

C. Girders, Slabs, and Columns 6

D. Pumping 6

E. Placing Concrete Under Water 6

701.03.07 Construction Joints 7

A. General 7

B. Bonding 7

701.03.08 Expansion and Fixed Joints and Bearings 7
A. Open Joints 7
B. Filled Joints 7
C. Steel Joints 7
D. Water Stops 8
E. Bearing Devices 8
F. Preformed Elastomeric Joint Seals 8
701.03.09 Surface Finishing 8
A. Formed Surfaces 8
B. Unformed Surfaces 9
701.03.10 Curing 9

702 REINFORCEMENT 10

702.01 DESCRIPTION 10
702.02 MATERIALS 10
702.02.01 Bars 10
702.02.02 Mats 10
702.02.03 Welded Wire Fabric 10
702.02.04 Dowels 10
702.02.05 Wire 10
702.02.06 Epoxy Coated Reinforcement 10
702.02.07 Supports 10
702.02.08 Certification 10
702.02.09 Identification 11
702.03 CONSTRUCTION 11
702.03.01 Shop Drawings 11
702.03.02 Fabrication 11
702.03.03 Placing 11
702.03.04 Splicing 11

701 CONCRETE STRUCTURES

701.01 DESCRIPTION

This work consists of construction of Portland Cement concrete (PCC), reinforced or unreinforced, precast, or cast-in-place, which is used in bridges, box culverts, retaining walls, and other concrete structures.

Process control sampling and testing shall be the responsibility of the Contractor. Testing shall be by a laboratory approved by the Design Engineer. The Contractor will provide certification of all test results to the City Engineer.

701.02 MATERIALS

701.02.01 Portland Cement

Portland Cement shall conform to the requirements of Section 205 (Materials—Types And Use).

701.02.02 Aggregates

A. General

Crushed aggregate shall conform to the requirements of Section 205 (Materials—Types And Use).

B. Sand for Mortar

Sand for mortar shall conform to the requirements of Section 205 (Materials—Types And Use).

701.02.03 Water

Water used in mixing PCC shall conform to the requirements of Section 205 (Materials—Types And Use).

701.02.04 Admixtures

A. Air-Entraining Admixtures

Air-entraining admixtures shall conform to AASHTO M 154.

Chloride content of admixtures used in concrete in contact with embedded metals shall not exceed 0.5%, by weight, of the weight of the admixture.

The admixture shall be able to produce 16% air in a Portland Cement mortar when tested in accordance with AASHTO T 137.

B. Water-Reducing, Retarding, and Accelerating Admixtures

Water reducing, retarding, and accelerating admixtures shall conform to AASHTO M 194.

Chloride content of admixtures used in concrete in contact with embedded metals shall not exceed 0.5%, by weight, of the weight of the admixture.

701.02.05 Curing Materials

Curing materials shall conform to the requirements of Section 205 (Materials—Types And Use).

701.02.06 Joint Materials

All joint materials shall conform to the requirements of Section 205 (Materials—Types And Use).

701.02.07 Water Stop

A. Plastic

Plastic water stops shall be fabricated with a uniform cross section, free from porosity or other defects, to the nominal dimensions shown on the plans. An equivalent standard shape may be furnished if approved by the Design Engineer.

The material from which the water stop is fabricated shall be a homogeneous, elastomeric, plastic compound of basic polyvinyl chloride and other material. No reclaimed material shall be used. The Contractor shall furnish a certificate from the producer showing values for the designated properties. The Contractor shall furnish samples, in lengths adequate for testing, as ordered by the City Engineer.

The water stop shall have the following properties.

PROPERTY	ASTM Test Method	Specification
Tensile Strength (PSI)	D412	1800
Elongation %	D412	350
100% Modulus (PSI)	D412	760
Low Brittle Temperature	D746	-50° F
Cold Bend Test*		No Failures

*Samples maintained at -70° F for 2 hours, then bent quickly around a ¼-inch mandrel to 180°.

B. Rubber

Rubber water stop shall be manufactured to the dimensions shown on the plans in such a manner that the finished product shall have an integral cross section which will be dense, homogeneous, and free from porosity and other imperfections. The water stop shall have the following properties.

1. Hardness

The Shore A Durometer hardness shall be 60 to 70 when tested in accordance with ASTM D 2240.

2. Elongation

Minimum of 450%.

3. Tensile Strength

Minimum of 3000 pounds per square inch.

4. Water Absorption

Maximum of 5% by weight after immersion in water for 2 days at 158° F.

5. Tensile Strength After Aging

The test specimen, after accelerated aging of 7 days at 158° F, shall retain not less that 80% of the original tensile strength. The tensile strength of the test specimen, after accelerated aging of 48 hours in oxygen at 158° F and tensile stress of 300 pounds per square inch, shall be not less that 80% of the original tensile strength.

6. Compression Set

After 22 hours at 158° F, compression set shall be not more that 30% when tested in accordance with ASTM D 395, Method B.

7. Specific Gravity

1.17 +/-0.03.

8. Defects

Minor surface defects such as surface peel covering less than 1 square inch, surface cavities or bumps less that ¼ inch in longest lateral dimensions and less than 1/16 inch deep will be acceptable.

C. Copper

Sheet copper for water stops or flashings shall meet the requirements of ASTM B 152 for type ETP light cold-rolled, soft-anneal.

701.03 CONSTRUCTION

701.03.01 Mix Design

The Contractor shall provide an approved mix design in conformance with the requirements of Subsection 506.03.02 (Preparation of Concrete Mix).

A. Classes of Concrete

If the maximum size of aggregate is not included as a part of the class of concrete shown, the Contractor shall use 1 inch maximum size aggregate in all precast prestressed concrete members, in the stems of posttensioned box girders and in members where reinforcement spacing is closer than 2 inches.

B. Sampling and Testing

The sampling and testing of PCC shall conform to the requirements of Subsection 506.03.02 (Preparation of Concrete Mix). Field-cured cylinders shall be cured under the same conditions as the most unfavorable conditions for the portions of the concrete which the cylinders represent.

701.03.02 Falsework

Working drawings and calculations for falsework shall be prepared and submitted in accordance with Section 104 (Scope of Work) and shall be stamped by an engineer registered to practice in the State of Oregon.

701.03.03 Forms

Forms shall be set and maintained until the concrete is sufficiently hardened. Forms shall be mortar-tight and of sufficient rigidity to prevent distortion due to the pressure of the concrete and other loads incidental to the construction operations. Forms shall be designed and constructed to prevent warping and the opening of joints and so the finished concrete will conform to the proper final dimensions and contours.

Deck forms for concrete box girder spans shall be supported by the girder stems. Posts or other supports for deck forms will not be permitted to come in contact with the bottom slab of the box girder.

Wood forms for concrete surfaces not subject to backfill shall be made of dressed lumber of uniform thickness, with a form liner of an approved type, and mortar-tight. Wood forms for the interior of cells of box girders may be made with or without a form liner. Shiplap or S4S boards

are acceptable provided the forms are mortar-tight. Plywood will be acceptable as a form liner if supported in an approved manner.

Metal ties or anchorages within the forms shall be constructed to permit their removal to a depth of at least 1 inch from the face without injury to the concrete. When ordinary wire ties are permitted, all wires shall be cut back at least ¼ inch from the face of the concrete upon removal of the form. The cavities shall be filled with cement mortar and the surface left sound, smooth, even, and uniform in color.

For narrow walls and columns, where the bottom of the form is inaccessible, openings near the bottom shall be provided for cleaning out extraneous material before placing the concrete.

All forms shall be treated with an approved release agent before placing the concrete. Material which will adhere to or discolor the concrete shall not be used.

703.03.04 Removal of Falsework and Forms

When field operations are controlled by cylinder tests, forms and shoring for structural slabs or beans shall remain in place until the concrete has reached 75% of the specified 28-day compressive strength. Until that time, the Contractor shall not place earth backfill against walls below grade.

When field operations are not controlled by cylinder tests, the following intervals, exclusive of days when the temperature is below 40° F, may be used as a guide for removal of forms and supports.

Part of Structures	Interval
Supports under beams	14 days
Floor slabs	7-14 days
Walls	12-24 hours
Columns	1-7 days
Sides of beams and all other parts	12-24 hours

Methods of form removal likely to cause overstressing of the concrete shall not be used. Supports shall be removed in a manner that will permit the concrete to uniformly and gradually carry the stresses due to the structure's own weight.

All formwork shall be removed from the cells of concrete box girders to which access is provided, and all formwork except that necessary to support the deck slab shall be removed from the remaining cells of the box girder. All wood formwork and all form supports and braces shall be removed from the interior of structural steel box girders.

The design of the posttensioned structures is such that the structure is not self-supporting until posttensioning is complete. The Contractor shall consider this in the design, maintenance, and protection of falsework.

703.03.05 Adverse Weather

A. Hot Weather

During hot weather, the Contractor shall make all reasonable efforts to maintain the temperature of the concrete below the specified minimum temperature. When concrete temperatures approach 90° F, the City Engineer may require the use of ice or ice water for mixing the concrete and/or require precooling aggregate stockpiles by sprinkling. Mix proportions shall be adjusted so cooling ice or water does not adversely affect the water/cement ratio of the concrete. No concrete with temperatures over 90° F shall be placed.

B. Cold Weather

No concrete shall be placed when the ambient temperature is below 35° F. When directed, the Contractor shall enclose the structure in such a way that the concrete and air within the enclosure can be kept above 60° F for a period of 7 days after placing the concrete. When enclosures are used to maintain specified temperatures, the Contractor shall furnish a 24-hour temperature-recording thermometer to record air temperature within the enclosure.

The Contractor shall supply heating equipment and the necessary fuel. When dry heat is used, the Contractor shall provide means to maintain the appropriate atmospheric moisture content.

The temperature of the concrete shall be not less than 60° F at the time of placing in the forms. In case of extremely low temperatures, the City Engineer may raise the minimum limiting temperatures for water, aggregates, and mixed concrete.

Insulated forms capable of maintaining the surface of the concrete at no less than 50° F may be used in lieu of other protection of concrete involving housing and heating. Exposed horizontal surfaces shall be protected and insulated. If the forms do not maintain the proper temperature at the surface of the concrete, auxiliary protection and heat shall be used.

701.03.06 Handling and Placing

A. General

The interior of forms shall be cleaned of all sawdust, chips, and other debris. Struts, stays and braces, serving temporarily to hold the forms in correct shape and alignment prior to the placing of concrete, shall be removed when the concrete placing has reached that elevation.

Concrete shall be placed in horizontal layers not more that 12 inches thick. When less than a complete layer is placed in 1 operation the pour shall be terminated in a vertical bulkhead. Each layer shall be placed and consolidated before the preceding layer has taken initial set to avoid surfaces of separation between the layers. Concrete shall not be permitted to free-fall through reinforcing steel or from a height of more than 5 feet.

When the placing of concrete is temporarily discontinued, the top surface of the concrete adjacent to forms shall be smoothed with a trowel. After becoming firm enough to retain its form, the concrete shall be cleaned of laitance and other objectionable material to expose sound concrete. Where a feathered edge might be produced at a construction joint, as in the sloped top surface of a wing wall, inset formwork shall be used to produce a blocked out portion in the preceding layer which shall produce an edge thickness of not less than 6 inches in the succeeding layer. Work shall not be discontinued within 18 inches of the top of any face, unless provision has been made for a coping, in which case a construction joint shall be made at the underside of the coping.

B. Culverts

The base slab or footings of box culverts shall be placed and allowed to set before the remainder of the culvert is constructed. Suitable provision shall be made for bonding the sidewalls to the culvert base.

Before concrete is placed in the sidewalls, the culvert footings shall be thoroughly cleaned of all laitance, shavings, sticks, sawdust, or other extraneous material and the surface carefully chipped and roughened.

In the construction of box culverts 4 feet or less in height, the sidewalls and top slab may be constructed monolithically. When this method of construction is used, construction joints shall be vertical and at right angles to the axis of the culvert.

In the construction of box culverts more than 4 feet in height, the concrete in the walls shall be placed and allowed to set before the top slab is placed. Keys shall be constructed in the sidewalls for anchoring the cover slab.

Each wing wall shall be constructed monolithically.

C. Girders, Slabs, and Columns

Concrete in girders shall be deposited uniformly for the full length of the girder and brought up evenly in horizontal layers, with no lift lines or cold joints.

Concrete pours in columns and abutments or walls shall be stopped at the bottoms of caps, cross beams, girders, or any widened portion of the column or wall, and the concrete allowed to obtain its initial shrinkage and settlement before the pour is continued. This delay shall not be less than 12 hours for pours over 4 feet in height.

Mechanical shear keys shall be formed in all construction joints in columns. Shear keys shall be approximately 2 inches in depth, and shall be approximately ⅓ the width of the column in both directions, centered in the column.

Concrete pours in T-beams and box girders shall be stopped at the bottom of the deck or deck fillet and the concrete allowed to obtain full shrinkage and settlement before the pour is continued. The delay shall be not less that 12 hours when the beams or girders are over 4 feet in height. Similar delays shall be incorporated into concrete pours at the intersection of any structural members where concrete settlement could cause cracking at the intersection. Mechanical shear keys shall be formed between girder stems and slabs, and in vertical construction joints where permitted. The keys shall be spaced along the girder stem as required, but the spacing shall not exceed 1 foot center to center.

Concrete in the bottom slab of box girder structures shall be poured to the bottoms of beam stems or stem fillets. Before the stems are poured, the bottom slab concrete shall be allowed to cure a minimum of 3 days at ambient temperatures of 40° F or above, or for at least 5 days at ambient temperatures below 40°.

No concrete shall be placed in the superstructure until the column forms have been stripped sufficiently to determine the character of the concrete in the columns. The load of the superstructure shall not be allowed to come upon the bents until they have achieved specified strength.

D. Pumping

Concrete may be placed by pumping provided the Contractor and uses equipment capable of placing the concrete as specified. The operation of the pump shall produce a continuous stream of concrete without air pockets. When pumping is completed, the concrete remaining in the pipeline, if it is to be used, shall be ejected in a manner that will not cause contamination of the concrete or segregation of the ingredients.

Any additional costs involved in placing concrete by these methods shall be at no expense to the City.

E. Placing Concrete Under Water

Concrete shall be placed under water only with the approval of the City Engineer.

Concrete placed under water shall be carefully placed in a consolidated mass, in its final position, by means of a tremie or by pumping and shall not be disturbed after being deposited. Still water shall be maintained at the point of placement.

Concrete seals shall be maintained continuously from start to finish and the surface of the concrete shall be kept horizontal at all times. To ensure thorough bonding, each succeeding layer of a seal shall be placed before the preceding layer has taken initial set. The concrete in seals shall be poured at a minimum rate of 50 cubic yards per hour.

A tremie shall consist of a tube, having a minimum diameter of 10 inches, of sufficient length to reach from the bottom of the excavation to the concrete placing elevation above the water line. The tremie shall have an attached receptacle or hopper for receiving concrete. A jointed tremie will be permitted, provided the joints are flanged and gasketed and are watertight. The tremie shall be supported to permit free movement of the discharge end over the entire top surface of the work and to permit rapid lowering when necessary to retard or stop the flow of concrete.

At the start of the work and on any withdrawal of the pipe for moving to a new location, the discharge end shall be closed to prevent water from entering the pipe. During the progress of the work the pipe shall be entirely sealed at all times and kept full of concrete to the bottom of the hopper. When a batch is dumped into the hopper, the flow of concrete shall be induced by slightly raising the discharge end, always keeping it in the deposited concrete. The placing of concrete shall be continuous until the work is completed.

701.03.07 Construction Joints

A. General

At construction joints, shear keys or inclined reinforcement shall be used where necessary to transmit shear or to bond the 2 sections together.

B. Bonding

Before depositing new concrete on or against concrete which has hardened, the forms shall be retightened. The surface of the hardened concrete shall be roughened in a manner that will not leave loosened particles or aggregate or damaged concrete at the surface. The surface shall be thoroughly cleaned of foreign matter and laitance and saturated with water. The cleaned and saturated surfaces shall be thoroughly covered with a coating of mortar or cement grout. The new concrete shall be placed before the grout coating has attained an initial set.

The placing of concrete shall be continuous from joint to joint.

701.03.08 Expansion and Fixed Joints and Bearings

A. Open Joints

Open joints shall be constructed with the use of a removable template of approved material. The template shall be removed without chipping or breaking the corners of the concrete. Reinforcement shall not extend across an open joint.

B. Filled Joints

Poured expansion joints shall be constructed similar to open joints. Premolded filler shall be placed in position inside the form as the concrete on the first side of the joint is placed. When the form is removed, the concrete on the other side of the premolded filler shall be placed.

C. Steel Joints

The plates, angles or other structural shapes shall be shop fabricated to conform to the section of the concrete deck. Care shall be taken to ensure that the surface of the steel joint in the finished plane is true and free of warping. The joints shall be secured in a manner to keep them in the correct position during the placing of the concrete. The

opening at expansion joints at normal temperature shall be as shown, and care shall be taken to avoid impairment of the clearance in any manner.

D. Water Stops

Water stops shall be spliced, welded or soldered to form continuous watertight joints. Where movement at the joint is provided for, the water stops shall be designed to permit such movement without damage to the water stop or the joint.

E. Bearing Devices

Bearing devices shall be set in plastic concrete or grout to ensure uniform bearing. Rockers and other expansion devices shall be set in the proper position for the temperature at the time of erection.

F. Preformed Elastomeric Joint Seals

Preformed elastomeric joint seals shall be in the longest practicable lengths for longitudinal joints. In transverse joints, 1 factory splice will be permitted where the required length of material in any 1 joint exceeds manufactures' standard lengths. Splices shall be true and smooth on the outside surfaces with no offsets of abutting sections and with complete bond on all abutting surfaces. Joints shall be clean, dry and free of spalls and irregularities which would impair a tight seal in service. Seals shall be placed in the joint under compression, as recommended by the manufacturer, using a lubricant-adhesive applied to both sides of the seal just prior to installation.

The seal shall contact the walls of the joint throughout the length of the seal. The seal shall be removed and reinstalled when the longitudinal elongation of the seal is 3% or more from the original length.

All lubricant-adhesive which comes upon the top of an installed seal shall be removed before it dries. Seals with twist, curls, nicks or other malformations shall be removed and replaced. Prior to installation, the ends of seals shall be plugged with a watertight plug. The plug shall be foam rubber or other acceptable closed cell cellular material that is compressible to 15% of the uncompressed thickness. The plug shall be a minimum of 2 inches in length and shall be secured in the elastomeric joint seal with an adhesive that will ensure a watertight plug.

701.03.09 Surface Finishing

A. Formed Surfaces

All concrete surfaces, except for roadways and sidewalks, shall receive a general surface finish. The finish shall extend to a point 1 foot below any adjoining ground surface. Class 1, 2, or 3 finishes, if required, shall be applied to all exposed concrete surfaces except the underside of decks and between girders.

Surface finishes shall meet the following requirements.

1. General Surface Finish

General surface finish shall consist of filling all depressions resulting from removal of form ties and repairing all rock pockets. All form bolts and any metal placed for the convenience of the Contractor shall be removed to a depth of 1 inch below the surface of the concrete. All rock pockets and other unsound concrete shall be removed and the resulting holes or depressions filled with mortar. When rock pockets affect the strength of the structure of endanger the life of the reinforcement, the concrete shall be removed and replaced. For exterior surfaces where only a Class 1 finish is required, white cement shall be added to the mortar to tint the mortar to match the concrete being repaired.

2. Class 1 Surface Finish (Unpainted)

Class 1 surface finish shall consist of all work required for general surface finish, plus removal of bulges, fins, depressions, stains, discolorations, and other imperfections to produce a smooth, even surface of uniform texture and appearance.

3. Class 2 Surface Finish (Ground and Painted)

After completion of the General and Class 1 surface finish the surface shall be ground with a power grinder, or other approved method, to remove laitance and surface film which may impair adherence of the paint. The unpainted surface shall then be thoroughly saturated with water and painted while damp with a latex emulsion paint. A minimum of two coats of paint shall be applied, with additional coast as necessary to provide uniformity in coverage and appearance.

4. Class 3 Surface Finish (Ground, Floated, and Painted)

After completion of the General and Class 1 surface finish, the surface shall be thoroughly ground with a power grinder or other approved method to remove all laitance and surface film resulting from form treatment. The surface shall then be finished by floating with a suitable float using a paste of fine sand and cement to fill all air holes and voids and bring the surface to a smooth and uniform texture. The surface shall be kept damp until the finish has set so that dusting will not occur when the surface is rubbed. After the paste has set for a least 24 hours, the surface shall be thoroughly saturated with water and, while damp, painted with a latex emulsion paint. A minimum of 2 coats of paint shall be applied with additional coats as necessary to provide uniform coverage and appearance.

B. Unformed Surfaces

Unformed surfaces shall be finished in conformance with Subsection 506.03.02 (Preparation of Concrete Mix) and Subsection 506.03.10 (Finishing).

701.03.10 Curing

Concrete surfaces shall be cured by covering with burlap, canvas, sand, or other satisfactory material. The covering shall be placed as soon as the concrete has hardened sufficiently to support the covering without damage to the concrete surface. The cover shall be kept continuously moist for a minimum of 7 days. The type of covering provided shall be that which is best suited to the conditions.

When coverings are not necessary, the surfaces shall be kept continuously moist be flushing or sprinkling. The sprinkling system shall be arranged to keep the outside of all forms damp for a period of 7 days after the placing of concrete.

Slab concrete exposed to conditions causing premature drying during pouring operations shall be protected by providing wind breaks, fog spray, or by other methods approved by the City Engineer.

702 REINFORCEMENT

702.01 DESCRIPTION

This work consists of furnishing and placing of metal reinforcement and accessories.

702.02 MATERIALS

702.02.01 Bars

Bars shall be deformed and fabricated from billet steel conforming to the requirements of ASTM A 615, rail steel conforming to the requirements of ASTM A 616, or axle steel conforming to the requirements of ASTM A 617. All bars in reinforced concrete pavement shall be Grade 60.

702.02.02 Mats

Steel for bar or rod mats shall conform to the requirements of ASTM A 184.

702.02.03 Welded Wire Fabric

Welded wire fabric shall conform to the requirements of AASHTO M 55.

702.02.04 Dowels

Dowels shall conform to the requirements of AASHTO M 227, Grade 70.

702.02.05 Wire

Wire shall conform to the requirements of AASHTO M 32.

702.02.06 Epoxy Coated Reinforcement

Epoxy coated reinforcement shall conform to the requirements of AASHTO M 284 and the following.

1. Visible voids in the coating, regardless of cause, shall be patched if the total area of voids exceeds 0.25% of the surface area of the bar. Bars which require patching in excess of 5% of the total surface area of the bar will be rejected.
2. Systems for handling coated bars shall have padded contact area for the bars. All bundling bands shall be padded and all bundles shall be lifted with strong back multiple supports or a platform bridge to prevent bar-to-bar abrasion from sags in the bar bundle.
3. Coated steel shall be tied and supported with nonmetallic coated ties and supports.

702.02.07 Supports

Bar supports and their placement shall conform to Chapter 3 of the CRSI "Manual of Standard Practice." Bar supports in areas exposed to view after stripping shall be of galvanized or plastic coasted steel, or of concrete, as approved by the City Engineer.

702.02.08 Certification

Certification of bar reinforcement will identify the reinforcement by heat number.

The certification shall also contain the weight, number of pieces and dimensions of each size of material of each heat number shipped, the project identification, and the date of shipment. If a color code is used for identification, the heat number and color combinations shall also be shown.

702.02.09 Identification

Each piece of bar reinforcement shall be identified so the City Engineer can determine the heat number prior to use in the work. Reinforcement shall be tagged and marked in accordance with the CRSI "Manual of Standard Practice."

702.03 CONSTRUCTION

702.03.01 Shop Drawings

Shop drawings shall be submitted in accordance with the requirements of Section 104 (Scope of Work). Shop drawings details for bar reinforcement shall conform to Chapter 6 of the CRSI "Manual of Standard Practice." Shop drawing details for welded wire fabric shall conform to Chapter 2 of the same manual.

702.03.02 Fabrication

Fabrication shall conform to Chapter 7 of the CRSI "Manual of Standard Practice."

702.03.03 Placing

Reinforcement shall be accurately placed in the positions shown on the plans and maintained in position during the placing of concrete. Bars in top mats of footings and deck slabs shall be tied at all intersections. All other bars shall be tied at all intersections except where spacing is less than 1 foot in each direction when alternate intersections shall be tied.

Distance from the forms shall be maintained by means of stays, blocks, ties, hangers, or other approved supports. Blocks for holding reinforcement from contact with the forms shall be precast mortar blocks of approved shape and dimensions and shall have the same compressive strength as the concrete in which they are placed.

Layers of bars shall be separated by precast mortar blocks or by other approved devices. The use of pebbles, pieces of broken stone or brick, metal pipe and wooden blocks will not be permitted.

The placing of bar reinforcement shall conform to the requirements of Chapter 8 of the CRSI "Manual of Standard Practice."

Reinforcement in any member shall be inspected and approved by the City Engineer before the placing of concrete begins. Concrete placed in violation of this provision may be rejected.

702.03.04 Splicing

Splicing shall conform to the requirements of the CRSI "Manual of Standard Practice."

END OF DIVISION

SECTION 1—GENERAL REQUIREMENTS

TABLE OF CONTENTS

1.0000 GENERAL 1
1.0010 AUTHORITY AND PURPOSE 1
1.0020 ENGINEERING POLICY 1
1.0030 APPLICABILITY 1
1.0040 CONFLICTING CODES 2
1.0050 STANDARD SPECIFICATIONS 2
1.0060 APPROVAL OF ALTERNATE MATERIALS OR METHODS 2
1.0070 SPECIAL DESIGN PROBLEMS 2
1.0080 REVISIONS TO DESIGN STANDARDS 2
1.0090 DEFINITIONS 3

1.1000 CONSTRUCTION PLANS 10
1.1010 GENERAL INFORMATION 10
1.1020 PLAN PREPARATION 10
1.1021 Sheet Size 10
1.1022 Scale of Plans 10
1.1030 REQUIRED SHEETS 10
1.1031 Title Sheet 10
1.1032 Plan Sheet 11
1.1033 Profile Sheet 12
1.1034 Detail Sheets 12
1.1040 SUPPORTING INFORMATION 12
1.1041 Facility Plan 13
1.1042 Erosion Control Plan 13
1.1043 Franchise Utility Plans 13
1.1050 PLAN SUBMITTAL AND REVIEW PROCEDURES 13
1.1060 AS-BUILT PLAN REQUIREMENTS 13
1.1061 Street 14
1.1062 Storm Drains 14
1.1063 Sanitary Sewer 14
1.1064 Water Main 15

1.0000 GENERAL

1.0010 AUTHORITY AND PURPOSE

The City of Milwaukie's Public Works Standards will establish and provide specific, technical direction for the design and construction of all streets and associated utility projects. For additional downtown requirements not included in these standards, please refer to the Milwaukie Downtown and Riverfront Plan Public Area Requirements. The City Council is, through the adoption of these standards, endorsing a comprehensive set of design and construction practices that are designed to deliver high quality improvements to the citizens of Milwaukie.

Public works improvements are conditioned through the development review process, this Ordinance, other ordinances, and other City policies adopted by the City Council or the Public Works Director. No street, bridge, or utility construction shall commence prior to the City approval of the construction plans. Designs submitted shall be stamped by a Registered Professional Engineer licensed to practice by the State of Oregon.

The purpose of these Design Standards is to provide a consistent policy under which certain physical aspects of public facility design will be implemented. Most of the elements contained in these standards are Public Works oriented and it is intended that they apply to both public improvements under City contract and public improvements under private contract designated herein.

These Design Standards cannot provide for all situations. They are intended to assist but not to substitute for competent work by design professionals. It is expected that engineers will bring to each project the best of skills from their respective disciplines.

The Design Standards are also not intended to unreasonably limit any innovative or creative effort, which could result in better quality, better cost savings, and/or better life cycles. Any proposed departure from the Design Standards will be judged, however, on the likelihood that such variance will produce a compensating or comparable result in every way adequate for the user and city resident. Alternate materials and methods will be considered for approval by the City Engineer as the need arises and conditions warrant modification. This consideration will be on a case-by-case basis and require sufficient justification prior to approval.

1.0020 ENGINEERING POLICY

It shall be the policy of the City of Milwaukie to require compliance with ORS 672 for professional engineers.

All engineering plans, reports, or documents shall be prepared by a registered professional engineer, or by a subordinate employee under the engineer's direction, and shall be signed by the engineer and stamped with the engineer's seal to indicate the engineer's responsibility for them. This engineer is designated by these Standards to be the Design Engineer. It shall be the Design Engineer's responsibility to review any proposed public facility extension, modification, or other change with the City prior to engineering or proposed design work to determine any special requirements or whether the proposal is permissible. A "Preliminary Review" and/or a "Plans Approved for Construction" stamp of the City on the plans, etc., for any job, does not in any way relieve the Design Engineer of responsibility to meet all requirements of the City or obligation to protect life, health, and property of the public. The plan for any project shall be revised or supplemented at any time it is determined that the full requirements of the City have not been met.

1.0030 APPLICABILITY

These Design Standards shall govern all construction and upgrading of all public and privately financed public facilities in the city of Milwaukie and applicable work within its service areas.

1.0040 CONFLICTING CODES

Where these Design Standards conflict with other applicable codes, the more restrictive code shall prevail.

1.0050 STANDARD SPECIFICATIONS

All construction design detail, workmanship, and materials shall be in accordance with the current edition of the City of Milwaukie Public Works Standards.

1.0060 APPROVAL OF ALTERNATE MATERIALS OR METHODS

Any substitution material or alternate method not explicitly approved herein will be considered for approval as set forth in Subsection 1.0010 (Authority and Purpose). Persons seeking such approvals shall make an application in writing. Approval of any major deviation from these Design Standards will be in written form. Approval of minor matters will be made in writing if requested.

Any alternate must meet or exceed the minimum requirements set in these Design Standards.

The written application shall include, but is not limited to, the manufacturer's specifications and testing results, design drawings, calculations, and other pertinent information.

Any deviations or special problems shall be reviewed on a case-by-case basis and approved by the City Engineer. When requested by the City, full design calculations shall be submitted for review with the request for approval.

1.0070 SPECIAL DESIGN PROBLEMS

Special applications not covered in these Design Standards require review and approval by the City Engineer. Submittal of full design calculations, supplemental drawings, and information will be required prior to any approval.

Such applications which may require special review and approval are among, but not limited to, the following.

Sewer Force Mains
Relining of Existing Sewers
Internal Sealing of Existing Sewers
Sewer Regulatory Devices
Sewage Pump Stations
Sewer Siphons
Sewage Treatment Plants
Sewer Flow Measurement/Monitoring Devices
Water Distribution Pump Stations
Relining of Existing Water Mains
Water Pressure Regulating Devices
Energy Dissipaters
Water Reservoirs
Water Treatment Plants
Water Flow Measurement/Monitoring/Telemetry Devices
Storm Sewer

1.0080 REVISIONS TO DESIGN STANDARDS

It is anticipated that revisions to these Design Standards will be made from time to time. The date appearing on the title page is the date of the latest revision. Users should apply the latest published issue to the work contemplated.

Parenthetical notations at the end of sections indicate the most recent change to those sections. All sections without notations are from the original Design Standards as adopted. Some sections may be changed more than once and it shall be the user's responsibility to maintain their copy of these Design Standards with the latest changes.

1.0090 DEFINITIONS

AASHTO
American Association of State Highway and Transportation Officials.

Alley
A public access easement or right-of-way not more than 20 feet and not less than 12 feet in width, which intersects with a public street. A street primarily intended to provide secondary access to another street or side of lots or buildings not intended for normal through vehicular traffic. An alley shall have a minimum 20-foot turning radius.

Approved backflow prevention device
A backflow prevention device that has been investigated and approved by the Oregon State Health Division.

Arterial street
A major facility for moving intra-area traffic and for moving traffic to and from the freeway/expressway system as designated in the Transportation Master Plan.

As-built plans
Plans signed and dated by the Design Engineer indicating that the plans have been reviewed and revised, if necessary, to accurately show all as-built construction details.

Back siphonage
Backflow that results from negative pressure (partial vacuum) in the supply piping system.

Backflow
The reverse of flow from its normal or intended direction of flow. Backflow can be caused by back pressure or back siphonage.

Backflow preventer
An approved device or means to prevent backflow into the potable water system.

Bike lanes
A delineated travelway for bicyclists which is established within the roadway directly adjacent to the outside vehicular lane or on the shoulder.

Bikeway/bike path
A designated travelway for bicyclists which is completely separated from the vehicular travel lanes and is within independent rights-of-way.

Building service lateral
A private sanitary sewer beginning at the sewer main and extending to a building.

Building sewer
A private sanitary sewer from a building to the sewer main.

Building supply
A pipe carrying potable water from a water meter or other source of water supply to a building or other point of use or distribution on a lot. Building supply shall also mean customer line.

CBE
Crushed based equivalent (CBE) is the number that directly relates the traffic coefficient to the number of inches of rock.

City
The City of Milwaukie, Oregon.

City Engineer
The City Engineer, or Engineering Director, of the City of Milwaukie acting either directly or through authorized representatives.

City street
A city street is a street that is maintained by the City. A private street is not maintained by the City, but is designed and constructed to the same standards as a city street.

Collection systems
Facilities maintained by the City of Milwaukie connected thereto for the collecting, pumping, conveying, and controlling of wastewater.

Collector sewer
The portion of the public sewerage system which is primarily installed to receive wastewater directly from individual residences and other individual public or private structures.

Collector street
A facility that allows traffic within an area or neighborhood to connect to the arterial system.

Community development code
The sections of the City of Milwaukie Municipal Code designed to set forth the standards and procedures governing development and use of land in Milwaukie and to implement the Comprehensive Plan. These include Titles 14 (Signs), 17 (Land Division), and 19 (Zoning).

Comprehensive Plan
The official document of Milwaukie that includes goals and policies that direct how Milwaukie will develop. It may also include action measures or strategies for implementing the goals and policies. The Comprehensive Plan is adopted by ordinance and is the basis for the community development code.

Constructed wetlands
Those wetlands developed as a water quality or quantity facility, subject to change and maintenance as such and which are defined and/or separated from naturally occurring or created wetlands.

Core
To cut and remove a portion of pipe with a circular hollow drill.

Created wetlands
Those wetlands developed in an area previously identified as nonwetland to replace or mitigate wetland destruction or displacement and which are regulated and managed the same as a natural wetland.

Cross-connection
Any actual or potential physical connection between a potable waterline and any pipe or vessel containing a nonpotable or potable (e.g., well) fluid (suspended solid or gas) so that it is possible to introduce the nonpotable fluid into the potable fluid by backflow.

Cul-de-sac
A dead-end street having a turnaround area at the end.

Curb
The concrete structure indicating the edge of the vehicular roadway within the overall right-of-way.

Cut sheets
Sheets of tabulated data, indicating stationings, structures, fittings, angle points, beginning of curve, points on curve, end of curves, storm drain slope, staking offset, various elevations, offset cuts, and storm drain depths for streets, waterlines, sanitary sewers, and storm drains.

Datum
The vertical elevation control.

Dead-end street
A street or series of streets which can be accessed from only one point. Dead-end streets can be either temporary (intended for future extension as part of a future street plan) or permanent.

Dedication
The legal conveyance of land, typically from a private property owner to the City.

Definition of words
That, whenever, in these Standards, the words "directed", "required", "permitted", "ordered", "designated," or words of like importance are used, they shall be understood to mean the direction, requirement, permission, or order of designation of the City Engineer. Similarly, the words "approved", "acceptable", or "satisfactory", shall mean approved by, acceptable to, or satisfactory to the City Engineer.

Design Engineer
The engineer, licensed by the State of Oregon as a Professional Engineer under whose direction plans, profiles, and details for the work are prepared and submitted to the City for review and approval, or who is in charge of and responsible for construction of the improvement.

Designated arterial or collector street
A street designated as an arterial or collector in the Comprehensive Plan.

Detention
The holding of runoff for a designed period of time and then releasing it to the natural water course.

Development
Any man-made change defined as buildings or other structures, mining, dredging, paving, filling, or grading in amounts greater than 10 cubic yards on any lot or excavation. Development does not include the following: a) Stream enhancement or restoration projects approved by cities and counties; b) Farming practices as defined in ORS 30.930 and farm use as defined in ORS 215.203, except that buildings associated with farm practices and farm uses are subject to the requirements of Title 3; and c) Construction on lots in subdivisions meeting the criteria of ORS 92.040(2).

Domestic sewage
The liquid and water-borne waste derived from ordinary living processes, free from industrial wastes, and of such character to permit satisfactory disposal without special treatment into the public sewer or by means of a private sewage disposal system.

Double check detector check valve assembly
A line-sized, approved, double check valve assembly with a parallel meter and meter-sized, approved, double check valve assembly. The purpose of this assembly is to provide backflow protection for the distribution system and, at the same time, provide a metering of the fire system showing any system leakage or unauthorized use of water.

Double check valve assembly
An assembly composed of 2 single, independently acting, approved check valves, including tightly closing shutoff valves located at each end of the assembly and fitted with properly located test cocks.

Drainage facilities
Pipes, ditches, detention basins, creeks, culvert bridges, etc., used singularly or in combination with each other for the purpose of conveying or storing storm water runoff.

Easement
Areas located outside of dedicated rights-of-way, which are granted to the City for special uses.

(Private) Easement
An area on a parcel that benefits other parcel(s) by granting special uses.

Erosion control, post construction
The re-establishment of groundcover or landscaping prior to the removal of temporary erosion control measures.

Erosion prevention and sediment control
Measures that are required for construction sites where the ground surface will be disturbed with clearing, grading, fills, excavations, and other construction activities, in order to prevent and/or control eroded material and sediment from leaving the construction site and entering the City storm system and/or a water quality resource area.

Erosion, visible or measurable
Includes, but is not limited to: deposits of mud, dirt, sediment, or similar material, exceeding ½ cubic foot in volume on public or private streets, adjacent property, or into the storm and surface water system, either by direct deposit, dropping discharge, or as a result of the action of erosion.

Expansion joint
A joint to control cracking in the concrete surface structure and filled with preformed expansion joint filler.

Fire hydrant assembly
The fire hydrant and attached auxiliary valve from a water main to a hydrant.

Fire protection service
A metered connection to the public water main intended only for the extinguishment of fires and the flushing necessary for its proper maintenance.

Flood or flooding
A general and temporary condition of partial or complete inundation or normally dry land areas from the overflow of inland or tidal waters, and/or the unusual and rapid accumulation of runoff of surface waters from any source.

French drain or leach line
A covered underground excavated trench filled with washed gravel that surrounds a perforated pipe.

Grade
The degree of inclination of a road or hillside.

Impervious areas
Those hard surface areas located upon real property which either prevent or retard saturation of water into the land surface and cause water to run off the land surface in greater quantities or at an increased rate of flow from that present under natural conditions preexistent to development.

Industrial street
A street which functions primarily to provide access to local abutting industrial land and is designed to accommodate industrial traffic.

Industrial waste
Solid, liquid, or gaseous waste resulting from any industrial, manufacturing, trade, or business process due to development, recovery, or processing of natural resources.

Interceptor sewer
The primary public sanitary sewer which conveys wastewater directly into the wastewater treatment plant.

Intersection
The area formed by 2 or more streets intersecting. This area is defined by the intersection of right-of-way lines. For design purposes, an intersection is not formed by naming 2 approaches of a continuous street on a curve or some other point with different street names.

Irrigation service
A metered connection intended for seasonal use and delivering water, which is not discharged to the sanitary sewer.

Lateral sewer
A building service lateral.

Local or residential street
A facility designated to serve primarily direct access to abutting land. Through-traffic movement is deliberately discouraged on local residential streets.

Longitudinal joint
A joint which follows a course approximately parallel to the centerline of the roadway.

Manager
The City Manager of the City of Milwaukie acting either directly or through authorized representatives.

Milwaukie Downtown and Riverfront Plan Public Area Requirements
Planning document that provides requirements for improvements in the public right-of-way in downtown Milwaukie.

MUTCD
Manual on Uniform Traffic Control Devices, current edition.

Natural drainageway
A natural depression which collects drainage of surface water. It may be permanently or temporarily inundated.

Natural grade
The grade of the land in an undisturbed state.

Natural resource
A functioning natural system such as a wetland or stream.

Natural resource area
The land containing the natural resources to be protected.

On-site detention
The storage of excess runoff on a development site prior to its entry into a public storm drain system. Stored runoff is gradually released after the peak of the runoff has passed.

Owner
The owner of record of real property as shown on the latest tax rolls or deed records of the county or a person who furnishes evidence that they are purchasing a parcel of property under a written recorded land sale contract.

Partition
To divide an area or tract of land into 2 or 3 parcels within a calendar year when such area or tract of land exists as a unit or contiguous units of land under single ownership at the beginning of such year.

Peak runoff
The maximum water runoff rate (cfs) determined for the design storm.

Person
Individual firm, corporation, association, agency, or other entity.

Plans
Construction plans, including system plans, sewer plans, and profiles, cross sections, detailed drawings, etc., or reproductions thereof, approved or to be approved by the City Engineer, which show the location, character, dimensions, and details for the work to be done, and which constitute a supplement to these standards.

Potable water
Water which is satisfactory for drinking, culinary, and domestic purposes and meets the requirements of the health authority having jurisdiction.

Private collection system
A privately owned and maintained lateral sewer system installed to serve multiunit structures on single ownership properties which cannot legally be further divided.

Private storm drain
A storm drain located on private property serving one or more structures or inlets and is not owned or maintained by the City.

Public sanitary sewer
Sanitary main in public right-of-way or easement operated and maintained by the City for carrying sewage and industrial wastes.

Public storm drain
Any storm sewer in public right-of-way or easement operated and maintained by the City.

Release rate
The controlled rate of release of drainage, storm, and runoff water from property, storage pond, runoff detention pond, or other facility during and following a storm event.

Right-of-way
All land or interest therein which (by deed, conveyance, agreement, easement, dedication, usage, or process of law) is reserved for or dedicated to the use of the public for sidewalk, utility, and/or roadway purposes.

Riparian areas
Lands which are adjacent to rivers, streams, lakes, ponds, and other water bodies. They are transitional between aquatic and upland zones, and may contain elements of both ecosystems. They may have high water tables because of their close proximity to aquatic systems, soils which are usually largely of water-carried sediments, and some vegetation that requires free (unbound) water or conditions that are more moist than normal.

Roadway
All of that portion of the right-of-way used or to be used for vehicle movement which exists between the curbs, proposed curb lines, or edges of pavement.

Sedimentation
Deposition of debris and soil.

Sewage
Water-carried wastes from residences, business buildings, institutions, and industrial establishments, except industrial wastes.

Shared roadway
A roadway where bicyclists and motorists share the same travel lanes. These are provided where bike lanes may be warranted, but there is inadequate width to provide them.

Sidewalk
A walkway or raised path along the side of a road for pedestrians. A right-of-way deeded, dedicated, and designated for the use of nonmotorized vehicles and pedestrians.

Silt
Fine textured soil particles, including clay and sand, as differentiated from coarse particles of sand and gravel.

Siltation
Deposition of (silt) fine textured waterborne sedimentation.

Standard drawings
The drawings of structures or devices commonly used on public improvements and referred to on construction plans contained in the Milwaukie Public Works Standard Construction Specifications.

Stream
A body of running water moving over the earth's surface in a channel or bed, such as a creek, rivulet, or river. It flows at least part of the year, including perennial and intermittent streams. It is dynamic in nature and its structure is maintained through a build-up and loss of sediment.

Streets or roads
Any public highway, road, street, avenue, alley, way, easement, or right-of-way used or to be used for motorized vehicles.

Structures
Those structures designated on the standard plans such as catch basins, manholes, etc.

Subdivision
To divide an area or tract of land into 4 or more lots within a calendar year when such area or tract of land existed as a unit or contiguous units of land under a single ownership at the beginning of such year.

Superelevation
Sloping of a road cross section to improve drivability around a curve or spiral.

Traffic coefficient
A number used in determining the structural section of a street.

Transition area
The land adjacent to a natural resource area that constitutes a buffer to protect the resource from conflicting development and activities.

Transverse joint
A joint, which follows a course approximately perpendicular to the centerline of the roadway.

Traveled way
That portion of the roadway for the movement of motorized vehicles, exclusive of shoulder and the median.

Trunk sewer
(Interceptor) A sanitary sewer which is primarily intended to receive wastewater from a collector sewer, another trunk sewer, an existing major discharge of raw or inadequately treated wastewater, or water pollution control facility.

Turnaround area
A paved area of sufficient size and configuration that a motor vehicle may maneuver so as to travel in the opposite direction.

Uniform Plumbing Code
The Uniform Plumbing Code adopted by the International Association of Plumbing and Mechanical Officials (current edition), as revised by the State of Oregon, called the "Oregon State Plumbing Specialty Code".

Wastewater
The total fluid flow in the sanitary sewerage system which includes industrial waste, sewage, or any other waste (including that which may be combined with any ground water, surface water, or storm water) that may be discharged into the sanitary sewerage system.

Water distribution system
Water pipelines, pumping stations, reservoirs, valves, and ancillary equipment used to transmit water from a supply source through a service meter.

Water main
A water supply pipe for public use.

Water service line
The pipe connection from the City water main to the users' water meter, hydrant, backflow prevention device, or fire sprinkler double check valve.

Wetlands
Those lands adjacent to watercourses or isolated therefrom which may normally or periodically be inundated or saturated by the waters from the watercourse or the drainage waters from the drainage basin in which it is located. These include swamps, bogs, sinks, marshes, and lakes, all of which are considered to be part of the watercourse and drainage system of the City and shall include the headwater areas where the watercourse first surfaces. They may be, but are not necessarily, characterized by

special soils such as peat, muck, and mud and under normal circumstances support a prevalence of vegetation typically adapted for a life in saturated soil conditions.

1.1000 CONSTRUCTION PLANS

1.1010 GENERAL INFORMATION

Prior to any construction work and plan approval, complete construction plans, specifications and all other necessary submittals shall be submitted to the City Engineer for review. Submittal requirements consist of design plans (where required), drainage calculations, and other information as necessary. Conditions of approval from the Development Plan Review process, or as specified by the City Council, the Planning Commission, Hearings Officer or the Planning Director shall be shown on the design plans.

1.1020 PLAN PREPARATION

Construction plans and specifications shall be prepared by a professional engineer licensed by the State of Oregon, as specified in Subsections 1.1020 (Plan Preparation) and 1.1030 (Required Sheets).

1.1021 Sheet Size

All construction plans shall be clearly and legibly drawn in ink on 22 x 34 inch or 24 x 36 inch size sheets. Sheets shall have a 1½-inch clear margin on the left edge and a ½-inch margin on all other edges.

1.1022 Scale of Plans

When plans are prepared for developer financed projects, the scale of drawings shall be as follows. Horizontal scales shall be 1” = 10’, 20’, 30’, 40’, or 50’, vertical scales shall be 1” = 2’, 4’, 5’, or 10’. For subdivision plans it is preferred that all plan views and profile views of the plan set are drawn at a common scale, if more than one scale is necessary, the difference should be large enough to be noticeable (e.g. 1” = 20’ & 1” = 50’). When a scale is used which is smaller than 1” = 20’ (e.g. 1” = 40’) intersection details showing fittings and valves shall be provided at a larger scale.

Architectural scales (e.g., ¼" = 1'0") are not permitted unless approved.

Letter size shall not be smaller than 0.10 inch.

1.1030 REQUIRED SHEETS

Construction plan submittals shall contain the following minimum sheets: title sheet (unless not required by the City Engineer) plan and profile sheet(s), and detail sheet(s). A title block shall appear on each sheet of the plan set and shall be placed on the lower right-hand corner of the sheet, across the bottom edge of the sheet or across the right-hand edge of the sheet. The title block shall include the names of the project, the engineering firm, the owner, the sheet title, and page number.

The seal and signature of the Design Engineer responsible for preparation of the plans shall appear on each sheet as well as the Design Engineer’s phone number.

The description and date of all revisions to the plans shall be shown on each sheet affected, and shall be approved and dated by the Design Engineer as evidenced by signature or initial.

1.1031 Title Sheet

All subdivision projects and multiple sheet improvement projects shall have a title sheet as the first page of the construction plans. This sheet shall contain the following minimum information.

1. Site plan of entire project with street right-of-way and/or subdivision layout at a 1" = 100' scale. A 1" = 200' scale may be used if project size is too large. The site plan shall also

be a composite utility plan showing all properties served by proposed sewer, water, and storm facilities, in addition to the proposed facility.

2. Vicinity map at a 1" = 1000' scale or greater. Map shall show the location of the project in respect to the nearest major street intersection.

3. Index of sheets.

4. Complete legend of symbols used.

5. General and construction notes pertinent to project, space permitting. If space does not permit a separate note page shall be used.

6. Temporary and/or permanent benchmarks used along with their descriptions, elevations of benchmark, and datum.

7. Design Engineer's name, address, phone number, and seal.

8. Developer's/owner's name, address, and phone number for public improvements with private financing.

9. Statement referencing City of Milwaukie Public Works Standard Construction Specifications.

10. Provide contact phone number for all affected utility companies.

11. Show tax lot numbers or lot and block designations.

12. Conditions of approval.

1.1032 Plan Sheet

The plan view of each sheet shall be drawn at the appropriate scale showing the following minimum information.

1. Adjacent street curbs, property lines, right-of-way lines, utility easements referenced to property lines, street centerlines, and intersections. Show property corner and curb elevations to determine water service level, serviceability of lot/property for sanitary sewer, points of disposal for building storm drains, and how new curbs will join to existing curbs.

2. Location of all underground utilities within 100 feet of project (if they are affected by the project), existing power/telephone poles and guy anchors, valves, manholes, catch basins, fire hydrants, meter boxes and vaults, signs, etc.

3. Location of all water courses, railroad crossings, culverts, bridges, large water transmission pipes and gravity sewers, and/or storm drains within 200 feet of proposed gravity sewer and storm drain extensions if they affect the design of the project. All water courses shall show the 100-year flood plain as indicated on the U.S. Army Corps of Engineers and Federal Emergency Management Agency (FEMA) maps.

4. On sewer and storm drain plans, each manhole, catch basin, and cleanout shall be numbered and stationed. Stationing shall tie to existing street monuments, property corners, or manholes. Each separate line shall be separately designated (e.g., sewer line 'A', storm line 'A', etc.).

5. On street plans, horizontal stationing shall show points of tangency and curvature for centerline; curve data shall show tangent length, radius distance, centerline curve length, and delta angle. Centerline intersection stationing, in both directions, shall be shown.

6. Where streets are being widened, edge of pavement elevations shall be shown to determine pavement cross-slope to new curb or pavement edge.

7. On water plans, show all fittings and valves and identify by type (e.g., MJ x MJ, FLG x MJ, etc.); fire hydrants; intersection details for valves and fittings (required when scale of plans is smaller than 1" = 20', e.g., 1" = 40').

8. On all plans, show stubouts and blockouts for future developments.

1.1033 Profile Sheet

Profiles for construction plans shall be the same horizontal scale as the plan sheet. Where profiles are drawn on the same sheet as the plan view, the profile shall be immediately below the plan view. The following minimum information shall be shown.

1. For sewers and storm drains, show locations of manholes, catch basins, and cleanouts, with each numbered and stationed as indicated in Subsection 1.1032 (Plan Sheet) item 4.

2. Existing profile at centerline of proposed utility or street. Profiles at the right-of-way lines will be required if grade differences are significant.

3. Proposed profile grade, as appropriate, for all sewers, storm drains, and waterlines, giving pipe size, length between structures or fittings, slope, backfill and pipe material, sewer inverts, rim elevations, etc. Extension of the profile of streets for future extensions (stub streets) will be extended at least 200 feet for local streets or as required by the City Engineer.

4. Existing underground utilities that cross the alignment of the proposed facility.

5. Beginning of all vertical curves, points of vertical intersection, end of vertical curve, low point of sag curve, and length of vertical curve. Profiles of existing centerline grade shall extend a minimum of 250 feet beyond the end of the improvement.

6. Clearly show all potential conflicts with existing public and private utilities (i.e., pipes, conduits, vaults, cathodic protection systems, etc.) that impact proposed design.

7. Profiles for ditch and creek flowlines shall extend a minimum of 200 feet beyond the project, both upstream and downstream. Typical cross sections at 50-foot intervals shall also be submitted.

SPECIAL NOTE: City of Milwaukie as-builts are only to be used as an aid to the engineer. When a potential conflict may occur, the Design Engineer shall field locate, or cause to be located, and verify the alignment, depth, and inverts of all existing facilities shown on the plans that will be crossed by the proposed facility.

1.1034 Detail Sheets

Detailed drawings shall be included with all construction plans where City of Milwaukie standard drawings do not exist. If a standard drawing, such as sewer manholes, must be modified to fit existing or unique conditions, the modified drawing shall be shown on the plans. When appropriate, due to required detail complexity, a separate detail sheet shall be drawn. When City standard drawing appurtenances or construction installations are to be used, a reference to the specific standard drawing number shall be made on the title sheet.

1.1040 SUPPORTING INFORMATION

The Design Engineer shall submit sufficient supporting information to justify the proposed design. Such information shall include, but not be limited to, the following:

1. Design calculations.
2. Hydrology and hydraulic calculations with basin maps.
3. Alternate materials specifications including manufacturer's design application recommendation.
4. Grading plan support information to include as appropriate.
   a. Soils classification report

b. Hydrology report
c. Geotechnical engineer's report

1.1041 Facility Plan

When designing sanitary or storm sewer facilities, a facility plan shall be submitted with the construction plans when required by the City Engineer. This plan shall be used to identify and analyze the proposed extension of facilities. The topographic plan shall show all upstream and tributary areas within no less than 200 feet of the proposed development.

The plan shall include existing contours at 2-foot intervals, or as approved by the City, including location of existing structures and public and private utilities.

1.1042 Erosion Control Plan

The erosion control plan shall address the measures as required by the Erosion Prevention and Sediment Control Plans, Technical Guidance Handbook (ECTGH) (Clackamas County Department of Utilities, 2001). Construction projects beginning prior to May 1 or those projects anticipating construction activity between November 1 and April 30 will be required to submit a plan addressing "wet weather" measures as outlined in the ECTGH. Construction activity is assumed as "active" until all permanent vegetation and/or erosion protection is established.

The plan shall include existing contours at 2-foot intervals, or as approved by the City, including location of erosion control facilities (i.e., silt fence, straw mulch, sediment ponds, etc.); outlet structures (i.e., catch basins, culverts, creeks, etc.); and existing public and private utilities.

1.1043 Franchise Utility Plans

Franchise utility company plans—including, but not limited to, telephone, natural gas, power, and cable television—shall be submitted to and approved by the City Engineer prior to any construction of these utilities.

1.1050 PLAN SUBMITTAL AND REVIEW PROCEDURES

Construction plans for all privately financed public works facility improvements shall be submitted to the City Engineer. The City Engineer will coordinate the plan review and approval of all construction plans which will include review for compliance with all Milwaukie Public Works Standard Construction Specifications, the Milwaukie community development code, Municipal Code, Ordinances, and the project conditions of approval.

All plan submittals shall include information required in Subsection 1.1040 (Supporting Information) along with all other information requested by the City Engineer. This information is to include, but not be limited to, construction cost estimates, easement documents, right-of-way dedications, executed agreements, and a plan check and inspection fee. All submittals will be reviewed for completeness and the Design Engineer notified if required information is missing. Submittals should be made in a timely manner as lack of information to the City may impede the review process.

1 set of completed construction plans shall be submitted for the review. A complete construction cost estimate will be submitted for review and determining review fees. Once the plans are deemed complete, a detailed review will begin on a "first-in, first-out" basis. If the submittal is not complete, notification will be given by the City to the Design Engineer specifying information needed.

Upon completion of the detailed review, the City will notify the Design Engineer, by way of letter, any revisions or "Red-line comments" the City may have. The Design Engineer will revise the plans, addressing all items in the City's letter, and return 6 sets of revised plans to the City for approval.

1.1060 AS-BUILT PLAN REQUIREMENTS

For all public works facility improvements the Design Engineer shall submit certified As-built drawings for all plans, which were approved for construction and a copy of the recorded plat. One set of As-built

drawings shall be submitted for preliminary review. If the first submittal is not acceptable, the City Engineer will notify the Design Engineer of information needed for resubmittal.

As-built drawings shall meet the requirements of Subsections 1.1020 (Plan Preparation), 1.1030 (Required Streets), and 1.1060 (As-Built Plan Requirements) and shall be of archival quality. At a minimum, the drawings shall be 3 mil Mylar. Original inked mylars or photographic mylars may be submitted.

Electronic as-built drawings including 1 full set of AutoCAD files and a copy of the final plat, shall be submitted in a format and on disks acceptable to the City Engineer. As-built drawings shall include all field changes.

The Design Engineer shall submit, along with the As-built drawings, a statement certifying that all work for which plans were approved has been completed in accordance with the Milwaukie Public Works Standard Construction Specifications.

The words "as-built drawing" shall appear as the last entry in the revision block along with the month, day, and year the as-built drawing was prepared.

NOTE: Actual location and depth from finish grade of any other utilities encountered during construction shall be shown and noted on both plan and profile of the as-built plans.

1.1061 Street

The following minimum information shall be noted on street as-built drawings.

1. Change in horizontal alignment, curve data, and stationing of primary control points (e.g., PC, PI, PT, PRC).
2. Vertical curve or grade changes; change in location of low point in sag vertical curve.
3. Change to approved thickness for street structural section components. Show station limits where changes in structural section have occurred.
4. Change to driveway locations or widths.
5. Other changes altering the approved plans.

1.1062 Storm Drains

The following minimum information shall be noted on storm drain as-built drawings.

1. Station of wye or tee into main line. Tie end of branch line to nearest property corner at right-of-way line and distance back from the face of curb.
2. Alignment changes, grade changes, and changes in construction materials. If changed alignment results in station changes, a station equation shall be shown as appropriate at a manhole.
3. Other change altering the approved plans.

1.1063 Sanitary Sewer

The following minimum information shall be noted on sanitary sewer as-built drawings.

1. Station of wye or tee into main line. Tie end of service lateral to nearest property corner at right-of-way line and distance back from the face of curb.
2. Depth at the end of service lateral measured from existing ground to invert of pipe. When required by the City Engineer, invert elevations shall be noted.
3. Length of service lateral measured from centerline of sewer main to end of pipe.

4. Alignment changes, grade changes, and changes in construction materials. If changed alignment results in station changes, a station equation shall be shown as appropriate at a manhole.
5. Other changes altering the approved plans.
6. Provide complete test results to the City Engineer.
7. Type of pipe, backfill material and location.
8. All rim and invert elevations on manholes, catch basins, and clean outs.

1.1064 Water Main

The following minimum information shall be noted on water main as-built drawings.

1. Station and/or property line/corner to valves (not at standard location), all fittings, blow-offs, and dead-ended lines.
2. All changes from standard 36-inch depth cover. Limits shall be shown on plan with annotated reason for change. Actual pipe elevation (top of pipe) will be taken at every fitting.
3. Show alignment changes, grade changes, and changes in construction materials. If changed alignment results in station changes, a station equation shall be shown as appropriate at a valve.
4. Identify types of fittings (i.e., MJ x MJ, FLG x MJ, etc.); provide information in the form of an inventory list on construction drawings.
5. Other change altering the approved plans.
6. Provide design calculations and complete test results to the City Engineer.
7. Actual location and depth, from finish grade of street, of any other utilities encountered during construction.

END OF SECTION

SECTION 2—STORMWATER DESIGN STANDARDS

TABLE OF CONTENTS

2.0000 STORM DRAINS 1
2.0010 GENERAL DESIGN REQUIREMENTS 1
2.0011 Site Drainage Plans 2
A. Existing Drainage Plan 2
B. Proposed Drainage Plan 2
C. Drainage Calculations 2
D. Detention Requirements 2
E. Water Quality Requirements 3
2.0012 Pipe Materials and Size 3
2.0013 Minimum Design Criteria 3
A. Storm Detention Facility 3
B. Water Quality Facility 3
C. Conveyance Piping 4
2.0014 Culverts 4
2.0015 Bridges 4
2.0020 ALIGNMENT AND COVER 4
2.0021 Right-of-Way Location 4
2.0022 Curvature 4
2.0023 Minimum Cover 5
2.0024 Easements 5
2.0025 Relation to Watercourses 5
2.0030 STRUCTURE LOCATION 5
2.0031 Manholes 5
2.0032 Gutter Inlets/Catch Basins 6
2.0033 Service Lateral 6
2.0040 STORMWATER DETENTION/RETENTION 7
2.0041 Development Not Requiring Detention 7
2.0042 Floodplain Information 7
2.0043 Emergency Overflow 7
2.0044 Detention Facilities 7
2.0045 Infiltration Facilities [Underground Injection Control (UIC)] 8
2.0050 WATER QUALITY FACILITIES 9
2.0051 Criteria for Requiring Construction of a Water Quality Facility 9
2.0052 Plan Requirements 9
2.0053 Facility Design 9
2.0060 EROSION CONTROL 9
2.0070 PRIVATE DRAINAGE SYSTEMS 10
2.0071 Subdivisions 10
2.0072 Subsurface Drainage 10

2.0000 STORM DRAINS

2.0010 GENERAL DESIGN REQUIREMENTS

Performance Standards: Storm drainage design within a development area must include provisions to adequately control runoff from all public and private streets and the roof, footing, and area drains of residential, multi-family, commercial, or industrial buildings. The design must ensure future extension of the drainage system to the entire drainage basin in conformance with the adopted Storm Drainage Master Plans and these Design Standards. These provisions include:

1. Surface or subsurface drainage, caused or affected by the changing of the natural grade of the existing ground or removal of natural ground cover or placement of impervious surfaces, shall not be allowed to flow over adjacent public or private property in a volume or location materially different from that which existed before development occurred, but shall be collected and conveyed in an approved manner to an approved point of disposal.

2. Surface water entering the subject property shall be received at the naturally occurring locations and surface water exiting the subject property shall be discharged at the natural locations with adequate energy dissipaters within the subject property to minimize downstream damage and with no diversion at any of these points.

3. The approved point of disposal for all storm water may be a storm drain or a detention or retention pond approved by the City Engineer. Existing open channels, creeks or streams are approved points of disposal after the stormwater has been treated for water quality. Acceptance of suggested systems will depend upon the prevailing site conditions, capacity of existing downstream facilities, and feasibility of the alternate design.

4. When private property must be crossed in order to reach an approved point of disposal, it shall be the developer's responsibility to acquire a recorded drainage easement of dimensions in accordance with those included in Subsection 2.0024 (Easements). Temporary drainage ditch facilities, when approved, must be engineered to contain the storm water without causing erosion or other adverse effects to the private property.

5. The peak discharge from the subject property may not be increased from conditions existing prior to the proposed development, except where it can be satisfactorily demonstrated by the applicant that there is no adverse impact.

6. Retention/detention facilities will be required where necessary to maintain surface water discharge rates at or below the existing design storm peak discharge, except where it can be demonstrated by the applicant that no adverse impact will result from not providing said facilities.

7. Permanent stormwater quality control facilities will be required for all new developments.

8. Drainage from roofs, footings, and downspouts shall drain to a private stormwater management system. Systems other than residential drywells shall be designed by an engineer and reviewed by City Engineering staff for approval.

9. Vegetation shall be established on areas disturbed by/or on areas of construction, as necessary, to minimize erosion in accordance with Chapter 16 of the Milwaukie Municipal Code.

   All storm drain system designs shall make adequate provisions for collecting all storm water runoff. The system shall accommodate all runoff from upstream tributary areas whether or not such areas are within the proposed development. The amount of runoff to be accommodated shall be based upon ultimate development of all upstream tributary areas.

   Proposed storm drain systems shall not discharge flows into inadequate downstream systems unless approved by the City Engineer.

Public storm lines shall be located within the public right-of-way as directed by the City Engineer, per Subsection 2.0021 (Right-of-Way Location). These lines are placed in the public right-of-way for ease of maintenance and access, control of the facility, operation of the facility, and to provide required replacement and/or repair.

10. Applicant must obtain all necessary permits (Division of State Lands, Army Corps of Engineers, Oregon Department of Fish and Wildlife, etc.)

2.0011 Site Drainage Plans

A. Existing Drainage Plan

Provide a topographical contour map defining existing conditions to include the following minimum information.

1. 2' contour intervals; slopes over 10% may use 5' intervals; extend contours a minimum of 100 feet beyond property.
2. All structures, buildings, parking lots, and utilities on the property.
3. Locations of all existing drainage facilities and watercourses, including wetlands and floodplain areas.
4. Locations of all subsurface water outlets (e.g., springs).
5. Arrows to indicate direction of flow for all drainage information.

B. Proposed Drainage Plan

Show proposed site grading and drainage facilities on a topographical contour map. Unless the detail for proposed improvements will obscure the conditions shown on the existing drainage plan, proposed site grading and drainage may be shown on the existing drainage plan. The following minimum information shall also be shown.

1. Finished contours of the property, after development, at 2' or 5' intervals as required.
2. Percent grade for graded slopes; elevations, dimensions and locations for all graded slopes.
3. Cut/fill areas; structural fill placement areas; erosion/sedimentation control methods; reseeding areas.
4. All proposed drainage facilities—public and private systems; paved areas, curbs, sidewalks; drainage ditches, culverts.

C. Drainage Calculations

Furnish such supporting information as required per Subsection 1.2040 (Supporting Information) of these Design Standards.

D. Detention Requirements

All proposed development will be required to use adequate drainage management practices. Developments located within a master planned drainage basin will follow the recommendations adopted in that plan. On-site storm detention shall be constructed to ensure that new construction and development does not increase flooding or erosion downstream.

E. Water Quality Requirements

New development and other activities that create new impervious surfaces shall construct permanent water quality facilities to reduce contaminants entering the storm and surface water system.

2.0012 Pipe Materials and Size

All public storm drains shall be constructed with concrete, PVC, or HDPE smooth interior, corrugated exterior pipe as specified in Division 6 (Storm Drain Construction Standards) of the Standard Construction Specifications. Ribbed PVC pipe is the preferred pipe for storm drains of 24” or less in diameter. Where required for additional strength, ductile-iron pipe or concrete pipe meeting the requirements of Division 6 (Storm Drain Construction Standards) shall be used.

Corrugated aluminum alloy pipe may be used for culvert applications if material is specified as having a 75-year design life and is specifically approved by the City Engineer.

Private storm drainpipe shall meet the requirements of the Uniform Plumbing Code.

All public storm drain main lines shall be a minimum of 12” in diameter. All lateral lines to catch basins and other inlet structures shall be a minimum of 10" in diameter. Storm drain lines, which convey water from building rain drains and/or footing drains, may be a minimum of 4" in diameter, except where 3” lines are acceptable under sidewalks and curbs. All pipe shall have rubber gasket joints.

New construction and reconstruction of light rail and freight rail may require improvements to the storm drainage system at utility crossing locations. Existing pipes in the second half of their useful life within the rail zones must be replaced to current standards. Metallic or conductive pipe materials are not approved pipe materials at light rail crossings.

Pipes are to be centered under rail tracks to avoid joints located underneath rail lines. All new pipe installations shall identify practical future replacement options for the pipe under rail lines. All pipes shall be sized for full build-out and future flows. This sizing includes allowance for trenchless technologies. Where lining is anticipated, add pipe size to account for lining thickness.

2.0013 Minimum Design Criteria

A. Storm Detention Facility

Storm detention facilities shall be designed to provide storage up to the 25-year storm event, with the safe overflow conveyance of the 100-year storm event. Calculations of site discharge for both the existing and proposed conditions shall be required using the Unit Hydrograph Method. Storms to be evaluated shall include the 2-, 5-, 10-, 25-, and 100-year events. Allowable postdevelopment discharge rate for the 2-, 5-, 10-, and 25-year events shall be that of the predevelopment discharge rate. An outfall structure such as a “V-Notch” weir or a single or multiple orifice structure shall be designed to control the release rate for the above events. No flow control orifice smaller than 1.0 inch shall be allowed. If the maximum release rate cannot be met with all the site drainage controlled by a single 1.0-inch orifice, the allowable release rate provided by a 1.0-inch orifice will be considered adequate as approved by the City Engineer.

B. Water Quality Facility

All Water Quality Facilities shall meet the design requirements of the current City of Portland, Stormwater Management Manual, as amended and adopted by the City of Milwaukie and the requirements of Subsection 2.0050 (Water Quality Facilities) of this manual. See standard drawing no. 624 for approved plantings for greenstreet water quality facilities.

C. Conveyance Piping

1. Time of Concentration

Overland flow of runoff to the initial catchment point into the storm drain system shall be a minimum of 5 minutes.

2. Velocity and Slope

All storm drains shall be on a grade which produces a mean velocity when flowing full, of at least 2' per second. The slope shall not be less than .0055.

3. Velocity in Natural Channels

Control of discharge from developed areas to natural channels shall be such that the average velocity resulting from all design storms less than or equal to the 10-year event remains below the erosive velocity of the channel.

4. Manning's Equation

When calculating minimum pipe slopes and velocities, the Design Engineer shall use the Manning pipe friction formula.

5. Pipe Coefficient

The storm drainpipe roughness coefficient to be used in the Manning formula shall be not less than 0.013.

6. Design Storm

The minimum design storm is the 100-year event.

2.0014 Culverts

Culverts at road crossings in natural, perennial channels shall be designed to pass the peak discharge for the 25 year design storm such that the headwater:

1. does not exceed 1.5 times the culvert diameter; OR
2. remains at least 1 foot below the roadway subgrade, whichever is less; AND
3. does not go over top of the road for 100-year storm event.

Culverts must allow for fish passage and must meet the requirements of the Division of State Lands, Army Corps of Engineers and Oregon Division of Fish and Wildlife.

2.0015 Bridges

New and replacement bridges over natural, perennial channels shall be designed to pass the 100 year peak discharge from the tributary area assuming full development. Vertical clearance between the design water surface and the bottom of any part of the bridge shall be a minimum of two feet, or 25% of the mean channel width between ordinary high water marks at the crossing, whichever is greater.

2.0020 ALIGNMENT AND COVER

2.0021 Right-of-Way Location

Storm drain lines shall generally be located 5 feet (south and east) from right-of-way centerline. All changes in direction of pipe shall be made at an approved structure.

2.0022 Curvature

Storm drain lines shall not be curved between structures.

2.0023 Minimum Cover

All storm drains shall be laid at a depth sufficient to protect against damage by traffic, including rail traffic, and to drain building footings where practical. Sufficient depth shall mean the minimum cover from the top of the pipe to finish grade at the storm drain alignment.

Minimum cover shall be 30" above the top of the bell of pipe in paved areas and 36" at all other locations. If minimum cover requirements cannot be met, then additional strength measures shall be required. The minimum cover at rail crossings is 5'.

In areas of relatively flat terrain, the Design Engineer shall show that sufficient depth is provided at the boundary of the development to properly drain the remainder of the upstream basin tributary area to the site.

2.0024 Easements

When it is necessary to locate storm drains in easements, the storm drain shall be centered in the easement. All storm drain easements shall be exclusive and shall not be used for any purpose that would interfere with the unrestricted use of the storm drain line. Exceptions to this requirement will be reviewed on a case-by-case basis (e.g., a utility corridor in a new subdivision).

Easements for storm drain lines 18" or less in diameter shall have a minimum width of 15'. All pipelines greater than 18" in diameter shall have a minimum width of 20'. Larger widths may be required for special circumstances, such as excessively deep pipe or location of building near the easement.

Open channels shall have easements sufficient in width to cover the 100-year floodplain line when a 100-year design storm is required, or 15' from the waterway centerline, or 10' from the top of the recognized bank, whichever is greater. A 15'-wide access easement shall be provided on both sides of the channel for channel widths greater than 14' at the top of the recognized bank.

Easement locations for public storm drains serving a PUD, apartment complex, or commercial/industrial development shall be in parking lots, private drives, or similar open areas which will permit unobstructed vehicle access for maintenance.

All easements must be furnished to the City Engineer for review and approval prior to recording.

Minimum width of an access easement from an existing public road to a drainage facility shall be 15 feet.

Easements shall state that the City will not in any way be responsible for replacing landscaping including any shrubs or trees, fencing, or other structures that may exist or have been placed in the easement.

2.0025 Relation to Watercourses

Storm drain lines shall enter a creek or drainage channel at 90° or less to the direction of flow. The outlet shall have a head wall and scour pad or rip rap to prevent erosion of the existing bank or channel bottom. The size of pipe or channel being entered will govern which protective measures are required. All protective measures must conform to the requirements of Chapters 30 and 31 of the community development code.

2.0030 STRUCTURE LOCATION

2.0031 Manholes

Manholes shall be located at all changes in slope, alignment, and pipe size; and at all pipe junctions with present or future storm drains.

Manhole inside drop shall not exceed 4’.

Manhole spacing shall not be greater than 400 feet.

Standard manholes are required when rim to crown of pipe elevations exceed 4' at pipe junctions. Flat-top manholes shall be used when rim to crown of pipe elevations are less than 4'.

At locations where the downstream pipe size is greater than the upstream pipe size, the crown of all upstream pipes shall not be lower than the crown of the downstream pipe.

Manholes shall not have open grate lids with the intent to receive surface flows except in special circumstances approved by the City Engineer. Catch basins or gutter inlets shall typically be used.

Manholes connected to drywells or other underground injection control (UIC) devices shall have 2-hole lids. Manholes connected to storm systems that outfall to surface waters shall have the City of Milwaukie “Fish” lid. “Fish” lids shall be obtained from the City of Milwaukie Public Works Department. Tamper proof lids will be required on manholes outside vehicle or pedestrian travel ways. Rims shall be 1 foot above the finished grade if not in a paved area.

All accessible structures must be located a minimum of 15 feet from railroad crossing gate arms outside of the rail area, at least 25 feet from a light rail track centerline, and 50 feet from the rail track centerline for freight and higher speed trains.

2.0032 Gutter Inlets/Catch Basins

Gutter inlets shall be located in streets at the curbline to receive storm water runoff and convey it to the main storm drain. Where gutter inlets cannot be installed because of physical limitations, catch basins may be installed with approval from the City Engineer.

Gutter inlets or catch basins shall be located at the following locations, but in no case be spaced further than 400 feet.

1. At curb returns on the upstream side of an intersection.
2. At the ends of all dead-end streets with a descending grade.
3. At intermediate locations so that storm flows at the curbline do not exceed 3' in width (measured from the curb face) or 3" in depth (measured at the curb face), whichever is less.

Gutter inlets or catch basins shall be capable of intercepting completely the design storm flow at the curb. The City Engineer may require multiple or oversized inlets or other special considerations for sags and “downhill” cul-de-sacs.

All accessible structures must be located a minimum of 15 feet from railroad crossing gate arms outside of the rail area, at least 25 feet from a light rail track centerline, and 50 feet from the rail track centerline for freight and higher speed trains**.**

2.0033 Service Lateral

Service laterals are those private storm drain lines to which a private building storm drain connects.

The minimum inside diameter of a storm drain service lateral shall be 4" and shall be equal to or greater than the building storm drain diameter. Service laterals shall be built to the same construction standards and of the same materials as the storm drain mainline. Service laterals in general shall be placed at 90 degrees to the mainline to avoid excessive exposure to other utilities during excavation for construction or maintenance of the service lines. Angles other than 90º (45º minimum) may be approved for special conditions such as cul-de-sac lots. Service line connections may be made at manholes (90º to storm drain mainline) if such placement would not interfere with other present or future connections to the manhole.

The minimum slope of sewer service lines shall be 2.00% (¼ inch per foot), except for unusual conditions, when a slope of 1.00% (⅛ inch per foot) may be approved. It will be necessary,

however, for the Design Engineer to provide a complete analysis of the need for any storm drain service lateral slope less than 2.00%. The maximum slope shall be 100.00% (45º or 1 foot per foot). Deep connection risers (see the standard drawing for service laterals to deep storm drains) or drop connections to manholes must be used where service line slopes would exceed 100%.

Tees for service laterals shall be installed at 100% slope, and 1/16 or ⅛ bends installed to provide proper grade for service lateral. Service laterals shall be installed to end beyond the street right-of-way line or easement line where storm drain is installed in easement. A watertight plug shall be installed in end of lateral and a 2" x 4" wood marker shall be placed at lateral end from pipe invert to at least 36” above the finish grade. The 2" x 4" top shall be painted white and marked with the depth of the lateral measured from ground to invert of pipe.

Service laterals must be located a minimum of 15' from rail crossing gate arms outside of the rail crossing. The City may require a cleanout on a private service lateral if the lateral is under a major street or highway, under a light rail or other rail track, or adjacent to a major utility that limits the use of conventional open-cut excavation methods.

2.0040 STORMWATER DETENTION/RETENTION

2.0041 Development Not Requiring Detention

In general, all developments will be required to provide on-site detention, unless the developer can demonstrate by a hydraulic analysis that proposed development will not significantly increase stormwater runoff volumes or peak discharge.

However, pollution reduction facilities may still be required.

2.0042 Floodplain Information

Floodplain information, delineating the 100-year floodplain limits, shall be shown where it occurs within the development. Floodplain limits shall be based on maps prepared by the U.S. Army Corps of Engineers and the Federal Emergency Management Agency (FEMA). Where better information is available, it shall be used by the Design Engineer.

2.0043 Emergency Overflow

The Design Engineer shall assess the impacts of system failure for on-site detention. Overflow may occur due to rainfall intensity which exceeds the design storm, debris blockage of storm drain system, or some other reason.

The storm drain system shall be designed such that overflows do not cause inundation of neighboring properties. Potential overflow routes shall be adequately protected from erosion.

If surface detention (e.g., pond) is used, an overflow system shall be included to provide controlled discharge of the 100-year, 24-hour design storm event for developed conditions, without overtopping any part of the pond embankment or exceeding the capacity of the emergency spillway. The overflow design shall assume failure of the normal outlet control structure. An emergency spillway shall be able to safely pass all flows over the pond embankment without overtopping the embankment. Sufficient armoring will be required to the toe on each face of the embankment to prevent failure of the embankment from erosion.

2.0044 Detention Facilities

Detention volume storage methods, in order of preference, are the following.

1. Surface storage—pond
2. Underground storage by tank or vault will be approved by the City Engineer only when a pond is impracticable.

2.0045 Infiltration Facilities [Underground Injection Control (UIC)]

Infiltration facilities, also known as Underground Injection Control or UIC facilities (UICs) are governed by the Oregon Department of Environmental Quality (DEQ) pursuant to OAR 340-106-0001 and OAR 340-044-0005. Stormwater UICs include drywells, storm sumps, french drains, infiltration trenches and galleries, and other devices designed or intended to dispose of stormwater directly below the soil without the benefit of surface infiltration.

Any person seeking to install a UIC within the city of Milwaukie must first obtain a permit from the Building Department and pay all fees pertaining to such permits. The City of Milwaukie shall only issue permits for UICs that accept stormwater from footing drains and roof drains. All other UICs, including those that accept stormwater from any residential driveway, commercial parking lot, street, etc., must be registered and permitted or rule authorized by DEQ.

All newly constructed UICs, at the discretion of the City Engineer, shall be tested prior to paving in order to determine their in-place capacity. Testing of both new and existing drywells shall follow the procedure outlined below. **The City must be notified at least 24 hours prior to conducting the above test.** Only clean water shall be delivered to the sump or sedimentation manhole for testing. The introduction of silts, sediments, gravels, or any other foreign material shall not be permitted.

Step 1

Fill sump with water at an initial rate equivalent to the minimum required flow rate for the sump, or 300 GPM, whichever is less, and record the water surface elevation below the sump rim after 5 minutes. Maintain the initial flow rate, recording the water surface elevation every 5 minutes until the elevation stabilizes.

Step 2

After the water surface elevation stabilizes, increase the flow rate by 300 GPM and record the water elevation as in step 1.

Step 3

Repeat step 2 until one or more of the following criteria are met.

1. The sump has met the design capacity as determined by the City.
2. The sump has reached the maximum allowable capacity for a single drywell.
3. The sump has reached its actual in-place capacity.
4. The maximum flow rate from the water source has been reached.

(Note: The minimum peak inflow for a test to be considered valid shall be 600 GPM unless this exceeds the design capacity of the sump.)

Step 4

Cease discharge of water to the sump and record the water surface elevation every minute until the sump is empty or the water surface has remained constant for a period of 5 minutes.

Step 5

Provide the City with all recorded test data within 24 hours following the test.

Step 6

If, following analysis of the test data, the tested capacity of the drywell is less than the design capacity, inform the City immediately.

2.0050 WATER QUALITY FACILITIES

2.0051 Criteria for Requiring Construction of a Water Quality Facility

A water quality facility shall be constructed unless, in the judgment of the City Engineer, any of the following conditions exists:

1. The site topography or soils makes it impractical, or ineffective to construct an on-site facility.
2. The site is small compared to the development plan, and the loss of area for the on-site facility would preclude the effective development.
3. There is a more efficient and effective regional site within the subbasin that was designed to incorporate the development.
4. The development is for the construction of 1-or 2-family (duplex) dwellings on existing lots of record.

If construction of an on-site facility is not required, then the City Engineer may require that development to construct an off-site treatment facility that will treat an equal or greater volume of stormwater elsewhere within the city. It is the developments responsibility to acquire the land necessary offsite to construct the proposed facility and to provide proof to the City Engineer that land has been acquired prior to the Land Use Application being deemed complete by the City. If the City is not furnished with adequate proof of ownership, then the application will not be deemed complete.

In lieu of constructing a new facility, the City Engineer may permit a development to upgrade an existing public facility at their discretion.

2.0052 Plan Requirements

When construction of water quality facilities is required:

1. The application shall include a set of construction plans prepared by the Design Engineer that certifies the proposed water quality facilities have been designed in accordance with the criteria required in Subsection 2.0013 (Minimum Design Criteria).
2. A financial assurance, meeting the requirements of the community development code is provided for the construction of the water quality facility.
3. An operation and maintenance plan shall be prepared showing how the water quality facility is to be maintained.
4. A landscape plan shall be prepared for the proposed facility.
5. A list of recommendations by a Geotechnical Engineer may be required at the discretion of the City Engineer.

2.0053 Facility Design

All Water Quality Facilities shall meet the design requirements of the current City of Portland, Stormwater Management Manual, as amended and adopted by the City of Milwaukie.

2.0060 EROSION CONTROL

All development shall provide erosion prevention measures and sediment control practices during all phases of construction to prevent and restrict the discharge of sediments in accordance with Chapter 31 of the community development code and OAR 340-41-455(3).

2.0070 PRIVATE DRAINAGE SYSTEMS

2.0071 Subdivisions

When subdivision lots drain to the rear it may be necessary to provide a private drainage system in private easements. This system shall be for collection of roof drains, footing drains, and surface runoff. This system shall be designed to meet the Uniform Plumbing Code requirements.

2.0072 Subsurface Drainage

Subsurface drains (underdrains) shall be provided at the following locations:

1. Where existing springs and field tile intercepted during construction activity for other facilities; i.e., sewer, water, mains, street excavations, foundations, etc. Subsurface drains are not needed if the tile is removed.
2. Where high ground water exists or when it is necessary to reduce the piezometric surface to an acceptable level to prevent land slippage or underfloor flooding of buildings.

END OF SECTION

SECTION 3—SANITARY SEWER DESIGN STANDARDS

TABLE OF CONTENTS

3.0000 SANITARY SEWERS 1
3.0010 GENERAL DESIGN REQUIREMENTS 1
3.0011 Pipe Materials and Size 1
3.0012 Minimum Design Criteria 2
A. Velocity 2
B. Manning Equation 2
C. Pipe Coefficient 2
3.0020 ALIGNMENT AND COVER 2
3.0021 Right-of-Way Location 2
3.0022 Minimum Cover 2
3.0023 Separation with Waterlines 3
3.0024 Easements 3
3.0025 Relation to Watercourses 4
3.0026 Vicinity of Rail Lines 4
3.0030 STRUCTURES 4
3.0031 Manholes 4
3.0032 Cleanouts 4
3.0040 STRUCTURE DESIGN 5
3.0041 Manholes 5
3.0050 SERVICE LATERAL 6
3.0060 CONNECTION TO EXISTING SEWERS 7
3.1000 SEWAGE PUMP STATION DESIGN STANDARDS 7
3.1010 GENERAL 7
3.1020 DESIGN 7
3.1030 MATERIALS 8
3.1031 Pumps 8
3.1032 Piping and Valves 8
3.1033 Electrical 8
3.1034 Controls 8
3.1035 Alarms and Telemetry 8
3.1036 Landscaping and Fencing 8
3.1037 Additional Features 8
3.1038 Force Main 9
3.1040 CONSTRUCTION 9
3.1041 Design Codes 9
3.1042 Steel Fabrications 9
3.1043 Operating and Maintenance Data 9
3.1044 Spare Parts 9

3.0000 SANITARY SEWERS

3.0010 GENERAL DESIGN REQUIREMENTS

Performance Standards: Sanitary sewer system design shall meet the policies and guidelines of the adopted City of Milwaukie Sewer Master Plan and its updates.

Sanitary sewer systems shall be designed to provide gravity service to all areas of development unless approved by City Engineer as stated below.

Sanitary sewer system capacity shall be designed for ultimate development density of the tributary area. The system shall allow for future system extension and for future development.

Sanitary sewers shall be designed to remove the domestic sewage and industrial wastes from basements of houses, where practical, commercial or industrial buildings, and all public and private establishments where possible.

Storm water, including street, roof, or footing drainage, shall not be discharged into the sanitary sewer system but shall be removed by a system of storm drains or by some other method separate from the sanitary sewer system.

Unpolluted or noncontact cooling waters shall not be discharged into sanitary sewers. The overflow drains and filter backwash lines of swimming pools and "hot tubs" shall drain into a sanitary sewer.

In general, sewer systems shall be designed to allow for future loads and for ultimate development of the specific drainage area or basin concerned.

As a condition of sewer service, all developments will be required to provide public sewers to adjacent upstream parcels in order to provide for an orderly development of the drainage area. This shall include the extension of sewer mains in easements across the property to adjoining properties, and across the street frontage of the property to adjoining properties when the main is located in the street right-of-way. This shall include trunk sewers that are oversized to provide capacity for upstream development.

All sewer mainlines shall be located within the public right-of-way or public easement as directed by the City Engineer. These lines are placed in the public streets and right-of-way for ease of maintenance and access, control of the facility, operation of the facility, and to provide required replacement and/or repair.

Design shall comply with Oregon Department of Environmental Quality sewer design guidelines, OAR 340, and Division 52, and the requirements of Clackamas County Service District.

City Engineer approval will be required for any sanitary lift or pump stations.

3.0011 Pipe Materials and Size

All public sanitary sewers shall be constructed with PVC pipe or concrete pipe as specified in Division 3 (Sanitary Sewer Construction Standards) of the Milwaukie Public Works Standard Construction Specifications. Where required for added strength, Class 50 ductile-iron pipe will be used.

Private sanitary sewers shall meet the appropriate sections of the Uniform Plumbing Code.

All sanitary sewer main lines shall be a minimum diameter of 8". A 6" diameter sewer will be allowed with the City Engineer’s approval.

New and reconstructed light rail and freight rail construction may require improvements to the sanitary sewer system at utility crossing locations. All existing pipes or pipes on the second half of useful life within the rail zones shall be replaced to current standards. Metallic or conductive pipe materials are not approved pipe materials at rail crossings. Pipes are to be centered under rail tracks to avoid joints underneath rail lines. All new pipe installations must identify practical future replacement options for the sewer pipe under rails in case of future failure of utility. All pipes shall

be sized for full build-out and future flows. This sizing includes allowance for trenchless technologies. Where lining is anticipated, pipe size shall account for future lining thickness.

3.0012 Minimum Design Criteria

In general, sewer systems should be designed to care for future loads which may reasonably be expected within a period of 30 to 50 years, and for ultimate development of the specific drainage area concerned.

A. Velocity

All sanitary sewers shall be designed on a grade which produces a mean velocity, when flowing half-full or full, of no less than 2.5' per second. Where velocities greater than 15 fps are attained, special provisions shall be made to protect against displacement by erosion and shock. The minimum grades for the various sizes of pipe are as follows.

Inside Pipe Diameter (inches)	Grade (feet per 100 feet)
6	0.77
8	0.53
10	0.39
12	0.31
15	0.23
18	0.18
21	0.15
24	0.13
27	0.11
30	0.09
36	0.07

In general, slopes greater than those shown above are desirable and are particularly recommended on the upper ends of lateral sewers.

B. Manning Equation

When calculating minimum pipe slopes and velocities, the Design Engineer shall use the Manning pipe friction formula.

C. Pipe Coefficient

The minimum pipe roughness coefficient for sanitary sewers shall be 0.013.

3.0020 ALIGNMENT AND COVER

3.0021 Right-of-Way Location

Sanitary sewer lines shall be located in the street right-of-way, 5’ north and west of centerline whenever possible. All changes in direction of pipe shall be made at a manhole.

Sewers shall be located in the street right-of-way. If streets have curved alignments, the center of the manhole shall not be less than 6' from the curb face on the outside of the curve, nor the sewer centerline less than 6' from the curb face on the inside of the curve.

Curved alignments will not be permitted.

3.0022 Minimum Cover

All sanitary sewers shall be laid at a depth sufficient to drain building sewers, to protect against damage by frost or traffic, and to drain basement sewers, where practical. Sufficient depth shall mean the minimum cover from the top of the pipe to finish grade at the sewer alignment. In new residential hillside subdivisions, mainline and lateral sewers shall be placed in the street at a depth sufficient to drain building sewers on the low side of the street.

Sanitary sewers in residential areas shall be placed in the street with the following minimum cover.

Building service lateral:	6'
Trunk and collector sewer:	
in the roadway:	8'
in easements:	8'

Where the topography is relatively flat and existing sewers are shallow (5' or less) the minimum cover shall be 3'. Where required for additional strength when cover is minimal, ductile-iron pipe and/or CDF backfill meeting the requirements of the Milwaukie Public Works Standard Construction Specifications may be required by the City Engineer. Minimum cover for rail crossings is 5'.

Deviation from the above standards will be considered on a case-by-case basis when one of the following circumstances exists.

1. Underlying rock strata—required: A request in writing to the City Engineer, together with submittal of a soils report, with a plan and profile certifying that bed rock exists 3' below the undisturbed ground surface at all investigated alignments.

2. A ditch or stream must be crossed—required: A plan and profile; horizontal scale 1" = 20', vertical scale 1" = 2'.

3.0023 Separation with Waterlines

Water mains shall be installed a minimum clear distance of 10' horizontally from sanitary sewers and shall be installed to go over the top of such sewers with a minimum of 18 inches of clearance at intersections of these pipes (in accordance with the requirements of OAR Chapter 333, Public Water Systems). Exceptions shall first be approved by the City Engineer. In all instances the distances shall be measured edge to edge. The minimum spacing between water mains and storm drains, gas lines, and other underground utilities, excepting sanitary sewers, shall be 3' horizontally when the standard utility location cannot be maintained.

Where water mains are being designed for installation parallel with other water mains, utility pipe, or conduit lines, the vertical location shall be 12" below (or in such a manner which will permit future side connections of mains, hydrants, or services) and avoid conflicts with parallel utilities without abrupt changes in vertical grade of the above mentioned main, hydrant, or service. Where crossing of utilities are required; the minimum vertical clearance shall be 6".

3.0024 Easements

Sewers placed in easements along a property line shall have the easement centered on the property line and the sewer shall be offset 18 inches from the property lines. For sewers placed in easements located other than along a property line, the sewer shall be placed in the center of the easement. The conditions of the easement shall be such that the easement shall not be used for any purpose which would interfere with the unrestricted use for sewer main purposes. Under no circumstances shall a building or structure be placed over a sanitary sewer main or sewer easement. This shall include overhanging structures with footings located outside the easement.

Easements for sewers less than 12 inches in diameter shall have a minimum width of 15'. Sewers greater than 12 inches in diameter shall have a minimum easement width of 20 feet. In some instances larger width easements may be required, such as excessively deep pipes or location of a building near the easement.

Easement locations for public sewer mains serving a PUD, apartment complex, or commercial/industrial development shall be in parking lots, private drives, or similar open areas which will permit an unobstructed vehicle access for maintenance by City personnel.

All easements must be furnished to the City Engineer for review and approval prior to recording. Easements shall state that the City will not in any way be responsible for replacing landscaping

including any shrubs or trees, fencing, or other structures that may exist or have been placed in the easement.

3.0025 Relation to Watercourses

Generally, the top of all sanitary sewers entering, crossing or adjacent to streams shall be at a sufficient depth below the natural bottom of the streambed to protect the sewer line. 1' of cover is required where the sewer is in rock; 3' of cover is required in other materials. In paved channels, the top of the sewer line shall be placed at least 6" below finish grade of the bottom of the channel, except as provided above.

Sewers located along streams shall be located outside of the streambed and sufficiently removed therefrom to provide for future, possible stream channel widening. All manhole covers shall be watertight at or below the 100-year flood elevation.

Sewers crossing streams or drainage channels shall be designed to cross the stream as nearly perpendicular to the stream channel as possible, and shall be free from change of grade. The minimum cover shall be 36 inches from the bottom of the streambed or drainage channel.

Pipe material shall be ductile iron with an 18-foot length of pipe centered on the stream or drainage channel centerline. The ductile-iron pipe shall extend to a point where a 1-to-1 slope begins at the top of the bank and slopes down from the bank away from the channel centerline and intersects the top of the pipe.

Concrete encasement will be required when the above cover requirements cannot be met. Each deviation from the above requirements will be reviewed on a case-by-case basis.

3.0026 Vicinity of Rail Lines

At a utility crossing of a rail line, center pipe sections to avoid joints underneath the rail line. All accessible structures must be located a minimum of 15' from the gate arms outside of the rail crossings. No service laterals are allowed within this described area.

3.0030 STRUCTURES

3.0031 Manholes

Manholes shall conform to ASTM C-478.

Manholes shall be located at all changes in slope, alignment, pipe size, and at all pipe junctions with present or future sanitary sewers.

Manhole spacing shall not be greater than 400 feet. Spacing may be increased in special circumstances with City Engineer approval.

Manholes outside of vehicle or pedestrian travelways shall have a tamper proof lid.

3.0032 Cleanouts

Cleanouts will not be approved as substitutes for manholes on public sewer lines. Cleanouts are permitted at the upper end of a sewer that will be extended during a future construction phase. If future extension requires a change in sewer alignment or grade, a manhole will be required at the cleanout location.

Cleanouts are permitted at the end of a nonextendable sewer line that does not exceed 150 feet in length nor serve more than 8 lots.

Cleanouts located outside of vehicle or pedestrian travel ways shall be encased by a 2” A/C pad of pavement in a 4’ diameter circle centered on the lid.

3.0040 STRUCTURE DESIGN

3.0041 Manholes

Designs for manholes are shown in the Milwaukie standard drawings. They are suitable for most conditions.

All sanitary manholes shall be of watertight construction. If ground water or surface drainage can be expected, watertight covers shall be used.

New designs or revisions should not be shown on the construction drawings unless the standard designs are not suitable. New or revised designs may be necessary if:

1. 1 or more of the sewers to be connected to the manhole is over 36 inches in diameter (smaller diameters may require a special design if the manhole is at an alignment change.)
2. Several sewers will be connected to the manhole.
3. There is less than 90 degrees between the incoming and outgoing sewer.
4. The manhole will be subject to unusual structural loads.
5. Diversion or other flow control measures are required.

Where 1 or more of conditions a), b), or c) are encountered, a drawing of the manhole base should be made to determine if it is feasible to use designs shown in the standard drawings. It may be necessary to restrict the options to a specific standard drawing specified by a note on the construction drawings. If a special design is required for any reason, it will be necessary to show the details on the construction drawings and to provide structural calculations as needed.

Some alternate manhole features are shown in the standard drawings. Where these features are required, they must be specified by a note on the construction drawings. Some examples are:

1. Slab tops must be used in lieu of cones where there will be less than 4 feet between the manhole shelf and the top of the manhole lid.
2. Watertight manhole frames and covers are to be used if floodwaters are expected to cover the manhole top or if the manhole must be located in the street gutter. Such conditions should be avoided wherever feasible.
3. Tamperproof manhole frames (7" depth) and covers are required in all areas outside the paved public right-of-way or pedestrian travel ways. Rims shall be 1’ above the finished grade if not in a paved way.

Standards for elevation differences at manholes have been established to compensate for normal energy losses and to prevent surcharging of a sewer by a larger sewer. For purposes of slope calculation and for establishing elevation differences, the elevations are given at the intersection of the sewer centerlines (usually the center of the manhole). The rules for elevation differences at manholes are:

1. The crowns of incoming sewers shall be at least as high as the crown of the outgoing sewer.
2. If the incoming and outgoing sewers are of equal size and are passing straight through the manhole, no added elevation change is required.
3. If sewers intersect or the alignment changes at the manhole, the invert elevation difference shall be at least 0.10 feet for 0°-45° of horizontal deflection angle, and 0.20 feet for over 45° of horizontal deflection angle.

4. The slope of a sewer within a manhole shall be no less than the slope of the same sewer outside of the manhole.

5. Drop connections are required when the vertical distance between flow lines exceeds 2 feet. The diameter of the drop connection must be specified on the construction drawings. The diameter of the drop connection shall not be more than 1 pipe size smaller than the diameter of the incoming sewer. Smooth flow lines with vertical distances of less than 1 foot must be provided wherever feasible. Outside drop assemblies only, will be permitted, see the standard drawings.

6. All connections must enter the manhole through a channel in the base. This includes drop connections and connections to existing manholes.

Where conditions make compliance with these rules impractical, exceptions will be permitted. It will be necessary, however, for the Design Engineer to provide a complete analysis of the need for such designs.

3.0050 SERVICE LATERAL

Service laterals are those private sewer lines to which a private building sewer connects.

Each individual building site shall be connected by a separate, private, building-sewer-service line connected to the public sewer. Each individual property shall have an individual lateral.

Where the invert of the lateral is one foot or less above the manhole shelf, formed channel will be constructed utilizing Portland Cement concrete. The sewage entering the manhole will follow a smooth concrete channel transitioning evenly from the invert of the inlet pipe into main channel. Sewage will not be allowed to fall freely to the manhole base.

The minimum inside diameter of a sewer service lateral shall be 4" and shall be equal to or greater than the building sewer diameter. Service laterals shall be built to the same construction standards and of the same materials as the sewer mainline. Service laterals in general shall be placed at 90º to the main sewer line to avoid excessive exposure to other utilities during excavation for construction or maintenance of the service lines. Angles other than 90º (45º minimum) may be approved for special conditions such as cul-de-sac lots. Service line connections may be made at manholes (90º to sewer mainline) if such placement would not interfere with other present or future connections to the manhole.

The minimum slope of sewer service lines shall be 2% (¼ inch per foot), except for unusual conditions, when a slope of 1% (⅛ inch per foot) may be approved. It will be necessary, however, for the Design Engineer to provide a complete analysis of the need for any sewer service lateral slope less than 2%. The maximum slope shall be 100% (45º or 1 foot per foot). Deep connection risers (see the standard drawing for service laterals to deep sewers) or drop connections to manholes must be used where service line slopes would exceed 100%.

Tees for service laterals shall be installed at 100% slope, and 1/16 or 1/8 bends installed to provide proper grade for service lateral. Service laterals shall be installed to end beyond the street right-of-way line or easement line where sewer is installed in easement. A watertight plug shall be installed in end of lateral and a 2" x 4" wood marker shall be placed at lateral end from pipe invert to at least 36” above the finish grade. The 2" x 4" top shall be painted green and marked with the depth of the lateral measured from ground to invert of pipe. In new subdivisions, at the time the curbs are poured, an "S" shall be stamped in the top of the curb at each point a lateral crosses beneath the curbline.

The City may require a cleanout on a private sewer lateral when circumstances justify its use; specifically if the lateral is under a major street or highway, under a light rail or other rail track, or adjacent to a major utility that limits using a conventional open-cut excavation method.

3.0060 CONNECTION TO EXISTING SEWERS

Connections to, and extensions of, existing sewers will occur to facilitate new development. Certain requirements will be placed on the Design Engineer as to permitted methods and/or locations.

Connections to existing manholes shall be made with the following guidelines.

1. Where the invert of the connecting pipe is more than 2 feet above the manhole shelf, the Contractor will be required to construct an outside drop with the inlet pipe invert being located at the manhole shelf. The sewage entering the manhole will follow a smooth concrete channel transition from the inlet pipe into the main channel.
2. Where the invert is required to enter below the shelf of the manhole, the inlet pipe will not enter below a point where the crown of the new inlet pipe is below the crown of the outlet pipe. The base of the manhole will be rebuilt if damaged in this process. The sewage will enter the main flow in a smooth channel transitioning from the inlet pipe to the main channel.
3. No pipe will enter an existing manhole where the angle between the incoming flow and the outgoing flow is greater than 90°.

When sewers are extended from cleanouts, the entire cleanout assembly, including the wye, shall be removed.

New building service laterals will be made at existing tees where possible.

When tees do not exist on the Public Sanitary Sewer System, the new lateral sewer will enter the collection system through a "cored" opening with an approved connector. This connection shall be done in conformance with standard drawing 308.

New and reconstructed light rail and freight rail construction may require improvements to the existing sanitary sewer system at utility crossing locations. All existing clay pipes or pipes on the second half of useful life within the rail zones must be replaced to current standards. Existing metallic or conductive pipe materials are not approved pipe materials at rail crossings and must be replaced to current standards.

3.1000 SEWAGE PUMP STATION DESIGN STANDARDS

3.1010 GENERAL

The pump station shall be a submersible pump type facility.

Station shall include: submersible pumps, wet well, valve vault, associated piping and valves, electrical controls, instrumentation, telemetry, access road, fencing, landscaping, potable water supply, and shall generally conform to the City of Milwaukie conceptual pump station.

Pump station shall be designed to pump the peak wastewater flow from the service area. When the service area is not built out, staging of pump station capacity will be allowed.

Where the flow is substantial or where environmental damage may occur due to power failure, the City Engineer may require permanent standby power.

Wet well-mounted or wet well/dry well stations will not be allowed.

3.1020 DESIGN

Pump station shall be designed to meet the minimum requirements and guidelines standards of the Department of Environmental Quality (DEQ), OAR Chapter 340, Division 52.

Design shall be by registered engineer experienced in design of such facilities.

Service area, peak flow, and pump station calculations shall be submitted to the City Engineer.

Wet well shall be designed to provide 4 hours of storage above high water alarm.

3.1030 MATERIALS

3.1031 Pumps

A minimum of 2 pumps shall be supplied. Each pump shall be capable of pumping the peak wastewater flow. Where more than 2 pumps are used, the station shall be able to pump peak wastewater flow when the largest pump is out of service.

Pumps shall be submersible pumps manufactured by Hydronix (or equal), explosion-proof, suitable for hazardous location, and shall be UL or FM listed.

3.1032 Piping and Valves

Piping and fittings shall be ductile iron.

Valves shall be metal, suitable for wastewater use. Valves shall be designed for wastewater service.

Provide pressure gages on pump discharge piping.

3.1033 Electrical

Electrical controls shall be located above ground mounted in a waterproof enclosure. Electrical panels shall be UL listed. The pump station wet well shall be considered a hazardous location.

3.1034 Controls

Controls may be mechanical relays or programmable logic controllers.

Pumps shall alternate lead-lag position with each pumping cycle.

Bubbler shall control pump start/stop.

Float activated alarm shall indicate high water level.

An auxiliary power connector and manual transfer switch shall be provided.

3.1035 Alarms and Telemetry

Alarms shall be telemetered to the City of Milwaukie Public Works Open Complex radio.

Alarms include:
Pump failure
Power failure
Telemetry failure
High water level
Bypass

3.1036 Landscaping and Fencing

A 6-foot chain link fence with 3 strands of barbed wire and redwood slats shall surround the pump station. Access for easy maintenance shall be incorporated in the design.

3.1037 Additional Features

Provide 1-inch hose bib at valve vault. Potable water shall be provided by reduced pressure backflow preventer.

Provide positive ventilation in valve vault.

Odor control as required.

3.1038 Force Main

Force main shall be designed for a nominal flow velocity in the range of 3 to 5 feet per second.

3.1040 CONSTRUCTION

3.1041 Design Codes

Pump station and related facilities will be constructed to Electrical and Building Codes.

3.1042 Steel Fabrications

Steel fabrications shall be hot dipped galvanized; painting required on valves, piping, and pipe fittings.

3.1043 Operating and Maintenance Data

Compile product data and related information appropriate for City's maintenance and operation of products furnished under the Contract.

Prepare operating and maintenance manual.

Instruct City's personnel in the maintenance of products and in the operation of equipment and systems.

3.1044 Spare Parts

Supply 2 sets each of all gaskets, bearings, and mechanical seals for rotating equipment.

END OF SECTION

SECTION 4—WATER DESIGN STANDARDS

TABLE OF CONTENTS

4.0000 WATER MAINS 1

4.0010 GENERAL DESIGN REQUIREMENTS 1

4.0011 Pipe Materials and Size 1

4.0012 Grid System 2

4.0013 Dead-End Mains 2

4.0014 Restrained Joints 2

4.0020 ALIGNMENT AND COVER 2

4.0021 Right-of-Way Location 2

4.0022 Minimum Cover 2

4.0023 Separation with Sewer Lines 3

4.0024 Easements 3

4.0025 Relation to Watercourses 3

A. Above Water Crossings 3

B. Underwater Crossings 4

4.0030 APPURTENANCES 4

4.0031 Valves 4

4.0032 Fire Hydrants 4

4.0033 Pressure-Reducing and Air Release Valves 5

4.0034 Railroad or Freeway Crossings 5

4.0040 BACKFLOW PREVENTION 5

4.0050 WATER SERVICE LINES 6

4.0051 Fire Service 6

4.0052 Fire Vaults 6

4.0060 SYSTEM TESTING 6

4.0070 WATER QUALITY SAMPLING STATIONS 6

4.0000 WATER MAINS

4.0010 GENERAL DESIGN REQUIREMENTS

Performance Standards: Water distribution systems shall be designed to meet State Water Administrative Rules, AWWA Standards, and guidelines of these Design Standards.

Water system design shall provide adequate flow for fire protection and maximum water usage and consumption. Required water system demands shall be met by maintaining the minimum operating pressures required by the City. For single-family residential areas the minimum static pressure shall be 35 PSI, and the minimum fire flow shall be 1,000 GPM. For all other developments, the required fire flow shall be as determined by the Fire Chief.

Water system design shall meet distribution needs for maximum water usage and consumption within a given pressure zone. New water systems shall allow for future extensions beyond present development.

When water systems are designed where velocities are greater than 5 fps, special provisions shall be made to protect against displacement by erosion and shock.

All waterlines shall be located within the public right-of-way or as directed by the City Engineer. These lines are placed in the public right-of-way for ease of maintenance and access, control of the facility, operation of the facility, and to permit required replacement and/or repair. The City Engineer, under special conditions, may allow a public waterline to be located within a public water easement as referenced in Subsection 4.0024 (Easements).

4.0011 Pipe Materials and Size

All public water distribution systems shall be constructed with ductile-iron pipe. All such pipe shall be cement mortar-lined pipe with push-on or mechanical type joints. When a corrosive potential condition is encountered, all ductile-iron pipe and fittings will be polyethylene encased with an 8 mil tubing meeting manufacturer and AWWA standards. Where an active cathodic protection system is encountered as a result of other utilities, a deviation from the normal pipe design/material/installation practice may be required by the City Engineer.

All pipe, valves and fittings shall be pressure rated for 250 or 350 PSI. All fittings shall be factory cement lined and coated. Pipe constructed per Subsection 4.0025 (Relation to Watercourses) will require the use of restrained pipe joints or ball and socket river pipe.

Water distribution main sizes shall generally conform to the following.

4-inch: May only be used with approval of the City Engineer in residential zones on dead-end streets with a center line distance of less than 250 feet measured from the center of the intersecting street to the radius point of the cul-de-sac; with service to not more than 12 residences; and shall be connected to a looped minimum 6-inch main. Fire hydrants are not permitted on four-inch lines. All 4-inch lines shall terminate with a standard blowoff (standard drawing 403.)

6-inch: Minimum size residential subdivision distribution water main for the grid (looped) system, not to exceed an unsupported length of 600 feet and shall not be permanently dead-ended. Looping of the distribution grid shall be at least every 600 feet.

8-inch: Minimum size for permanently dead-ended mains supplying fire hydrants with a fire flow less than 1,500 GPM and for primary feeder mains in residential subdivisions.

10 inches and Up: As required for primary feeder lines in subdivisions, industrial, larger, and commercial areas.

Velocity in distribution mains shall be designed not to exceed 5' per second. Velocity in service lines, as defined in Subsection 4.0050 (Water Service Lines), shall not exceed 10' per second. Standard trench section (standard drawing 516) will be utilized for all water pipe installed.

New construction and reconstruction of light rail and freight rail may require improvements to the water system at utility crossing locations. Existing pipes in the second half of their useful life within the rail zones must be replaced to current standards. Metallic or conductive pipe materials are not approved pipe materials at light rail crossings.

All waterlines are to be encased through rail line crossings. Each casing pipe segment is to be positioned under rail tracks to avoid joints underneath rail lines. Metallic or conductive pipe materials are not approved at rail crossings (including pipes used as encasement conduit)..

4.0012 Grid System

The distribution system mains shall be looped at all possible locations. All developments will be required to extend mains across existing or proposed streets for future extensions of other developments within the city. All terminations shall be planned and located such that new or existing pavement will not have to be cut in the future when the main is extended. The installation of permanent dead-end mains greater than 250 feet, upon which fire protection depends and the dependence of relatively large areas on single mains, will not be permitted.

4.0013 Dead-End Mains

Dead-end mains which will be extended in the future shall be provided with a properly sized blowoff (see standard drawings 403).

Permanent dead-end mains shall terminate with a standard blowoff assembly (see standard drawings 403).

4.0014 Restrained Joints

Restrained joints shall be required for transmission pipelines which cross unstable land, railroad tracks, freeways, watercourses, or other locations which could either result in unusual ground movements or could result in significant damage to property or life should a leak occur.

4.0020 ALIGNMENT AND COVER

4.0021 Right-of-Way Location

Water systems shall be located south and east from the right-of-way centerline or as directed by the Engineer. Generally, the waterline will be located 4’ from curbline or edge of pavement. Except as provided in Subsection 4.0024 (Easements), all waterlines shall be in the public right-of-way. All abrupt changes in vertical or horizontal alignment shall be made with a fitting and a concrete thrust block. (Refer to standard drawing 405).

Curved alignment for waterlines or mains is permitted and shall follow the street centerline when practical. The minimum allowed radius shall be based on allowable pipe deflection for the pipe diameter and the pipe laying length, but not to exceed 3° joint deflection.

4.0022 Minimum Cover

The standard minimum cover over buried water mains within the street right-of-way shall be 36" from finish grade.

The minimum cover for mains in easements across private property shall be 48" from finish grade.

Finish grade shall normally mean the existing or proposed pavement elevation. Where the main is located in the cut or fill side slope or where mains are located in easements, finish grade shall mean final ground elevation at the water main alignment.

4.0023 Separation with Sewer Lines

Water mains shall be installed a minimum clear distance of 10' horizontally from sanitary sewers, and shall be installed to go over the top of such sewers with a minimum of 18 inches of clearance at intersections of these pipes. When physical conditions render this spacing impossible or impractical, then cast-iron water pipe with watertight joints or concrete encasements is required for the sewer line. Wherever it is necessary for sewer and water lines to cross each other, the crossing should be at an angle of approximately 90 degrees and the sewer shall either be located 18 inches or more below the water line or be constructed of cast-iron water pipe with watertight joints for a distance of 9 feet on both sides of the water line. Exceptions shall first be approved by the City Engineer. In all instances, the distances shall be measured edge to edge. The minimum spacing between water mains and storm drains, gas lines, and other underground utilities, excepting sanitary sewers, shall be 3' horizontally when the standard utility location cannot be maintained (Refer to standard drawing 407).

Where water mains are being designed for installation parallel with other water mains, utility pipe, or conduit lines, the vertical separation shall be 12" below or in such a manner which will permit future side connections of mains, hydrants, or services, and avoid conflicts with parallel utilities without abrupt changes in vertical grade of the above mentioned main, hydrant, or service. Where crossing of utilities are required, the minimum vertical clearance shall be 6".

4.0024 Easements

Mains placed in easements along a property line, shall have easements centered on the property line and shall be offset 18 inches from the property line. Mains placed in easements along a right-of-way line shall be offset a minimum 3 feet from the right-of-way line and within a minimum 10-foot-wide easement. For mains placed in easements located other than along a property or right-of-way line, the main shall be placed in the center of the easement. Easements, when required, shall be exclusive and a minimum of 15' in width. The conditions of the easement shall be such that the easement shall not be used for any purpose which would interfere with the unrestricted use for water main purposes. Under no circumstances shall a building or structure be placed over a water main or water main easement. This includes overhanging structures with footings located outside the easement.

Easement locations for public mains serving a PUD, apartment complex, or commercial/industrial development shall be in parking lots, private drives, or similar open areas which will permit unobstructed vehicle access for maintenance by City personnel.

Any water main placed within a water main easement shall be marked with permanent posts and metal signs at all angle points and line or sight of joints. In addition, such posts and signs shall be placed where the waterline intersects the public right of way at the easement location. A monument cap set in the pavement of parking lots shall be an acceptable alternative to the sign. The City shall provide wording for the sign/monument.

All easements must be furnished to the City Engineer for review and approval prior to recording. Easements shall state that the City will not in any way be responsible for replacing landscaping including any shrubs or trees, fencing, or other structures that may exist or have been placed in the easement.

4.0025 Relation to Watercourses

New water mains may cross over or under existing streams, ponds, rivers, or other bodies of water.

A. Above Water Crossings

The pipe shall be engineered to provide support, anchorage, and protection from freezing and damage, yet shall remain accessible for repair and maintenance. All above water crossings will require review and approval by the City Engineer.

B. Underwater Crossings

1. Mains crossing stream or drainage channels shall be designed to cross as nearly perpendicular to the channel as possible.
2. Valves shall be provided at both ends of the water crossing so that the section can be isolated for testing or repair. The valves shall be easily accessible and not subject to flooding. The valve nearest to the supply source shall be in a manhole. Permanent taps shall be made on each side of the valve within the manhole to allow insertion of a small meter for testing, to determine leakage, and for sampling.
3. The following surface water crossings will be treated on a case-by-case basis.
   a. Stream or drainage channel crossing for pipes 12" inside diameter and greater.
   b. River or creek crossings requiring special approval from the Division of State Lands.
4. The minimum cover from the bottom of the streambed or drainage channel to the top of pipe shall be 36".
5. A scour pad centered on the waterline will be required for mains less than 12" inside diameter when the cover from the top of the pipe to the bottom of the streambed or drainage channel is 30" or less. The scour pad shall be concrete, 6" thick over and under the pipe and 6' wide; reinforced with number 4 bars 12" on center both ways; and shall extend to a point where a 1-to-1 slope begins at the top of the bank and slopes down from the bank away from channel centerline and intersects the top of the pipe.

4.0030 APPURTENANCES

4.0031 Valves

In general, valves shall be the same size as the mains in which they are installed. Valve types and materials shall conform to the Standard Construction Specifications.

Distribution system valves shall be located at the tee or cross fitting. There shall be a sufficient number of valves so located that not more than 4, and preferably 3 valves, must be operated to effect any 1 particular shutdown. The spacing of valves shall be such that the length of any 1 shutdown in commercial or industrial areas shall not exceed 500 feet nor 800 feet in other areas.

Valves shall be installed at each cross, tee, or any tap 2 inches or greater in diameter connected to the main line. In general, intersections shall be valved in at least 2 branches and cross-intersections shall be valved at all branches. Transmission water mains shall have valves at not more than 1,000-foot spacings. Hazardous crossings such as creeks, railroad and freeway crossings, shall be valved on each side.

Distribution tees and crosses for future branch lines on transmission mains may be required at the direction of the City Engineer.

4.0032 Fire Hydrants

The public fire hydrant system shall be designed to provide adequate flow as required. The distribution system shall be designed in commercial/industrial areas to accommodate fire flows up to 1,500 GPM. Minimum fire flow in single-family residential areas shall be 1,000 GPM.

The distribution of hydrants shall be based upon the required average fire flow for the area served. Design coverage shall result in hydrant spacing of approximately 400 feet in residential areas, approximately 300 feet in commercial or industrial subdivisions, or as approved by the Fire

Chief and City Engineer. In addition, sufficient hydrants shall be available within 1,000 feet of a building in commercial/industrial areas to provide its required fire flow.

Residential hydrants shall be located as nearly as possible to the corner of street intersections and not more than 400 feet from any cul-de-sac radius point.

No fire hydrant shall be installed on a main of less than 8" inside diameter unless it is in a looped system of 6" mains. The hydrant lead shall be a minimum 6" inside diameter.

All fire hydrants will be located behind the existing or proposed sidewalk or in the planter strip. Hydrants shall be placed as to not interfere with driveways and curb ramps. If any public hydrant encroaches on private property, an easement will be provided as directed by the City Engineer.

No hydrant shall be installed within 5' of any existing aboveground utility and there shall not be any utility facilities installed closer than 5' from an existing hydrant.

Hydrant installation shall conform to standard drawing 400. Full-depth hydrants will be required in all installations. Installation of hydrant extensions will not be allowed, unless approved by the City Engineer.

Each fire hydrant shall have an auxiliary valve and valve box which will permit repair of the hydrant without shutting down the main supplying to the hydrant. Such auxiliary valves shall be resilient wedge gate valves. The auxiliary valve shall have mechanical joint-flange joint ends as referenced in the standard drawing 400. The valve shall be connected directly to the water main using a flange joint tee, tie rods, megalug, and thrust blocked.

Hydrants shall not be located within 20' of any building, and shall not be blocked by parking. The large hydrant port should face the road or travelway.

Guard posts, a minimum of 3' high, shall be required for protection from vehicles when necessary. Such protection shall consist of 4" diameter steel pipes, 6' long, filled with concrete, and buried a minimum of 3 feet deep in concrete, and located at the corners of a 6-foot square with the hydrant located in the center. Use of posts other than at the 4 corners may be approved by the City Engineer.

4.0033 Pressure-Reducing and Air Release Valves

The City's water distribution system is divided into several pressure zones. Where water systems cross these zone lines, a pressure-reducing valve station will be required. The specific design and location for such valves will be reviewed and approved by the City Engineer.

When designated by the City Engineer, air release valves, per standard drawing 404, shall be installed. Such valves will be required on large diameter lines at all high points in grade.

4.0034 Railroad or Freeway Crossings

All such crossings defined above, or as determined by the City to be of a hazardous nature, shall be valved on both sides of the crossing. Casing of railroad or freeway crossings shall be as noted in the permit from the respective agency and as approved by the City. Waterlines and casing materials shall be designed to minimize the cathodic protection required. All accessible structures shall be located a minimum of 15 feet from railroad crossing gate arms outside of the rail area, at least 25 feet from a light rail track centerline, and 50 feet from the rail track centerline for freight and higher speed trains. Pipes shall be sized per master plan and full build-out requirements at all rail crossings. Materials to be approved by City Engineer.

4.0040 BACKFLOW PREVENTION

Backflow prevention devices shall be required on all 1½" and larger water services.

4.0050 WATER SERVICE LINES

The sizes of water service lines which may be used are 1", 2", 4", 6", 8", 10", and 12". Water service lines will be reviewed for effects on the distribution system and shall not be greater in size than the distribution main.

For 2" and greater services, a design drawing must be submitted showing the vault and fitting requirements with the expected flow (normal and maximum day flow) requirements and proposed usage.

Domestic service lines 1" through 2" shall normally extend from the main to behind the curb, with a meter curb stop and meter box located at the termination of the service connection (standard drawings 401 and 402). Meter to be provided and installed by City. Meter boxes are to be provided by the developer. In general, individual service connections shall terminate in front of the property to be served and shall be located 18 inches each side of a common side property line.

When a corrosive potential condition is encountered and the copper service passes over or under an active cathodic protection system, the service will be installed in a Schedule 40 PVC conduit for a distance of 10 feet on each side of the active system. All conduit placements will be as-built.

4.0051 Fire Service

There are 4 categories of private fire services: 1) hydrants, 2) fire sprinkler lines, 3) combination hydrant and fire sprinkler lines, and 4) combination plumbing and fire sprinkler heads.

The water fire service line shall normally extend from the main to the property line and end with a vault metering device and valves. An approved backflow prevention device will be required of the property being served.

4.0052 Fire Vaults

A vault will be required when a development provides fire sprinklers. The vault drawing will be included on construction drawings submitted to the City Engineer. The vault shall contain all valves, fittings, meters, and appurtenances required for fire service to the development.

4.0060 SYSTEM TESTING

All new water systems (lines, valves, hydrants, and services) shall be individually pressure tested, chlorinated, and tested for bacteria. All testing shall be performed in accordance with Division 4 (Water Construction Standards) of the Standard Construction Specifications and in the presence of a City Inspector.

4.0070 WATER QUALITY SAMPLING STATIONS

Water sampling stations will be required as directed by the City Engineer.

END OF SECTION

SECTION 5—STREET DESIGN STANDARDS

TABLE OF CONTENTS

5.0000 STREETS 1

5.0010 GENERAL DESIGN REQUIREMENTS 1

5.0011 Right-of-Way and Pavement Width 1

5.0012 Access 1

5.0013 Transportation Impact Study 1

A. Determining When a Transportation Impact Study is Required 1

B. Transportation Impact Study General Provisions 2

C. Transportation Impact Study Requirements 2

D. Transportation Impact Study Mitigation 3

5.0014 Intersections 3

5.0015 Half-Street Plus Travel Lane Construction 3

5.0016 Street Classification 4

5.0017 Design Speed 4

5.0020 HORIZONTAL/VERTICAL CURVES, AND GRADES 4

5.0021 Horizontal Curves 4

5.0022 Vertical Curves 5

5.0023 Grades 5

5.0030 STREET DESIGN STANDARDS 5

5.0040 PAVEMENT DESIGN 7

5.0050 CONCRETE CURB 7

5.0051 Curb Return Radius 7

5.0060 SIDEWALKS 8

5.0061 Sidewalk Ramps 8

5.0070 BIKEWAYS 8

5.0071 Bikeway Facilities Required 8

5.0072 Design Criteria 8

5.0073 Construction 9

5.0080 ACCESSWAYS 9

5.0081 Accessway Spacing 9

5.0082 Accessway Location 10

5.0083 Number of Accessway Locations 10

5.0084 Accessway Design 11

5.0085 Accessway Size 11

5.0090 STREET LIGHTING, TREES, NAMES AND SIGNAGE 12

5.0091 Street Lighting 12

5.0092 Street Names, Traffic Control Signage, and Pavement Markings 12

5.0100 DEAD-END STREETS AND CUL-DE-SACS 13

5.0110 PRIVATE STREETS/ALLEYS 13
5.0111 Alleys 13
A. Commercial and Industrial 13
B. Residential Districts 13
5.0112 Private Residential Accessways 13
5.0120 LOCAL STREET DESIGN FOR ADVERSE TOPOGRAPHY 14
5.0130 MEDIANS 14
5.0140 GUARDRAILS 14
5.0150 PAVEMENT TRANSITIONS 14
5.0160 FENCES 15
5.0170 RAIL CROSSINGS 15
5.0171 Regulations 15
5.0172 Design Requirements 15
5.0180 TRAFFIC CALMING 15
5.0190 DOWNTOWN STREETS 16
5.0191 Street Design 16
A. Mid Block Parking Lot/Structure Access 16
B. Corner Radii 16
C. Landscape Requirements 16
D. Street lights 16
E. Street furniture elements 17
F. Bicycle Facility Details 18

5.0000 STREETS

5.0010 GENERAL DESIGN REQUIREMENTS

Performance Standards: All street designs shall provide for the safe and efficient travel of the public. Streets shall be designed to carry the recommended traffic volumes identified for each street classification.

Streets shall be designed to meet or exceed minimum guidelines. These guidelines are set forth in the "AASHTO Policy on Geometric Design of Highways and Streets" (latest edition). Traffic Control Devices shall conform to the "Manual on Uniform Traffic Control Devices for Streets and Highways", Federal Highway Administration, with Oregon Supplements, Oregon Department of Transportation (latest edition). Streets located within downtown Milwaukie shall be designed in accordance with the Milwaukie Downtown and Riverfront Plan Public Area Requirements (latest edition) and these standards.

All vertical and horizontal curves shall meet the guidelines of the AASHTO Policy on Geometric Design of Highways and Streets and the design speed for each street classification. Where practical, the Design Engineer shall provide the decision stopping sight distance set forth in the AASHTO policy. But in no case shall less than the minimum stopping sight distance given be permitted.

5.0011 Right-of-Way and Pavement Width

Right-of-way and pavement width for each street classification shall be as set forth in other sections of these Design Standards.

5.0012 Access

All development shall be provided public street access. Access roads (public and/or private), driveways, and easements shall be as set forth in other sections of these Design Standards.

5.0013 Transportation Impact Study

A Transportation Impact Study (TIS) documents the adequacy of the transportation system to serve the multiple modes of travel including vehicular, bike, pedestrian, bus, rail, freight, etc. When a TIS determines that the transportation system is deficient, improvements are identified to bring the transportation system to an adequate level of service.

The TIS guidelines establish uniform guidelines for conducting transportation impact. These guidelines are used to ensure consistent and proper planning and engineering practices necessary to provide an adequate transportation system.

A. Determining When a Transportation Impact Study is Required

The Engineering Director will determine when a TIS is required and will consider the following when making that determination.

1. Changes in land use designation, zoning designation, or development standard.
2. Changes in use or intensity of use.
3. Projected increase in trip generation.
4. Potential impacts to residential areas and local streets.
5. Potential impacts to priority pedestrian and bicycle routes, including, but not limited to, school routes and multimodal street improvements identified in the Transportation System Plan (TSP).
6. Potential impacts to intersection level of service.

Determination that a TIS is required is not a land use action and may not be appealed.

B. Transportation Impact Study General Provisions

All TISs, including neighborhood through trip and access studies, shall be prepared and certified by a registered Traffic or Civil Engineer in the State of Oregon.

TISs required by the Engineering Director that are not subject to Milwaukie Municipal Code Section 19.704 shall be subject to City TIS fees and deposits in accordance with the adopted fee schedule. The Engineering Director shall determine when TIS fees and deposits are applied to TISs.

The Engineering Director may require a TIS review conference with the Traffic Engineer.

C. Transportation Impact Study Requirements

1. TIS Scope

The Engineering Director will provide a TIS scope that will identify the study area, study intersections, trip rates, traffic distribution, and required content of the TIS.

2. TIS Content

The TIS shall include all of the following elements, unless waived by the Engineering Director.

a. Introduction and Summary

This section should include existing and projected trip generation including vehicular trips and mitigation of approved development not built to date, existing level and proposed level of service standard for City and County streets and volume to capacity for State roads, project build year and average growth in traffic between traffic count year and build year, summary of transportation operations, proposed mitigation(s), and traffic queuing and delays at study area intersections.

b. Existing Conditions

This section should include a study area description, including existing study intersection level of service.

c. Impacts

This section should include a site plan, an evaluation of the proposed site plan, and a project-related trip analysis (a figure showing the assumed future year roadway network).

d. Mitigation

This section should include proposed site and areawide specific mitigation measures.

e. Appendix

This section should include traffic counts, capacity calculations, warrant analysis, and any information necessary to convey a complete understanding of the technical adequacy of the TIS.

D. Transportation Impact Study Mitigation

The following measures may be used to meet mitigation requirements identified by a TIS:

1. Construct mitigation per TIS recommendation.
2. On- and off-site improvements beyond required frontage improvements.
3. Development of a transportation demand management program.
4. Payment of a fee in lieu of construction.
5. Correction of off-site transportation deficiencies within the study area that are not substantially related to impacts.
6. Construction of transportation facilities that exceed minimum required standards and that have a transportation benefit to the public.

5.0014 Intersections

Connecting street intersections shall be located to provide for traffic flow, safety, and turning movements, as conditions warrant.

At intersecting centerlines, a tangent section of a minimum of 25 feet shall be carried in each direction away from the intersection.

Arterial Intersections: Exclusive left and right turn lanes shall be provided; bus turnouts shall be provided if traffic flow and safety conditions warrant; designated crosswalks shall be provided at controlled locations; street alignments across intersections shall be continuous.

Collector, Neighborhood Routes, and Local Street Intersections: Street and intersection alignments shall facilitate local circulation and discourage nonlocal, through traffic.

Streets shall be aligned so as to intersect at right angles (90°). Angles of 75° and lower must be approved by the City Engineer for special intersection design. Intersection of more than 2 streets at 1 point will not be permitted.

New streets shall intersect with existing street intersections so that centerlines are not offset, except as provided below. Where existing streets adjacent to a proposed development do not align properly, conditions may be required of the development to provide for proper alignment.

For intersections which are not directly aligned with street centerlines, the centerline spacing must meet the following.

	Intersection Spacing (Ft.)		Block Perimeter (Ft.)
Street Class	**Minimum**	**Maximum**	**Maximum**
Arterial	530	1000	2600
Collector	300	600	1800
Neighborhood Route	150	530	1650
Local	100	530	1650

5.0015 Half-Street Plus Travel Lane Construction

Half-streets will only be approved when the abutting or opposite frontage property is undeveloped and the full improvement will be provided with development of the abutting or opposite (upon right-of-way dedication) frontage property. Where such a street is justified, the right-of-way and pavement width will be determined by the City Engineer. In no case shall the pavement width required be less than that necessary to provide 2 lanes of traffic to pass at a safe distance.

A development on an unimproved street shall be responsible for constructing a continuous, City-standard street connection to the nearest developed (publicly maintained) street.

5.0016 Street Classification

All streets within the city shall be classified as designated in the TSP. The classification for any street not listed shall be that determined by the City Engineer.

5.0017 Design Speed

Design speeds for each street classification shall be as follows.

Street Class	Speed
Arterial	35 - 45 mph
Collector	25 - 35 mph
Neighborhood Route/Local/Cul-de-sac	25 mph or based on minimum 150-200 feet stopping sight distance.

Where existing traffic conditions identify speeds in excess of design speeds listed, then the higher speed shall be used for design purposes.

5.0020 HORIZONTAL/VERTICAL CURVES, AND GRADES

5.0021 Horizontal Curves

Horizontal curve alignments shall meet the minimum radius requirements shown in the following tables.

Arterial and Collector Streets							
Design Speed (MPH)	Friction Factor (F)	E= -4%	-2.5%	0%	2.5%	4.0%	6.0%
		Centerline radius, in feet					
25	0.165	333’	298’	252’	219’	203’	185’
30	0.160	500’	444’	375’	324’	300’	273’
35	0.155	710’	628’	527’	454’	419’	380’
40	0.150	970’	853’	711’	609’	561’	508’
45	0.145	1286’	1125’	931’	794’	730’	658’
50	0.140	1667’	1449’	1190’	1010’	926’	833’
55	0.130	2241’	1921’	1551’	1301’	1186’	1061’

Neighborhood Routes, Local Streets, and Cul-de-sacs							
Design Speed (MPH)	Friction Factor (F)	E= -4%	-2.5%	0%	2.5%	4.0%	6.0%
		Centerline radius, in feet					
25	0.252	196’	184’	165’	150’	143’	134’
30	0.221	332’	306’	272’	244’	230’	214’

Where superelevation is used, street curves shall be designed as determined/approved by the City Engineer for maximum superelevation rate of 0.04. If terrain dictates sharp curvature, a maximum superelevation rate of 0.06 is justified if the curve is long enough by AASHTO Policy to provide an adequate superelevation transition.

Request for design speeds less than 25 mph will be determined/approved by the City Engineer based on topography, r.o.w., or geographic conditions for the applicant. Request must show that a reduction in centerline radius will not compromise safety.

f = friction factor
e = superelevation, in feet
R = centerline radius, in feet
V = design speed, in MPH

$$R = \frac{V^2}{15(e + f)}$$

5.0022 Vertical Curves

Vertical curve length shall be based on AASHTO Policy design criteria which includes design speed, crest vertical curve, and sag vertical curve. Stopping sight distance for crest and sag vertical curves shall be based on sight distance and headlight sight distance, respectively.

All vertical curves shall be parabolic and the length shall meet the minimum length required for each location.

5.0023 Grades

Maximum grades for each street classification shall be as follows except as approved by the City Engineer:

Street Class	Maximum Grade
Arterial	8%
Collector	10%
Neighborhood Route / Local / Cul-de-sac	15%

Minimum grade for all streets shall be 0.0075 feet per foot (0.75%) however, in all cases street grades shall allow for proper and adequate drainage. Cul-de-sac "bulbs" shall have a minimum slope of 0.0075 feet per foot (0.75%). Any grade change of more than 1% shall be accomplished with vertical curves.

5.0030 STREET DESIGN STANDARDS

Street design elements and dimensional standards for street cross sections by functional classification shall be as follows.

Street Classification	Full-Width Right-of-Way Dimension	Individual Street Elements					
		Travel Lane (Center Lane)	Bike Lane	On-Street Parking	Landscape Strips	Sidewalk Curb Tight	Sidewalk Setback
Arterial	54'-89'	11'-12' (12'-13')	5'-6'	6'-8'	3'-5'	8'-10'	6'
Collector	40'-74'	10'-11'	5'-6'	6'-8'	3'-5'	8'	6'
Neighborhood	20'-68'	10'	5'	6'-8'	3'-5'	6'	5'
Local	20'-68'	8' or 10'	5'	6'-8'	3'-5'	6'	5'
Truck Route	34'-89'	11'-12' (12'-13')	5'-6'	6'-8'	3'-5'	8'-10'	Per Street Classification
Transit Route	30'-89'	10'-12' (12'-13')	5'-6'	6'-8'	3'-5'	Per Street Classification	Per Street Classification

The following standards augment the dimensional standards contained in the table above and may increase the width of an individual street element and/or full-width right-of-way dimension.

1. Minimum 10-foot travel lane width shall be provided on local streets with no on-street parking.
2. Where travel lanes are next to a curb line, an additional 1 foot of travel lane width shall be provided. Where a travel lane is located between curbs, an additional 2 feet of travel lane width shall be provided.
3. Where shared lanes or bicycle boulevards are planned, up to an additional 6 feet of travel lane width shall be provided.
4. Bike lane widths may be reduced to a minimum of 4 feet where unusual circumstances exist, as determined by the Engineering Director, and where such a reduction would not result in a safety hazard.
5. Center turn lanes are not required for truck and bus routes on street classifications other than arterial roads.
6. On-street parking in industrial zones shall have a minimum width of 8 feet.
7. On-street parking in commercial zones shall have a minimum width of 7 feet.
8. On-street parking in residential zones shall have a minimum width of 6 feet.
9. Sidewalk widths may be reduced to a minimum of 4 feet for short distances for the purpose of avoiding obstacles within the public right-of-way including, but not limited to, trees and power poles.
10. Landscape strip widths shall be measured from back of curb to front of sidewalk.
11. Where landscape strips are required, street trees shall be provided a minimum of every 40 feet in accordance with these standards and the Milwaukie Street Tree List and Street Tree Planting Guidelines.
12. Where water quality treatment is provided within the public right-of-way, the landscape strip width may be increased to accommodate the required treatment area.
13. A minimum of 6 inches shall be required between a property line and the street element that abuts it; e.g., sidewalk or landscape strip.

The Engineering Director will determine the full-width cross section for a specific street segment based on functional classification using the dimensions and standards stated above. The full-width cross section is the sum total of the widest dimension of all individual street elements. If the Engineering Director determines that a full-width cross section is not appropriate or feasible, the Engineering Director may first reduce individual street elements to the minimum dimensions and standards stated above. If necessary to further reduce the street cross section width, the Engineering Director may eliminate individual street elements on one-or both sides of the street in accordance with Figure 10-1 of the TSP. When making a street design determination that varies from the full-width cross section, the Engineering Director shall consider the following:

1. Options and/or needs for environmentally beneficial and/or green street designs.
2. Multimodal street improvements identified in the TSP.
3. Street design alternative preferences identified in Chapter 10 of the TSP, specifically regarding sidewalk and landscape strip improvements.
4. Existing development pattern and proximity of existing structures to the right-of-way.
5. Existing right-of-way dimensions and topography.

5.0040 PAVEMENT DESIGN

In general, all streets shall be constructed with asphaltic concrete; however, Portland Cement Concrete (PCC) streets are permitted as approved by the City Engineer.

Typical flexible pavement thickness for neighborhood routes, local streets and alleys shall be as shown in the standard drawings.

The Design Engineer shall provide a street structural design section for all roadways classified collector and higher, and for all streets, including local streets, in industrial zones.

Asphalt pavement may be designed using any nationally recognized procedure. The procedures contained in the following references are preferred.

AASHTO Guide for Design of Pavement Structures, Current Issue.

Thickness Design – Asphalt Pavements for Highways and Streets. The Asphalt Institute, Current Issue.

Concrete pavement may be designed using any nationally recognized procedure. The procedures contained in the following references are preferred.

AASHTO Guide for Design of Pavement Structures, Current Issue.

Thickness Design for Concrete Highway and Street Pavements. Portland Cement Association, Current Issue.

5.0050 CONCRETE CURB

Concrete curbs are typically required on street improvements for all new development projects.

Top of curb elevation and centerline elevations shall be equal in standard street cross sections, unless otherwise approved by the City Engineer. In nonstandard street cross sections, the minimum cross-slope shall be 2.0% and the maximum cross-slope shall be 3.5%.

Control joint spacing in curbs shall be at a 15-foot maximum at all curb return points and at driveway curb-drop transition points.

5.0051 Curb Return Radius

Curb return radius at street intersections shall be designed to accommodate all expected traffic. Curb extensions and/or special crosswalk/sidewalk features designed to enhance pedestrian safety may be required to encourage pedestrian usage. Minimum curb radii required are as follows.

Intersection	Radius
Transit Route—Arterial or Collector	35’
Arterial—Arterial	35’
Collector/Arterial—Collector	25'
Arterial—Neighborhood Route or Local Street	25'
Neighborhood/Local/Collector—Neighborhood Route or Local Street	25’
Neighborhood Route—Neighborhood Route	25’
Local Street—Local Street	25’

Larger curb radii may be required on streets serving commercial/industrial properties for vehicle movements.

5.0060 SIDEWALKS

In general, new sidewalks with curbs are required for any development requiring a development permit. The location of the sidewalk within a development will be determined in the development review process.

Sidewalks shall be a minimum 5' wide for neighborhood route and local and 6' for collectors and arterials, unless otherwise approved by the City Engineer and shall be typically separated 5' from the face of the curb by a planter strip. If no planter strip, then minimum sidewalk width is 6' for local and neighborhood routes, 8' for collectors, and 10' for arterials. The maximum permitted slope across the planter strip shall be 4:1.

Sidewalks shall be within the dedicated right of way, unless specifically approved by the City Engineer. Where sidewalks are approved outside of the dedicated right-of-way, a public sidewalk easement shall be provided.

Sidewalks shall have a maximum slope 1:12 and a cross slope of 1:50. Where steeply sloped roadways and constrained right-of-way preclude a running slope of 1:12, the least possible running slope shall be provided.

All structures in the sidewalk area shall be located to provide a minimum unobstructed width of 48" horizontal. Where cluster mailboxes or other objects larger than single mailboxes are within the sidewalk area, the walk shall be widened to provide adequate clearance, or be aligned to go around any obstacles. Alternate alignments and widths must be approved by the City Engineer. A 7' vertical clearance above the sidewalk shall be maintained.

5.0061 Sidewalk Ramps

All intersections shall contain sidewalk ramps (for access) located within the curb return. Two intersecting local streets shall typically have a single ramp centered within the curb return. All other street intersections shall typically have twin curb ramps as shown in Milwaukie Standard Drawings 506 and 507. Sidewalk ramps shall be located with regard to storm water flows, street grades, utility or light pole locations and existing opposing ramps. Sidewalk ramps shall meet all applicable guidelines of the Americans with Disabilities Act (ADA).

5.0070 BIKEWAYS

The need for bikeways shall be determined by the City's TSP. Bikeway facilities including bicycle parking, on-street and off-street bike lanes, shared lanes, bike boulevards, and bike paths, shall meet the requirements of the following documents.

1. AASHTO, "Guide to Development of Bicycle Facilities"
2. ODOT, "Oregon Bicycle & Pedestrian Plan," latest edition
3. Manual on Uniform Traffic Control Devices with Oregon supplements by Oregon Transportation Commission
4. Chapter 6 of the City of Milwaukie TSP.

5.0071 Bikeway Facilities Required

Bikeway facilities shall be provided at locations identified by the City's TSP.

5.0072 Design Criteria

In general, bikeway design shall meet the adopted standards referred to in Subsection 5.0070 (Bikeways).

Bikeway curvature will be based on a minimum design speed of 20 MPH. Bikewayor bike lane will follow slope of roadway.

Bikeway grades shall be limited to a maximum of 5%. Where topography dictates, grades over 5% are acceptable when a higher design speed is used and additional width is provided.

All design shall conform to the minimum requirements of the Oregon Bike and Pedestrian (ODOT) standards.

When bikeways are integrated with a curb, all inlet grates shall be designed to protect the bicyclist from the grate or opening.

Bike paths shall have a minimum right-of-way width of 15 feet and a minimum improved surface width of 10 feet.

5.0073 Construction

Bikeways shall be either asphalt or concrete surfaced.

When drainage such as side ditches is required parallel with the bikeway, the ditch centerline shall be at least 5' from the edge of the pavement. Ditch side slope adjacent to the bikeway shall be no steeper than 2:1 when measuring the horizontal distance to the vertical distance.

When culverts cross bikeways, the ends of the pipe shall be no closer than 5' from the edge of the bikeway.

5.0080 ACCESSWAYS

Access to private property shall be permitted with the use of driveway curb cuts. The access points with the street shall be the minimum necessary to provide access while not inhibiting the safe circulation and carrying capacity of the street. Driveways shall meet all applicable guidelines of the ADA.

New accessways and the modification of existing accessways shall comply with this section.

Where accessway requirements and standards cannot be met due to the location or configuration of an existing building or structure, the existing accessways shall be brought into conformance with this section to the greatest extent feasible as determined by the Engineering Director.

5.0081 Accessway Spacing

Spacing between accessways is measured between the closest edges of driveway aprons where they abut the roadway. Spacing between accessways and street intersections is measured between the nearest edge of driveway apron and the nearest face of curb on the intersecting street. Where intersecting streets do not have curb, the spacing is measured from the nearest edge of pavement.

Access spacing on arterial streets is a minimum of 600 feet.

Access spacing on collector streets is a minimum of 300 feet.

Access spacing may be modified with submission of an access study prepared and certified by a registered professional Traffic Engineer in the State of Oregon. The access study shall include the following.

1. Review of site access spacing and design.
2. Evaluation of traffic impacts adjacent to the site within a distance equal to the required access spacing distance from the project site.
3. Review of all modes of transportation to the site.

4. Mitigation measures where access spacing standards are not met include, but are not limited to:

    a. Placement of medians.

    b. Consolidation of accessways.

    c. Shared accessways.

    d. Temporary access.

    e. Provision of future consolidated accessways.

    f. Other measures that would be acceptable to the Engineering Director.

5.0082 Accessway Location

For lots with more than 1 frontage on a street, access shall be provided first from the street with the lowest classification.

Individual access to single-family residential lots from arterial and collector streets is prohibited. An individual accessway may be approved by the Engineering Director when the following conditions are met.

1. There is no practicable alternative to access the site, as determined by the Engineering Director.

2. Shared access is provided by easement with adjacent properties.

3. The accessway is designed to contain all vehicle backing movements on the site.

4. Shared access is provided with adjacent properties.

The nearest edge of a driveway apron shall be at least 7½ feet from the side property line in residential districts and at least 10 feet from the side property line in all other districts. This standard does not apply to accessways shared between 2 or more properties.

The following distance from the nearest intersecting street face of curb to the nearest edge of driveway apron shall be maintained. Where an intersecting street does not have a curb, the distance shall be measured from the nearest intersecting street edge of pavement.

1. At least 45 feet for single-family residential properties accessing local and neighborhood streets. Where the distance cannot be met on existing lots, the driveway apron shall be located as far from the nearest intersection street face of curb as practicable.

2. At least 100 feet for multifamily residential properties and all other uses accessing local and neighborhood streets.

3. At least 300 feet for collectors, or beyond the end of the queue of traffic during peak hour conditions, whichever is greater.

4. At least 600 feet for arterials, or beyond the end of queue of traffic during peak hour conditions, whichever is greater.

5.0083 Number of Accessway Locations

The number of accessways on collector and arterial streets shall be minimized whenever possible through the use of shared accessways and coordinated on-site circulation patterns. Shared accessways or internal access between uses shall be established by means of common access easements.

1 accessway per property is allowed for single-family residential use.

1. For lots with more than 1 street frontage on a local street and/or neighborhood route, an additional accessway may be granted. Under such circumstances, a street frontage shall have no more than 1 driveway approach per lot.

2. For lots with 1 street frontage on a local street and/or neighborhood route, 1 additional accessway may be granted where the driveway approaches can be spaced 50 feet apart, upon review and approval by the Engineering Director. The spacing is measured between the nearest edges of the driveway aprons.

3. No additional accessways shall be granted on collector or arterial streets.

The number of accessways for uses other than single-family residential is subject to the following provisions.

1. Access onto arterial and collector streets is subject to the access spacing requirements of Subsection 5.0081.

2. 1 accessway is allowed on local streets and neighborhood routes. 1 additional accessway is allowed per frontage where the driveway approaches, including adjacent property accessways, can be spaced 150 feet apart. The spacing is measured between the nearest edges of the driveway aprons.

5.0084 Accessway Design

Driveway approaches shall meet all applicable standards of the ADA.

The Engineering Director may restrict the location of accessways on streets and require that accessways be placed on adjacent streets upon finding that the proposed access would:

1. Cause or increase existing hazardous traffic conditions;

2. Provide inadequate access for emergency vehicles; or

3. Cause hazardous conditions that would constitute a clear and present danger to the public health, safety, and general welfare.

Accessways shall be designed to contain all vehicle backing movements on the site, except for detached or attached single-family residential uses on local streets and neighborhood routes.

5.0085 Accessway Size

Accessways shall be the minimum width necessary to provide the required number of vehicle travel lanes. Vehicle turning templates may be required to verify that an accessway is appropriately sized for the intended use.

Single-family attached and detached residential uses shall have a minimum driveway apron width of 9 feet and maximum width of 20 feet.

Multifamily residential uses with 3 dwellings shall have a minimum driveway apron width of 16 feet and maximum width of 20 feet.

Multifamily residential uses with between 4 and 7 dwellings shall have a minimum driveway apron width of 20 feet and a maximum width of 24 feet.

Multifamily residential uses with more than 8 dwelling units, and off-street parking areas with 16 or more spaces, shall have a minimum driveway apron width of 24 feet and a maximum width of 36 feet.

Commercial, office, and institutional uses shall have a minimum driveway apron width of 12 feet and a maximum width of 36 feet.

Industrial uses shall have a minimum driveway apron width of 15 feet and a maximum width of 45 feet.

Maximum driveway apron widths for commercial and industrial uses may be increased if the Engineering Director determines that more than 2 lanes are required based on the number of trips generated or the need for on-site turning lanes.

5.0090 STREET LIGHTING, TREES, NAMES AND SIGNAGE

5.0091 Street Lighting

A complete street lighting system shall be the responsibility of the development. All streets fronting the property shall be provided adequate lighting as determined by the City Engineer. For lighting requirements, all developments will be required to submit a lighting plan to the City Engineer. The lighting plan shall conform to IES (Illuminating Engineering Society) standards except as modified by the City.

For new subdivisions or land use actions requiring street light installation, all plans for street lights shall be submitted with the construction plan submittal. Approvals for street light plans will be issued as part of the construction plan package.

See Section 5.0191.D for additional street lighting requirements in the downtown area. Required street lights shall be acquired through Portland General Electric (PGE) under the Option "B" plan (City-owned equipment, maintenance and energy from PGE). Fixtures shall be on PGE's approved list and approved by the City Engineer.

Nonstandard fixtures approved for installation shall be acquired through PGE under the Option "C" plan (Customer-owned equipment and maintenance, energy from PGE) and an agreement for maintenance responsibility shall be in place prior to street light installation.

It is the policy of the City to light streets to the IES Standards listed below with the following exceptions.

Street Classification	Area Classification	Average Maintained Illumination	Uniformity Average to Minimum
Arterials	Commercial Intermediate Residential	1.7 footcandles 1.3 footcandles 0.9 footcandles	3 to 1
Collector	Commercial Intermediate Residential	1.2 footcandles 0.9 footcandles 0.6 footcandles	4 to 1
Neighborhood Route Local Cul-de-sac	Commercial Intermediate Residential	0.9 footcandles 0.7 footcandles 0.4 footcandles	6 to 1

Commercial: A business area of the city where ordinarily there are many pedestrians during night hours. This definition applies to densely developed business areas outside, as well as within, the central part of the city. The area contains land use which attracts a relatively heavy volume of nighttime vehicular and/or pedestrian traffic on a frequent basis.

Residential: A residential development, or a mixture of residential and small commercial establishments, with few pedestrians at night.

5.0092 Street Names, Traffic Control Signage, and Pavement Markings

Street names for all new development will be approved by the City prior to recording of any maps or plats. The development shall pay for all street name and traffic control signage prior to the signing of the final plat or map by the City. All new signage and pavement markings in the public right-of-way will be installed by the City in new developments.

5.0100 DEAD-END STREETS AND CUL-DE-SACS

Permanent turnarounds shall be provided when no opportunity exists for creating a through street connection. Turnarounds shall have a maximum length of 400 feet, measured from the cross street right-of-way to the farthest point of the right-of-way containing the turnaround.

Temporary turnarounds shall be provided for street stubs in excess of 150 feet in length, measured from the cross street right-of-way to the farthest point of the right-of-way containing the turnaround.

Turnarounds shall be designed in accordance with the latest edition of the Oregon Fire Code. In the event the Oregon Fire Code does not apply, the Engineering Director will specify the design vehicle that the turnaround must accommodate.

5.0110 PRIVATE STREETS/ALLEYS

5.0111 Alleys

A. Commercial and Industrial

Alleyways may be provided in commercial and industrial developments with approval by the City Engineer. When approved, alleyways shall be dedicated to the City. Standard alleyway dimensions shall be a 12-foot wide paved surface inside a 16-foot wide right-of-way.

Design for alleyways shall meet the same criteria as other public streets. The exception to those criteria may be centerline radius and design speed. Generally, alleyways shall be designed for one-way operation.

B. Residential Districts

To serve development, alleys allow for efficient lot use, support front yard pedestrian orientation and landscape spaces, and reduce lot coverage by driveways. Alleys serve as a common driveway for access, utilities, and deliveries. Alley design shall conform to the latest adopted TSP.

5.0112 Private Residential Accessways

In general, private residential streets and accessways shall be provided for multi-family developments such as condominiums and apartments. Interior design for private accessways in a manufactured home park shall meet the standards of the community development code. The standards for private residential accessways include:

1. Dead-end accessways which exceed 150 feet in length shall be provided with an approved turnaround.
2. "PRIVATE STREET" signage and driveway approach shall be placed at the intersection with the public street to clearly identify the private accessway.
3. Private maintenance of the private streets/accessways shall be provided by a Homeowner's Association or other appropriate entity. Maintenance shall ensure continual emergency accessibility at all times.
4. Location of private accessways shall meet the Uniform Fire Code and meet the minimum pavement section of local residential streets.
5. Private residential accessways will be allowed in Manufactured Home Parks but shall not be allowed in Manufactured Home Subdivisions.

5.0120 LOCAL STREET DESIGN FOR ADVERSE TOPOGRAPHY

In standard local street design, the top of curb elevations shall equal the finished centerline elevations, except in situations of adverse topography. The Design Engineer may utilize an "offset" or unequal crown section when the existing ground slope exceeds 8.00% across the roadway section.

The offset crown design shall meet the following conditions.

1. Minimum distance from "crown" to (1) face of curb is 10.00 feet.
2. Maximum cross-slope of pavement is 5.00%.
3. Maximum differential in top of curb elevation from one side to the other is 1.00 foot.

The existing ground "side-slope" criteria is based on the relationship of the slope of the ground to the transverse slope of the roadway profile. This relationship shall be met for the entire length of the roadway alignment utilizing an offset crown.

5.0130 MEDIANS

Raised medians are allowed on certain streets, but must be approved by the City Engineer. If medians are allowed, the following criteria must be met.

1. The median must be set back at least 1 foot from the travel lane on both sides.
2. Street lighting shall be sufficient to provide illumination of the median.
3. Objects such as trees, shrubs, signs, light poles, etc., shall not physically or visually interfere with vehicle or pedestrian traffic or traveled way. Medians and objects within the median can be site specific and will be subject to City approvals.
4. Medians in the public right-of-way are maintained by the Operations Department. Planting and irrigation plans for medians shall be submitted to the Operations Department for review. Inspections of planting and irrigation systems shall be coordinated directly with the Operations Department. Irrigation of medians shall be designed to water lawn areas and shrub areas separately.

5.0140 GUARDRAILS

The decision of whether to install guardrails shall be based on the information found in the AASHTO publication, "Guide for selecting, locating, and designing traffic barriers."

Guardrails shall be designed and constructed per ODOT’s standard drawings for design and construction.

5.0150 PAVEMENT TRANSITIONS

In the direction of vehicular traffic, street width transitions from a narrower width to a wider width shall be designed with a 3-to-1 taper. Delineators, as approved by the City, shall be installed to define the configurations.

In the direction of vehicular traffic, street width transitions from a wider width to a narrower width and the length of transition taper shall be determined as follows.

$L = S \times W$ for S = 45 MPH or greater

$L = \frac{S^2 \times W}{60}$ for S less than 45 MPH

Where L = minimum length of taper (ft.)
S = Design speed (MPH)
W = EP to EP offset width
EP = Edge of pavement to center line

Delineators, as approved by the City, may be installed to define the configuration. Maximum spacing of delineators shall be the numerical value of the design speed, in feet (e.g., 35-foot spacing for 35 MPH).

5.0160 FENCES

Fences in the right-of-way shall comply with the community development code as well as special overlay zones where applicable. Fences within the right-of-way in the downtown area shall be per drawing no. 708.

5.0170 RAIL CROSSINGS

5.0171 Regulations

The maintenance and repair of railroad crossings are the responsibility of rail companies for commercial rail lines, regulated by the Public Utility Commission, and TriMet for light rail.

All work undertaken and all alterations to the streets near a railroad crossing shall comply with the Federal Train Horn Rule for Quiet Zones as regulated by the Federal Rail Administration. New crossing orders may also be required by ODOT Rail Division.

Signage required at each crossing must meet current MUTCD standards.

New structural requirements shall be consistent with current AASHTO requirements and not less than concrete track section or concrete panels on roadway and sidewalk section. Road and rail needs shall be provided.

Resurfacing to the longitudinal street grades shall meet City of Milwaukie standards for longitudinal grades.

The downtown area or other special overlay zone may have different requirements. The City Engineer shall make the final determination on which requirement shall be used.

Where other regulations conflict with the City's, bring to the attention of the City Engineer.

5.0172 Design Requirements

Permits and special rail flaggers are required when working within the railroad zone. Check with railroad operator and authority regarding limits of work and necessary permits. New and reconstructed light rail and freight rail construction may require improvements to the public utility systems at each utility crossing. Electrified rail lines may exist at these street crossings.

All accessible structures must be located a minimum of 15 feet from the gate arms outside of the rail crossings, 50 feet from the freight and high(er) speed rail track centerlines, or 25 feet from light rail track centerlines, whichever is greater. City maintenance crews shall not be required to access structures where rail flagging or traffic flagging across a rail line would be needed.

All public rail crossings, and those used as public, shall have pedestrian facilities separated from the vehicular facility.

Additional road surface treatments shall be used to enhance safety of bicycle rail crossings. City Engineer shall approve method.

All metal pipes or conductive materials crossing rail lines shall be removed as part of demolition to reduce the possibility of electrification of public utilities and surface features.

5.0180 TRAFFIC CALMING

Traffic calming elements may be used, with the concurrence of the City Engineer, to address known traffic issues. The City's TSP provides a list of acceptable measures.

5.0190 DOWNTOWN STREETS

Refer to specific street section drawing nos. 711A to 719B for dimensions, parking, sidewalk, trees, lighting, and landscape strips.

Modifications to typical dimensions may be required due to other constraints. Final construction design shall be consistent with the design details and dimensions to the greatest extent practicable. Sidewalks are to be scored concrete or brick. See the street section details. Use City of Milwaukie granite logo medallion where specified in details.

5.0191 Street Design

All utilities in the downtown area must be underground.

Where a conflict exists, it is the responsibility of the design engineer to bring it to the Community Development Director's attention.

A. Mid Block Parking Lot/Structure Access

Entrances into off-street surface or structured parking areas should be through driveways located approximately at midblock and a minimum of 50 feet from the corner of the right-of-way line.

Maximum driveway width is 24 feet.

Driveways are encouraged on east-west cross streets, such as Harrison, Jefferson, Jackson, Washington, and Monroe. Access study requirements are applicable.

B. Corner Radii

The standard radius is 15 feet for typical street corners.

Exceptions:

- Bus/truck routes with bike lanes shall be 20 feet.
- Bus/truck routes without bike lanes shall be 35 feet.

Refer to the TSP for locations of bus and truck routes.

C. Landscape Requirements

Street trees shall be installed per standard and street specific details. Details show soil, irrigation, drainage, and plant size requirements. Original root ball wrap to be removed.

Downtown street trees include: Incense Cedar, Chanticleer Pear, Honey Locust, Kwanzan Cherry, Chinese Dogwood, Red Maple, Red Oak, Frans Fontaine Hornbeam, and Sequoia. Refer to the Street Cross Section drawings for tree types, spacing, and size on each block. Irrigation systems are required. Tree wells require a drip system and planters need a sprinkler head system.

All shrubs and ground cover shall be irrigated. They shall be low-maintenance and provide color and interest. They shall be low in height to avoid obstructing views, to comply with clear vision standards, or spreading. Ground cover shall tolerate foot traffic. Use native materials when possible.

D. Street lights

The fixture types shall be twin historic ornamental, single historic ornamental, and cobra head ornamental (Dark Sky). See specific street section standard drawings for required street lighting fixture type.

Fixtures shall be on PGE's approved list and approved by the City Engineer. The following fixtures have been preapproved for use in the downtown area.

Historic Ornamental:

Luminaire	Hadco S8539 (Black)
Luminaire Pole	Hadco P-2065-14-A (Black)
Luminaire Arm	Hadco M0302 (Black) – For Twin Ornamental Only

Cobra Head Ornamental:

Luminaire	None
Luminaire Pole	Hadco P-2065-14-A (Black)

In addition to meeting the street lighting requirements of Section 5.0091, the street lights shall be staggered along each block and aligned at each corner. Street lights shall be located near pedestrian crossings and combined with traffic pedestrian crossing signals where applicable. See standard drawing nos. 706 and 707 for street light placement at corners.

1. LED street lights

The City supports the use of LED street lights and will consider their use once they are approved by PGE.

E. Street furniture elements

This section shall include benches, trash receptacles, tree grates, bollards, fountains, and etc. This section shall only apply to these street furniture elements within the public right-of-way. These elements are required to be installed with street improvement projects.

Benches are to be Victorian-era styled benches made of wood with black, powder-coated, cast-iron end frames. The following is a list of benches approved for use in the downtown area.

Fairweather Site Furnishings & Accessories Model TD-3 with IPE wood.

Trash receptacles shall be flared steel trash receptacles with an optional ash trap. The following is a list of trash receptacles approved for use in the downtown area.

Huntco "Wenatchee" 32-gallon, black, powder-coated, latching door, ash dome top, black removable liner.

Iron tree grates shall be Radial Pattern Iron Tree Grates with expandable tree opening. The following is a list of tree grates approved for use in the downtown area.

Neenah Foundary R-8742 180 Degree Square.

Bollards shall be ornamental bollard, black, height 36" to 42". Bollards are to be set 5' on-center. Use bollards where specified per standard details. The following is a list of bollards approved for use in the downtown area.

Fairweather Site Furnishings & Accessories Model CB-C, black with a 10" wide base and 40" height.

Fountains are to be ornamental water fountain with continuous flowing bubbler or other as approved.

Other elements shall be as approved by the City Engineer.

F. Bicycle Facility Details

Bike racks shall be tubular steel, black in color. Bike racks shall be grouped in front of public facilities. In addition, bike racks shall be placed 4 per block on Main Street and 2 per block on all other downtown streets. The following is a list of bike racks approved for use in the downtown area.

Pilot Rock Park Products Model HRP/G "Hitchin' Post", powder-coated, black.

Where bike racks are covered by awnings, canopies, or shelters the minimum vertical clearance is 7' with horizontal clearance from a building of 3' and 5' between racks under shelters.

END OF SECTION

STANDARD DRAWINGS

TABLE OF CONTENTS

SANITARY

300 Standard Sanitary Sewer Manhole
301 Shallow Sanitary Sewer Manhole
302 Poured-in-Place Sanitary Sewer Manhole Base
303 Outside Drop Manhole
304 Sanitary Sewer Manhole Frame and Cover
305 Waterproof and Tamperproof Frame and Cover
306 Manhole Step
307 Standard Cleanout
308 Standard Sewer Tap
309 Sewer Service Branch

WATER

400 Fire Hydrant Installation
401 Standard 1 Inch Water Service
402 Standard 1.5-2 Inch Water Service
403 Standard 2 Inch Blow-off Assembly
404 Standard Air Release Valve Unit
405 Thrust Blocking
406 Standard Straddle Block
407 Standard Wastewater Crossing
408 Standard Wet Tap 2.5 Inch and Larger
409 Standard Valve Box Detail
410A Standard Hersey MFM-MCT Compound Meter
410B Standard Hersey MFM-MCT Compound Meter Notes
411A Double Detector Check Vault
411B Double Detector Check Vault Notes
412 Above Ground Sampling Stations

STREETS

500 Standard Curb and Gutter
501 Standard Type C Curb
502A Set Back Driveway Approach Landscape Strip ≥ 5.0'
502B Set Back Driveway Approach Landscape Strip < 5.0'
502C Curb Tight Driveway Approach Driveway Width ≤ Apron Width
502D Curb Tight Driveway Approach Driveway Width > Apron Width & Sidewalk ≥ 6.0'
502E Curb Tight Driveway Approach Driveway Width > Apron Width & Sidewalk < 6.0'
502F Asphalt Driveway Approach
503 Barricade
504 Sidewalk

STREETS (continued)

505	Mid-Block Sidewalk Ramps
506	Curb Tight Intersection Sidewalk Ramps
507	Setback Sidewalk Intersection Ramps
508	Mid-Block Curb Extension
509	Intersection Curb Extension
510	Street Cross Sections
511	Cul De Sac
512	Street Monument
513	Traffic Island
514	Utility Placement
515	Trench Patch
516	Asphalt Repair for Newly Paved Roads
517	Pavement Marking Standard Detail Blocks
518	Pavement Marking Standard Detail Blocks
519	Pavement Marking Standard Detail Blocks
520	Pavement Marking Standard Detail Blocks
521	Rail Crossing Pavement Markings
522A	Intersection Pavement Markings - Stop Bars
522B	Intersection Pavement Markings - Bike Lanes
522C	Intersection Pavement Markings - Crosswalk
523	Turn Arrow Marking Details
524A	Alignment Layout - Left Turn Lane
524B	Alignment Layout - Centerline
524C	Alignment Layout - Medians

STORM

600	G-2 Catchbasin
601	G-2 Trapped Catchbasin - Snout™
602	G-2 Trapped Catchbasin - Baffle
603	G-2 Catchbasin Flow Through
604A-B	Curb Inlet Catchbasin - Sidewalks
605	Catchbasin - Ditch Inlet
606	G-2 Catchbasin Frame
607	G-2 Catchbasin Grate
608	Pollution Control Manhole w/ Snout™
609	Pollution Control Manhole w/ Baffle
610	Baffle Details
611	Sedimentation Manhole
612	Sedimentation Manhole Drywell
613	Drywell
614	Underground Detention
615	Manhole Base
616	Manhole Riser Details
617	Storm Manhole Frame and Lid
618	Boltdown Lid Detail

619 Manhole Connection Detail
620 Storm Collection Guidelines
621 Storm Lateral Connection
622 Storm Lateral Cleanout
623 Riprap
624 Approved Plantings for Water Quality Facilities

DOWNTOWN

700 Downtown Curb and Gutter
701 Downtown Curb
702 Downtown Crosswalk Transition
703 Downtown Sidewalk
704 Downtown Sidewalk
705 Downtown Sidewalk
706 Downtown Intersection Curb Extension
707 Downtown Intersection Curb Extension
708 Street Tree Grate
709 Decorative Fence
710 McLoughlin Boulevard Cross Section
711A-D Main Street Cross Sections
712A-E 21st Avenue Cross Sections
713 New Street Cross Section
714A-C Harrison Street Cross Sections
715A-B Jackson Street Cross Sections
716A-C Monroe Street Cross Sections
717 Jefferson Street Cross Section
718A-B Washington Street Cross Sections
719A-B Adams Street Cross Sections

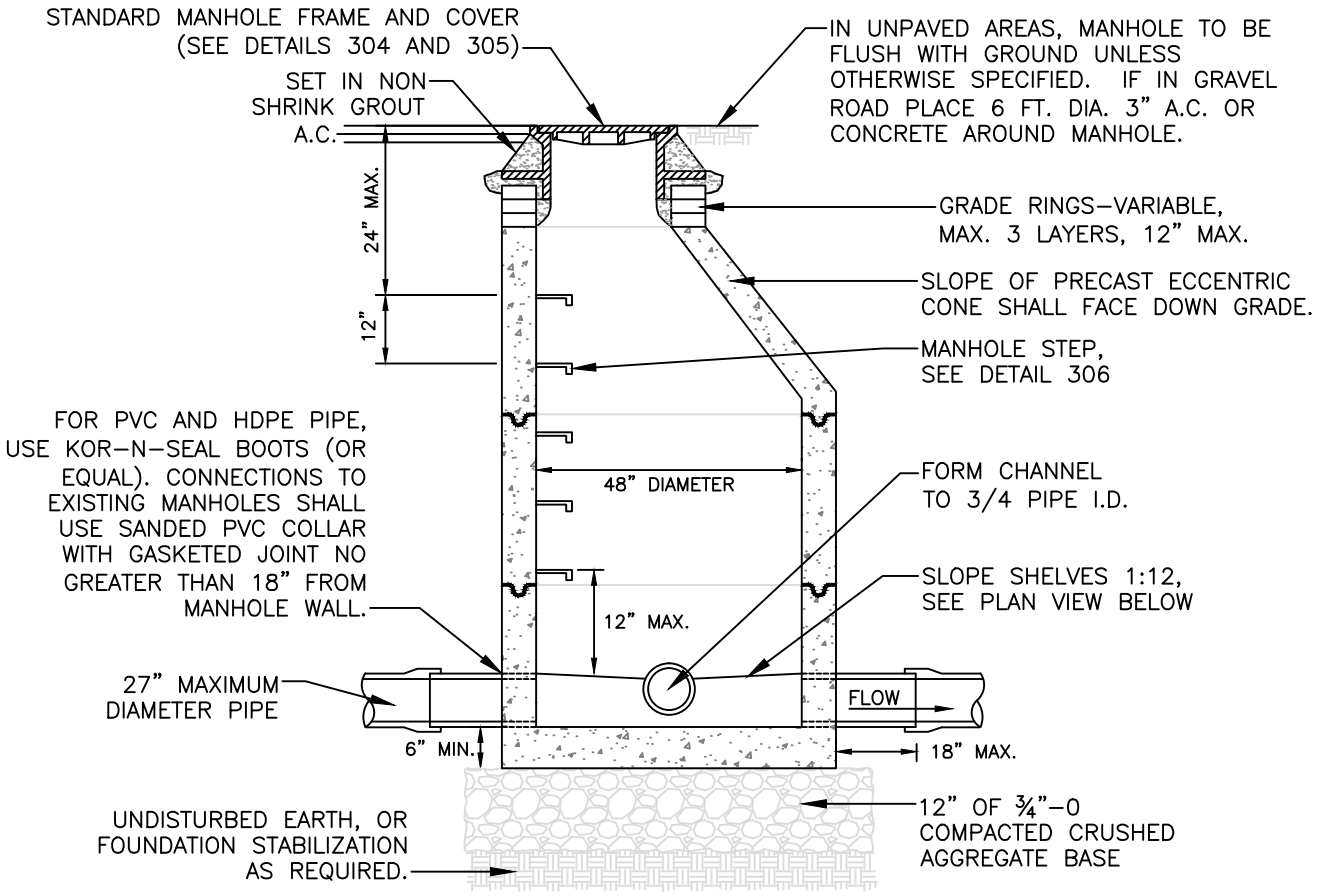

NOTES:

1. MANHOLES SHALL BE CONSTRUCTED USING PRECAST, REINFORCED CONCRETE SECTIONS. BASE, RISER, AND CONE SECTIONS, AND OTHER APPURTENANCES MUST CONFORM TO ASTM C478.

2. USE PRECAST BASE SECTIONS UNLESS OTHERWISE DIRECTED. USE POURED-IN-PLACE MANHOLE BASE IF OVER EXISTING PIPE. SEE DETAIL 302 FOR POURED-IN-PLACE MANHOLE BASE.

3. ALL JOINTS SHALL BE SEALED WITH PREFORMED PLASTIC OR RUBBER RING TO FORM A WATERTIGHT SEAL. GROUTED JOINTS ARE NOT PERMITTED ON SEWER MANHOLES.

4. FOR MANHOLE DEPTHS LESS THAN 4 FEET (AS MEASURED FROM CROWN OF PIPE TO MANHOLE RIM), SEE DETAIL 301 FOR STANDARD SHALLOW MANHOLE.

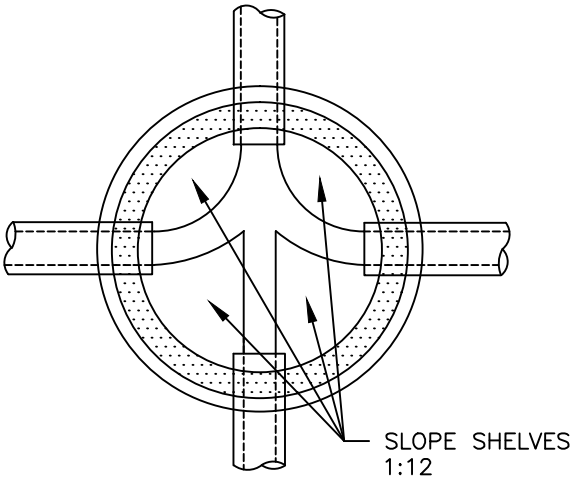

PLAN VIEW

CITY OF MILWAUKIE, OREGON – PUBLIC WORKS DEPT.

Standard Sanitary Sewer Manhole

DRAWING NO. **300**

APPROVED Gary Parkin 12/12
CITY ENGINEER DATE

NO.	REVISIONS	DATE	BY
1	FORMATTING, ADDED DRAWING REFERENCE	12/10	MCP
2	CHANGED TO PRECAST, CLARIFIED NOTES	12/12	MCP

DEC 2012

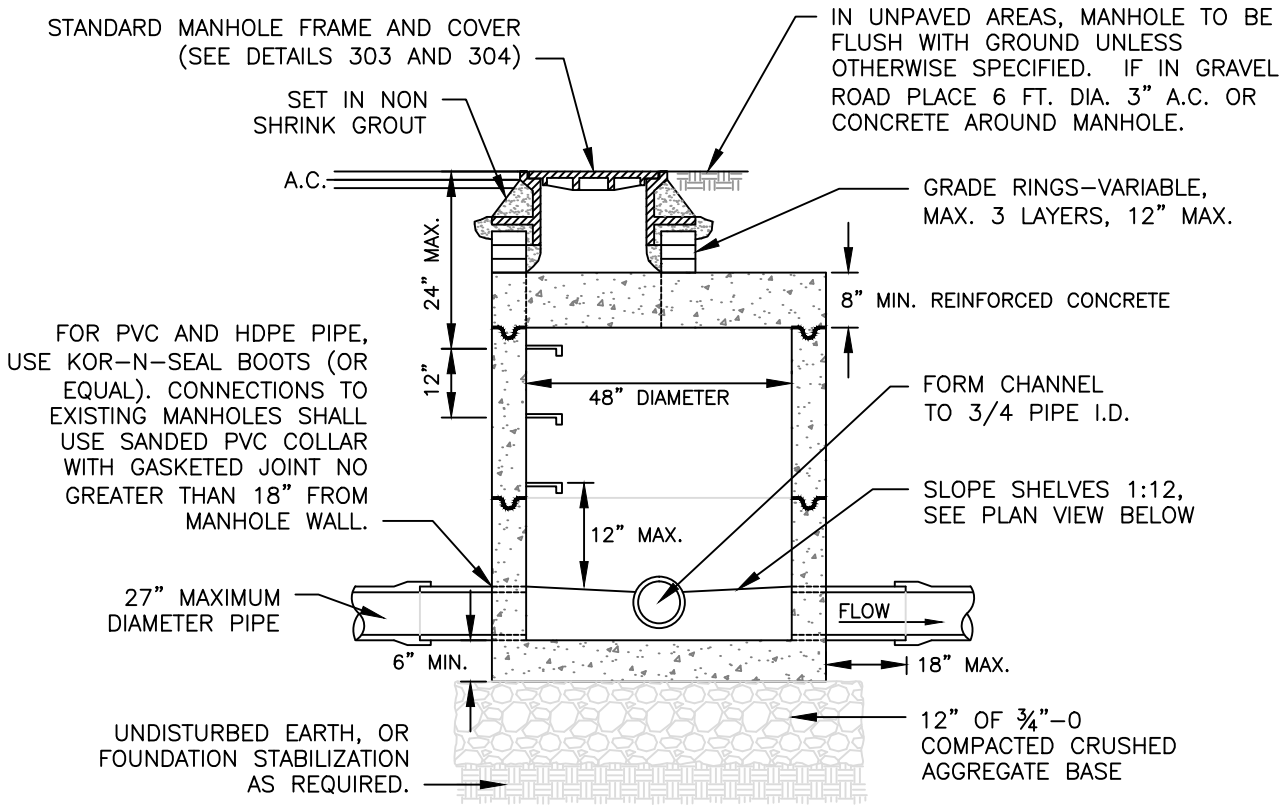

NOTES:

1. MANHOLES SHALL BE CONSTRUCTED USING PRECAST, REINFORCED CONCRETE SECTIONS. BASE, RISER, AND CONE SECTIONS, AND OTHER APPURTENANCES MUST CONFORM TO ASTM C478.

2. USE PRECAST BASE SECTIONS UNLESS OTHERWISE DIRECTED. USE POURED–IN–PLACE MANHOLE BASE IF OVER EXISTING PIPE. SEE DETAIL 302 FOR POURED–IN–PLACE MANHOLE BASE.

3. ALL JOINTS SHALL BE SEALED WITH PREFORMED PLASTIC OR RUBBER RING TO FORM A WATERTIGHT SEAL. GROUTED JOINTS ARE NOT PERMITTED ON SEWER MANHOLES.

4. FOR MANHOLE DEPTHS GREATER THAN 4 FEET (AS MEASURED FROM CROWN OF PIPE TO MANHOLE RIM), SEE DETAIL 300 FOR STANDARD SANITARY SEWER MANHOLE.

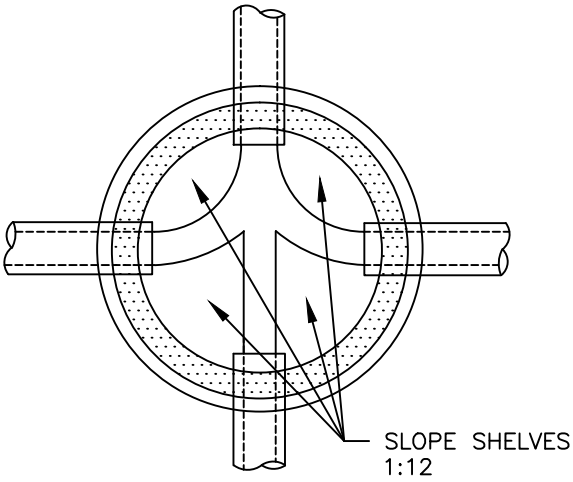

PLAN VIEW

CITY OF MILWAUKIE, OREGON – PUBLIC WORKS DEPT.

Shallow Sanitary Sewer Manhole

DRAWING NO. **301**

APPROVED Gary Parkin 12/12
CITY ENGINEER DATE

NO.	REVISIONS	DATE	BY
1	GENERAL FORMATTING	12/10	MCP
2	CHANGED TO PRECAST, CLARIFIED NOTES	12/12	MCP

DEC 2012

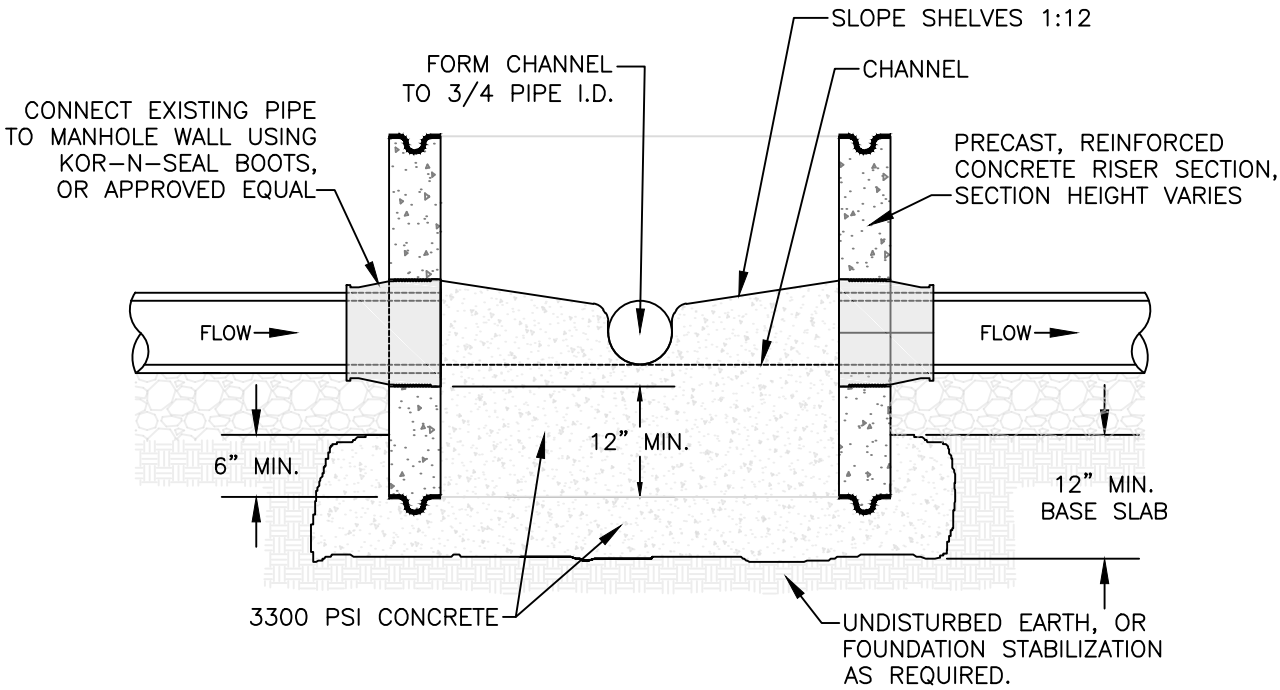

NOTES:

1. MANHOLE BASE SHALL BE CONSTRUCTED USING A PRECAST, REINFORCED CONCRETE RISER SECTION PLACED IN A CONCRETE BASE SLAB BEFORE CONCRETE HAS SET. THE RISER SECTION SHALL CONFORM TO ASTM C478.
2. CONCRETE COMPRESSIVE STRENGH AFTER 28 DAYS SHALL BE A MINIMUM OF 3300 PSI.
3. MORTAR SHALL BE PLACED AROUND THE BASE TO ENSURE A WATERTIGHT SEAL BETWEEN THE BASE SLAB AND THE MANHOLE RISER SECTION.
4. PRECAST RISER SECTION MUST PENETRATE THE CONCRETE BASE SLAB A MINIMUM OF 6 INCHES. A 12-INCH MINIMUM BASE SLAB DEPTH IS REQUIRED.
5. EXISTING PIPE SHALL BE CUT ON THE OUTSIDE OF THE FUTURE MANHOLE WALL AND CONNECTED TO THE RISER SECTION USING A KOR-N-SEAL BOOT, OR APPROVED EQUAL.
6. MANHOLE BASE CANNOT BE POURED OVER EXISTING PIPE AND THEN THE TOP OF THE PIPE REMOVED TO EXPOSE THE SANITARY SEWER.

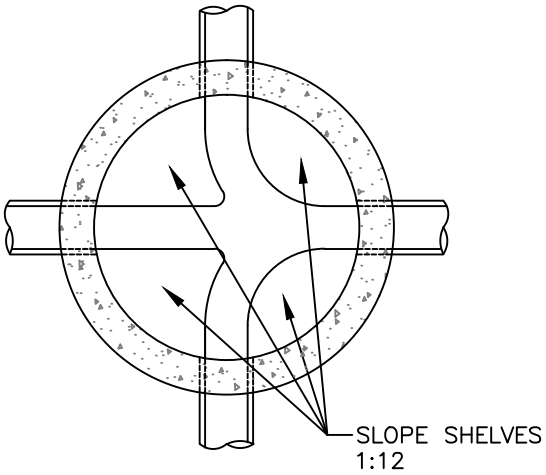

PLAN VIEW

CITY OF MILWAUKIE, OREGON – PUBLIC WORKS DEPT.

Poured-in-Place Sanitary Sewer Manhole Base

DRAWING NO. 302

APPROVED Gary Parkin 12/12

CITY ENGINEER DATE

NO.	REVISIONS	DATE	BY
1	REMOVED MESH AS REINFORCEMENT	10/09	JLR
2	GENERAL FORMATTING	12/10	MCP
3	CHANGED DRAWING NO., UPDATE DRAWING	12/12	MCP

DEC 2012

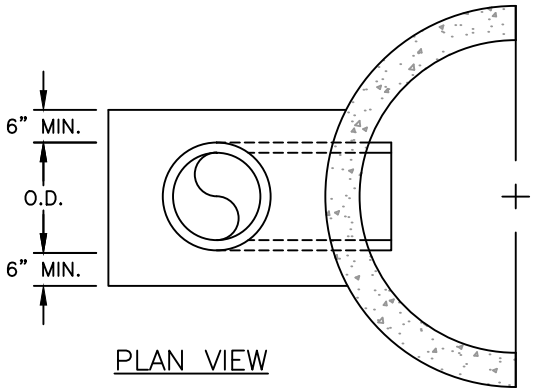

PLAN VIEW

NOTES:

1. OUTSIDE DROP PIPE MATERIAL SHALL MATCH THAT SHOWN IN THE PLANS OR SPECIFICATIONS, OR AS DIRECTED BY THE CITY ENGINEER.
2. OUTSIDE DROP SHOWN IS FOR PRECAST MANHOLE BASE. OUTSIDE DROPS FOR POURED-IN-PLACE MANHOLE BASES ARE ALLOWED.
3. CONNECTION TO NEW MANHOLES SHALL BE MADE WITH A KOR-N-SEAL BOOT, OR APPROVED EQUAL. CONNECTION TO EXISTING MANHOLES SHALL BE MADE WITH A SANDED COLLAR.
4. OUTSIDE DROP PIPE FITTINGS SHALL BE SAME SIZE AND MATERIAL AS SEWER MAIN. ONLY PRE-FORMED, GASKETED FITTINGS SHALL BE USED.
5. MAXIMUM SIZE PIPE FOR OUTSIDE DROP SHALL BE 12 INCHES.

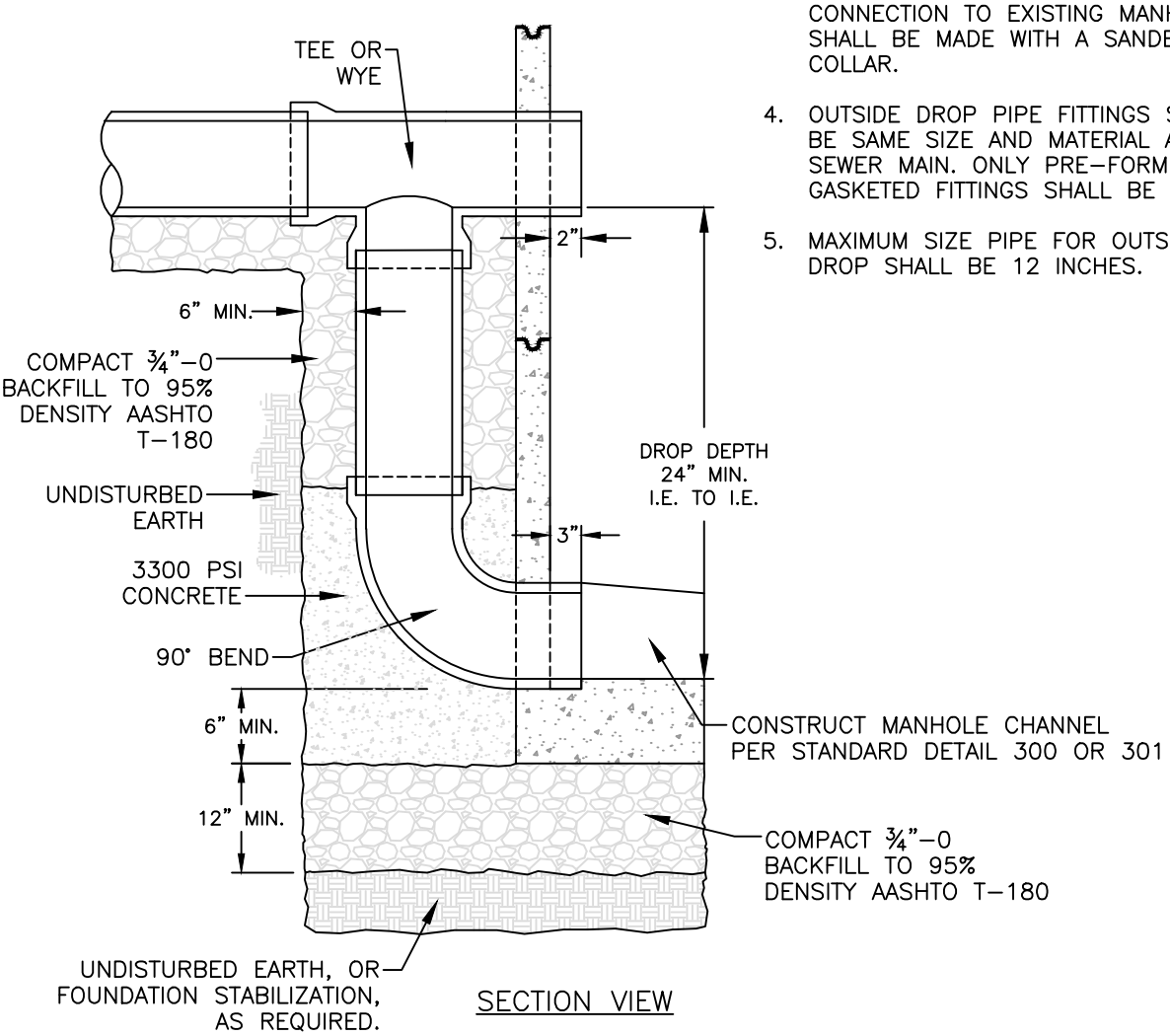

SECTION VIEW

CITY OF MILWAUKIE, OREGON – PUBLIC WORKS DEPT.

Outside Drop Manhole

DRAWING NO. **303**

APPROVED Gary Parkin 12/12

CITY ENGINEER DATE

NO.	REVISIONS	DATE	BY
1	REMOVED DAM, CLEAN-UP	10/09	GP
2	GENERAL FORMATTING, ADD NOTE 3	12/10	MCP
3	CHANGED DRAWING NO., UPDATE NOTES	12/12	MCP

DEC 2012

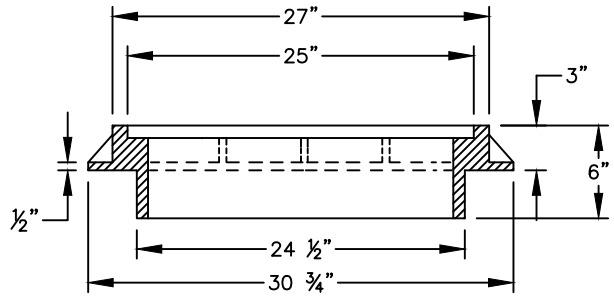

CAST IRON SUBURBAN
APPROX. WT. – 305 LBS

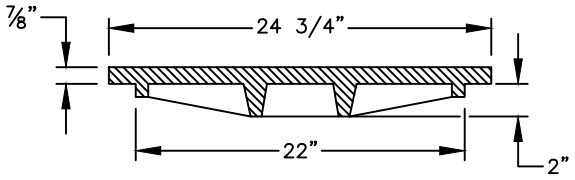

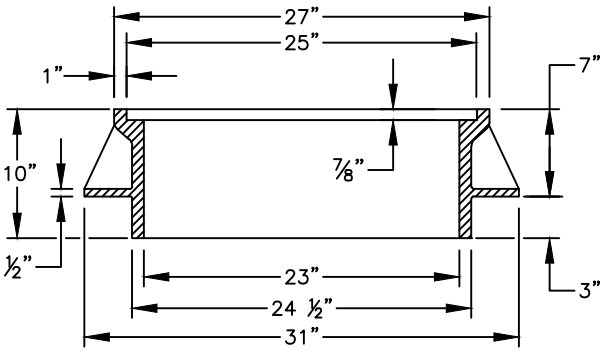

CAST IRON STANDARD
APPROX. WT. – 387 LBS

NOTES:

1. COVER AND FRAME TO BE MACHINED FOR TRUE BEARING.
2. MATERIAL SHALL BE GREY CAST IRON ASTM A–48 CLASS 30.
3. SUBURBAN FRAMES ARE ONLY AUTHORIZED TO BE USED IN NON–VEHICULAR AREAS.

LIDS MAY BE PURCHASED FROM THE CITY OR THE MANUFACTURER

CITY OF MILWAUKIE, OREGON – PUBLIC WORKS DEPT.

Sanitary Sewer Manhole Frame and Cover

DRAWING NO. **304**

APPROVED Gary Parkin 12/12
CITY ENGINEER DATE

NO.	REVISIONS	DATE	BY
1	CLEAN–UP	10/09	GP
2	GENERAL FORMATTING	12/10	MCP
3	DRAWING NO. CHANGE, PURCHASING NOTE	12/12	MCP

DEC 2012

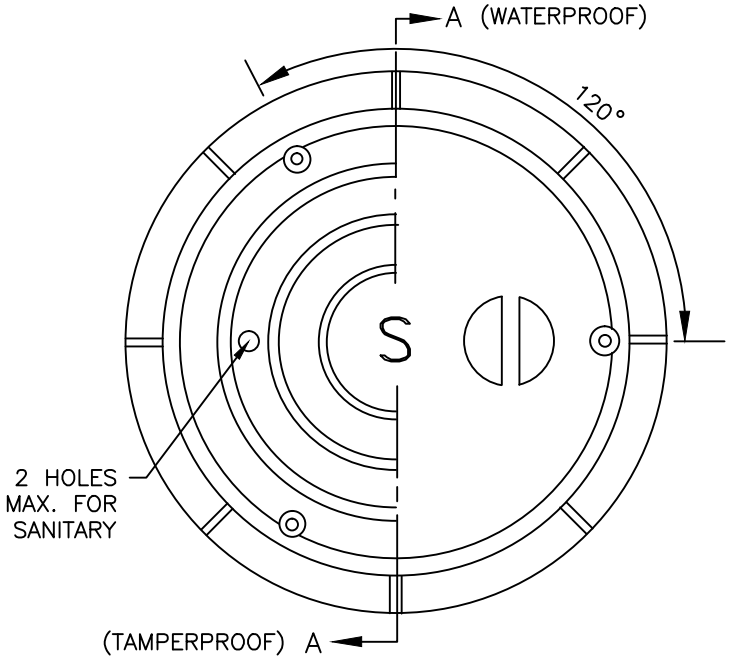

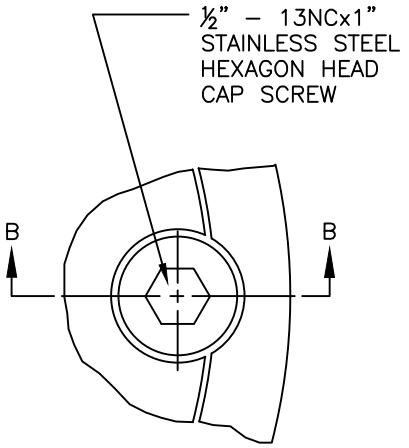

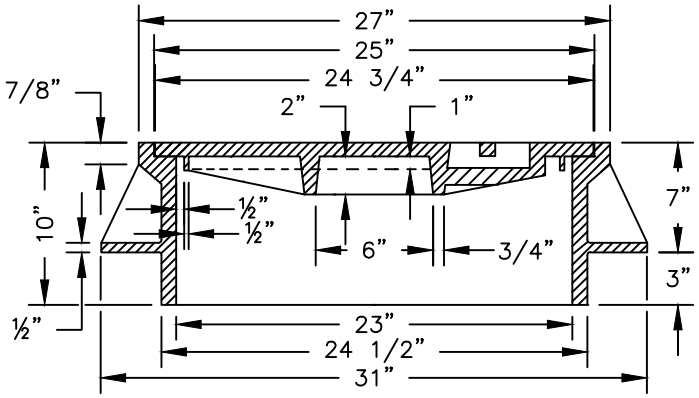

(FRAMES AVAILABLE IN STANDARD OR SUBURBAN)

SECTION A–A

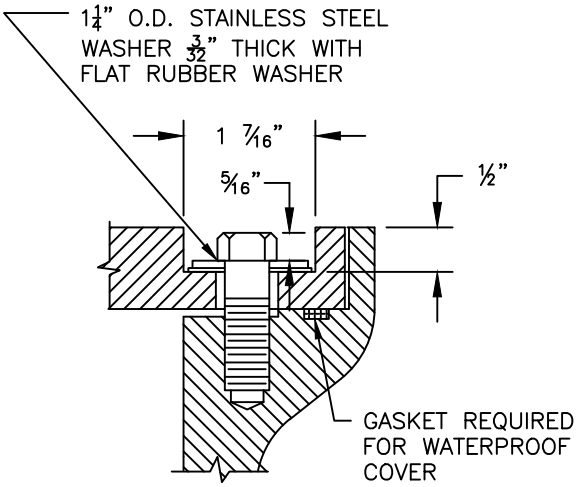

SECTION B–B

NOTES:

1. TAMPER PROOF COVERS REQUIRED ON SANITARY OR STORM MANHOLES LOCATED WITHIN UNIMPROVED EASEMENTS AND RIGHT–OF–WAY.
2. WATER TIGHT COVERS REQUIRED IF LOCATED WHERE COVER MAY BE SUBMERGED.
3. COVER AND FRAME TO BE MACHINED FOR TRUE BEARING.
4. MATERIAL SHALL BE GREY CAST IRON ASTM A–48 CLASS 30.

LIDS MAY BE PURCHASED FROM THE CITY OR THE MANUFACTURER

CITY OF MILWAUKIE, OREGON – PUBLIC WORKS DEPT.

Waterproof and Tamperproof Frame and Cover

DRAWING NO. 305

APPROVED Gary Parkin 12/12

CITY ENGINEER DATE

NO.	REVISIONS	DATE	BY
1	DELETION OF LOCATING STUD	01/10	JLR
2	GENERAL FORMATTING	12/10	MCP
3	DRAWING NO. CHANGE, PURCHASING NOTE	12/12	MCP

DEC 2012

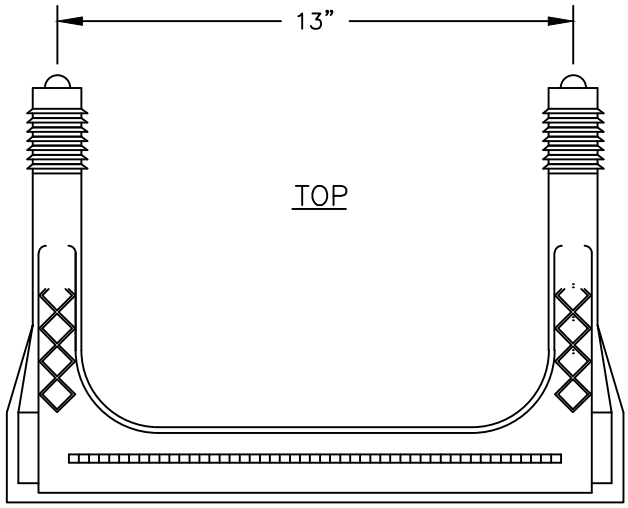

TOP

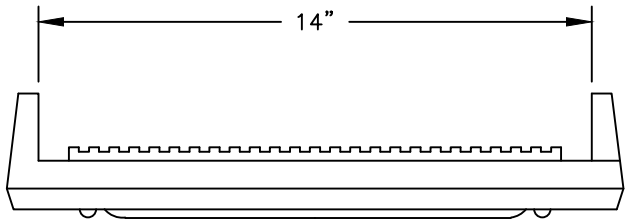

FRONT

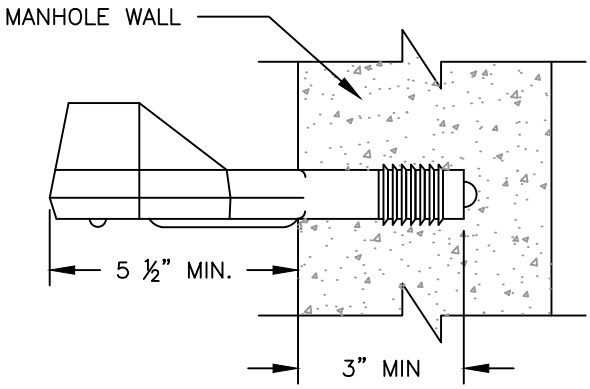

SIDE

NOTES:

1. STEPS SHALL BE DEFORMED STEEL REINFORCED POLYPROPYLENE PLASTIC CONFORMING WITH ASTM C478 AND ASTM A615.
2. ALL STEPS WITHIN A MANHOLE SHALL BE OF THE SAME DESIGN TYPE AND SIZE. (MIXING OF UNMATCHED STEPS WITHIN THE SAME MANHOLE IS NOT PERMITTED.)
3. LOOSE STEPS SHALL BE CAUSE FOR REJECTION OF THAT CONE OR SECTION.
4. STEPS ARE TO BE DRIVEN INTO PRE–FORMED HOLES IN PRECAST CONCRETE SECTIONS BY THE MANHOLE MANUFACTURER PRIOR TO DELIVERY TO THE JOB SITE.
5. MINIMUM HORIZONTAL PULLOUT LOAD SHALL BE 1500 LBS.
6. STEPS SHALL BE ALIGNED VERTICALLY.
7. STEPS SHALL BE SPACED 12" O.C.

CITY OF MILWAUKIE, OREGON – PUBLIC WORKS DEPT.

Manhole Step

DRAWING NO. **306**

APPROVED Gary Parkin 12/12

CITY ENGINEER DATE

NO.	REVISIONS	DATE	BY

DEC 2012

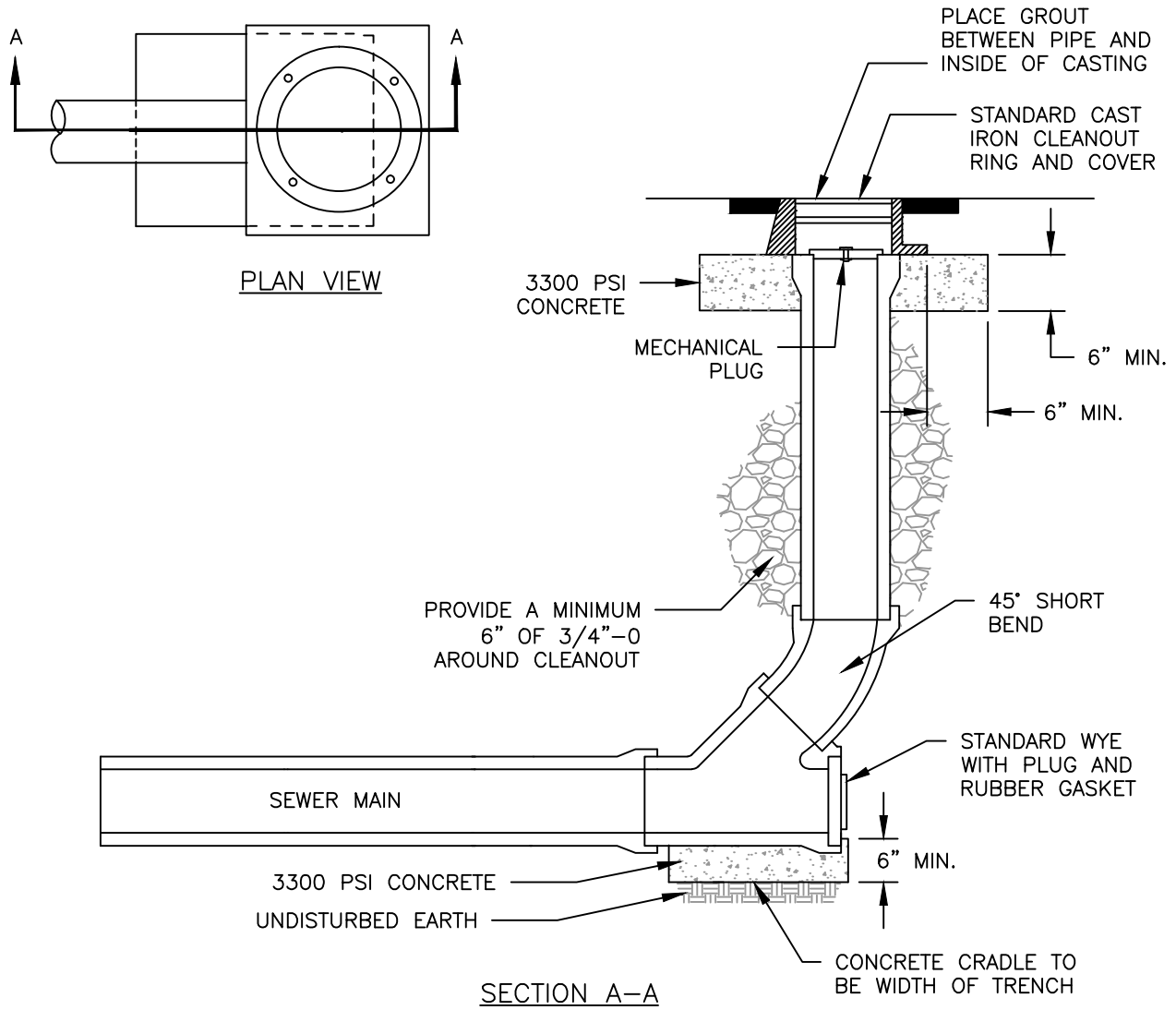

NOTES:

1. IF WITHIN GRAVEL STREET, PLACE 2" ASPHALT PAVEMENT IN 4' DIAMETER CIRCLE AROUND CLEAN OUT. SLOPE AWAY FROM CLEAN-OUT.
2. IF WITHIN AREA NOT SUBJECT TO STREET USE, USE LOCKING IRRIGATION BOX.
3. UNLESS OTHERWISE APPROVED BY THE CITY ENGINEER, CLEAN-OUTS ARE TO BE USED ONLY AS A TEMPORARY TERMINUS.
4. ALL CLEAN-OUT MATERIAL TO BE SAME AS SEWER MAIN PIPE.
5. ALL FITTINGS SHALL BE PRE-FORMED AND GASKETED.

CITY OF MILWAUKIE, OREGON – PUBLIC WORKS DEPT.

Standard Cleanout

DRAWING NO. 307

APPROVED Gary Parkin 12/12

CITY ENGINEER DATE

NO.	REVISIONS	DATE	BY
1	CLARIFIED DWG	12/09	JLR
2	GENERAL FORMATTING, ADD NOTE 5	12/10	MCP
3	GENERAL FORMATTING, 3300 PSI CONCRETE	12/12	MCP

DEC 2012

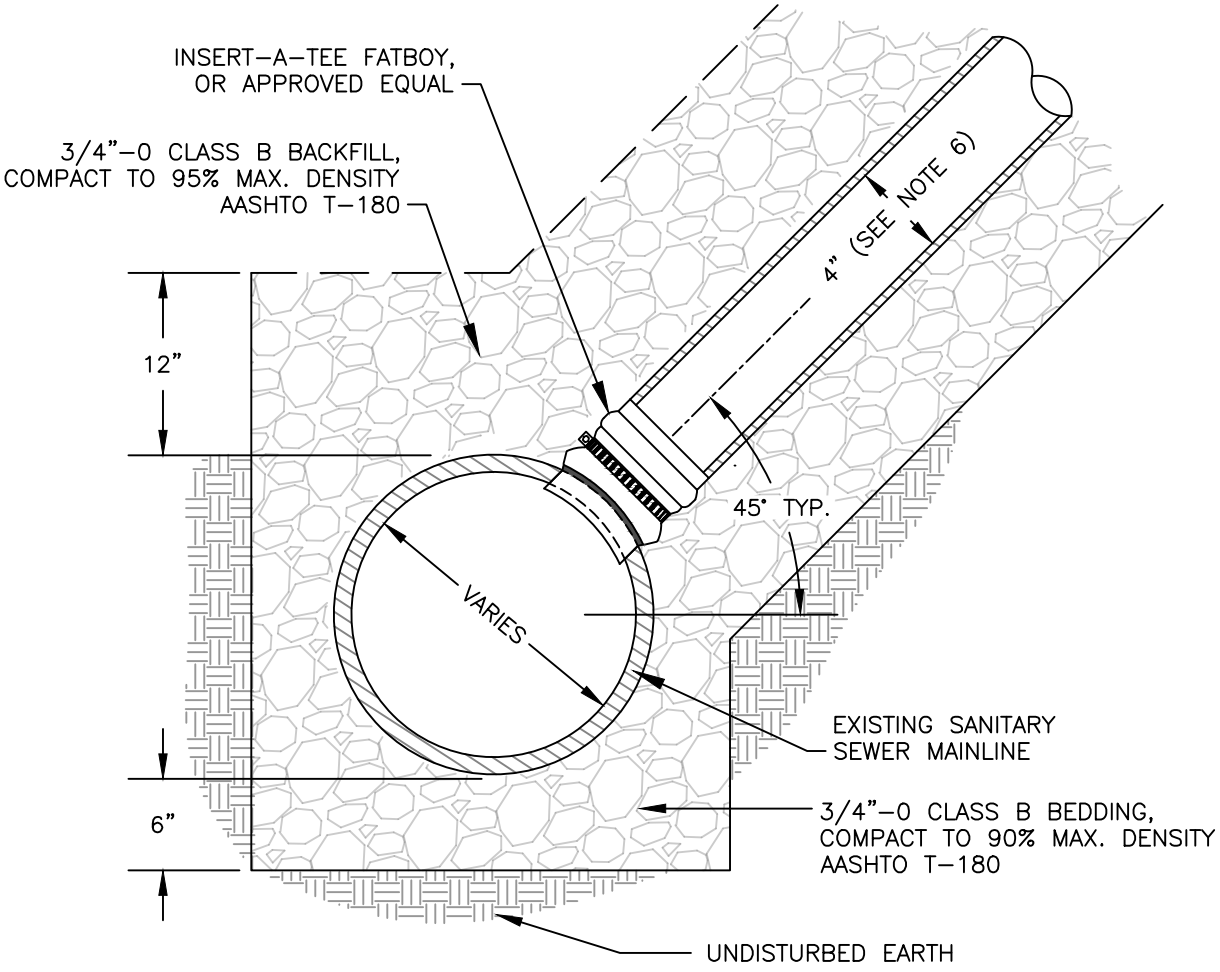

NOTES:

1. THE SEWER TAP SHALL NOT BE MADE EXCEPT IN THE PRESENCE OF A CITY INSPECTOR NOR SHALL ANY CONNECTION BE MADE WITHOUT CITY APPROVAL.
2. AN INSERT–A–TEE FATBOY OR APPROVED EQUAL SHALL BE USED. HDPE ELECTROFUSION TEE OR WYE MAY BE REQUIRED ON HDPE SANITARY SEWER MAINLINES.
3. HOLE IN MAIN TO BE MACHINE DRILLED AND CORED.
4. SEWER TAP TO BE ABOVE SPRINGLINE.
5. 4" MAXIMUM TAP FOR 8" MAIN WITH APPROVED COUPLERS (CUT–IN TEE TO BE USED FOR 6" HOUSE BRANCH ON 8" MAIN)
6. 4" HOUSE BRANCH MAY BE USED FOR SINGLE FAMILY LOTS ONLY.

CITY OF MILWAUKIE, OREGON – PUBLIC WORKS DEPT.

Standard Sewer Tap

DRAWING NO. **308**

APPROVED Gary Parkin 12/12
CITY ENGINEER DATE

NO.	REVISIONS	DATE	BY
2	GENERAL FORMATTING	12/10	MCP
3	ADDED BACKFILL COMPACTION NOTES	12/11	MCP
4	ADDED INSERT–A–TEE, ADDED HDPE NOTES	12/12	MCP

DEC 2012

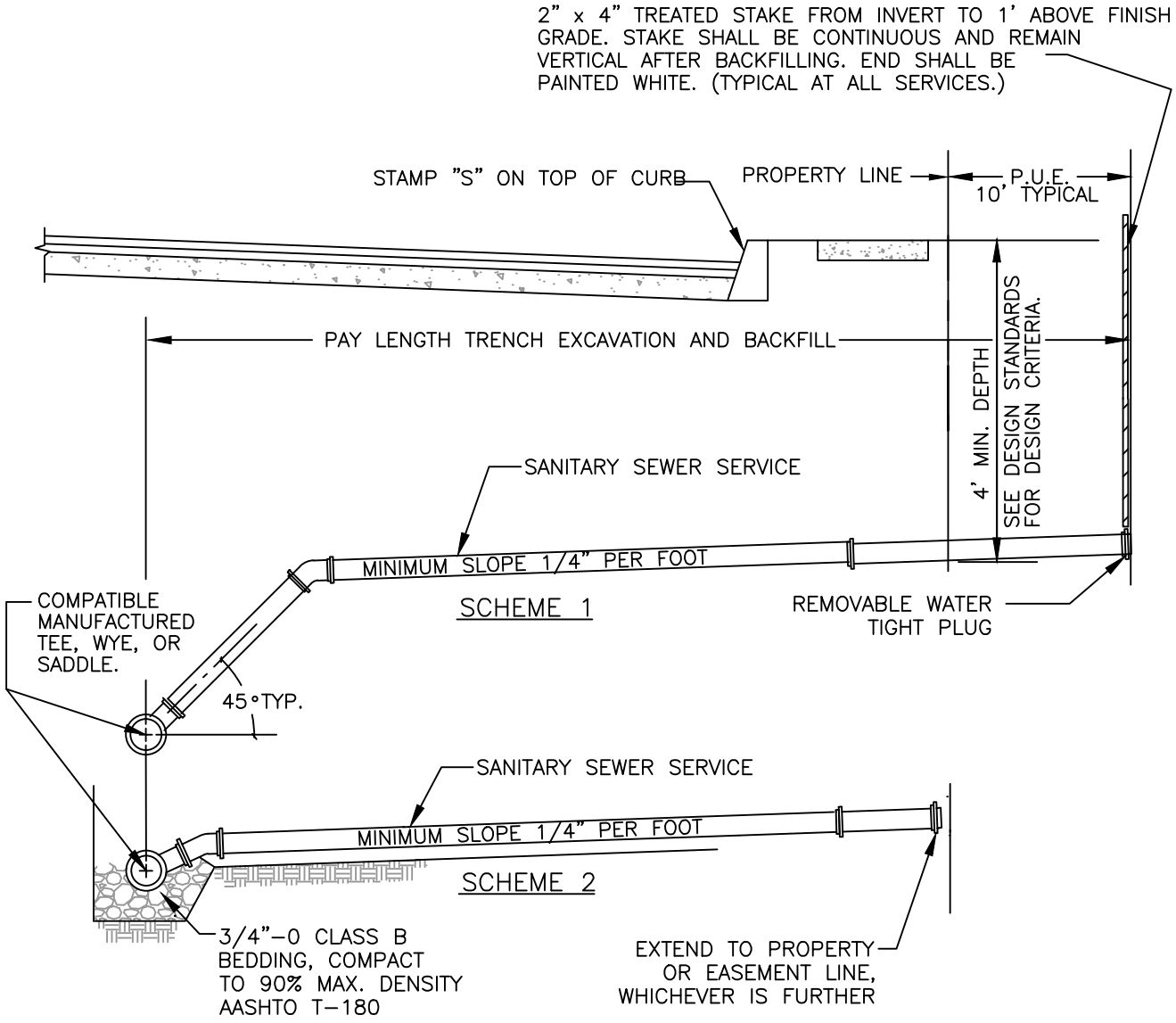

NOTES:

1. SCHEME AND DEPTH FOR HOUSE SERVICE TO BE DETERMINED IN THE FIELD BY ENGINEER.
2. SERVICE SHALL NOT BE BACKFILLED PRIOR TO INSPECTION.
3. INSTALL TRACER WIRE (GREEN, 18 GAUGE, INSULATED COPPER) FROM MAINLINE TO SURFACE AT 2" x 4" STAKE.
4. ALL FITTINGS SHALL BE PRE-FORMED AND GASKETED.

CITY OF MILWAUKIE, OREGON – PUBLIC WORKS DEPT.

Sewer Service Branch

DRAWING NO. **309**

APPROVED Gary Parkin 12/12

CITY ENGINEER DATE

NO.	REVISIONS	DATE	BY
1	REMOVED PIPE BEND LEADER, ADD NOTE 4	12/10	MCP
2	ADDED BACKFILL COMPACTION NOTES	12/11	MCP
3	CHANGED WORDING ON NOTES	12/12	MCP

DEC 2012

NOTES:

1. HYDRANTS TO BE WATEROUS WB67, MUELLER CENTURION A423, M&H 929 RELIANT, OR CLOW MEDALLION F2545 WITH 1 ½" OPERATING NUTS.
2. HYDRANT COLOR TO BE MILLER EQUIP. ENAMEL OE 40 (SAFETY YELLOW).
3. JOINTS TO BE RESTRAINED BY ¾" DIA. GALVANIZED STEEL RODS AND THRUST BLOCKS OR MEGA LUGS AND THRUST BLOCKS.
4. ALL FITTINGS IN CONTACT W/ CONCRETE SHALL BE WRAPPED IN PLASTIC. HYDRANT DRAIN HOLES TO REMAIN OPEN TO DRAIN ROCK AND OPERATIONAL.
5. MIN. 4 CU. FT. OF 2"–1" CLEAN DRAIN ROCK SHALL BE PLACED AROUND SHOE UP TO A MIN. OF 6" ABOVE DRAIN OUTLETS.
6. WHERE PLASTIC STRIP EXISTS, HYDRANT SHALL BE PLACED SO FRONT PORT IS A MINIMUM OF 24" BEHIND FACE OF CURB.
7. WHERE INTEGRAL SIDEWALK AND CURB EXISTS, HYDRANT SHALL BE PLACED AT BACK OF SIDEWALK, OR AS DIRECTED BY ENGINEER.
8. BURY OF HYDRANT SHALL BE MEASURED FROM FINISHED GRADE TO BOTTOM OF CONNECTING PIPE.
9. THRUST BLOCK AT FIRE HYDRANT TEE SHALL HAVE A 3.7 SQ. FT. BEARING AREA.
10. HYDRANT VALVE SHALL BE AMERICAN FLOW CONTROL SERIES 2500 OR APPROVED EQUAL.
11. WHERE NO SIDEWALK EXISTS, PLACE A 5'x5'x4" THICK CONCRETE APRON AROUND HYDRANT.
12. NO VERTICAL EXTENSIONS ALLOWED WITHOUT APPROVAL.

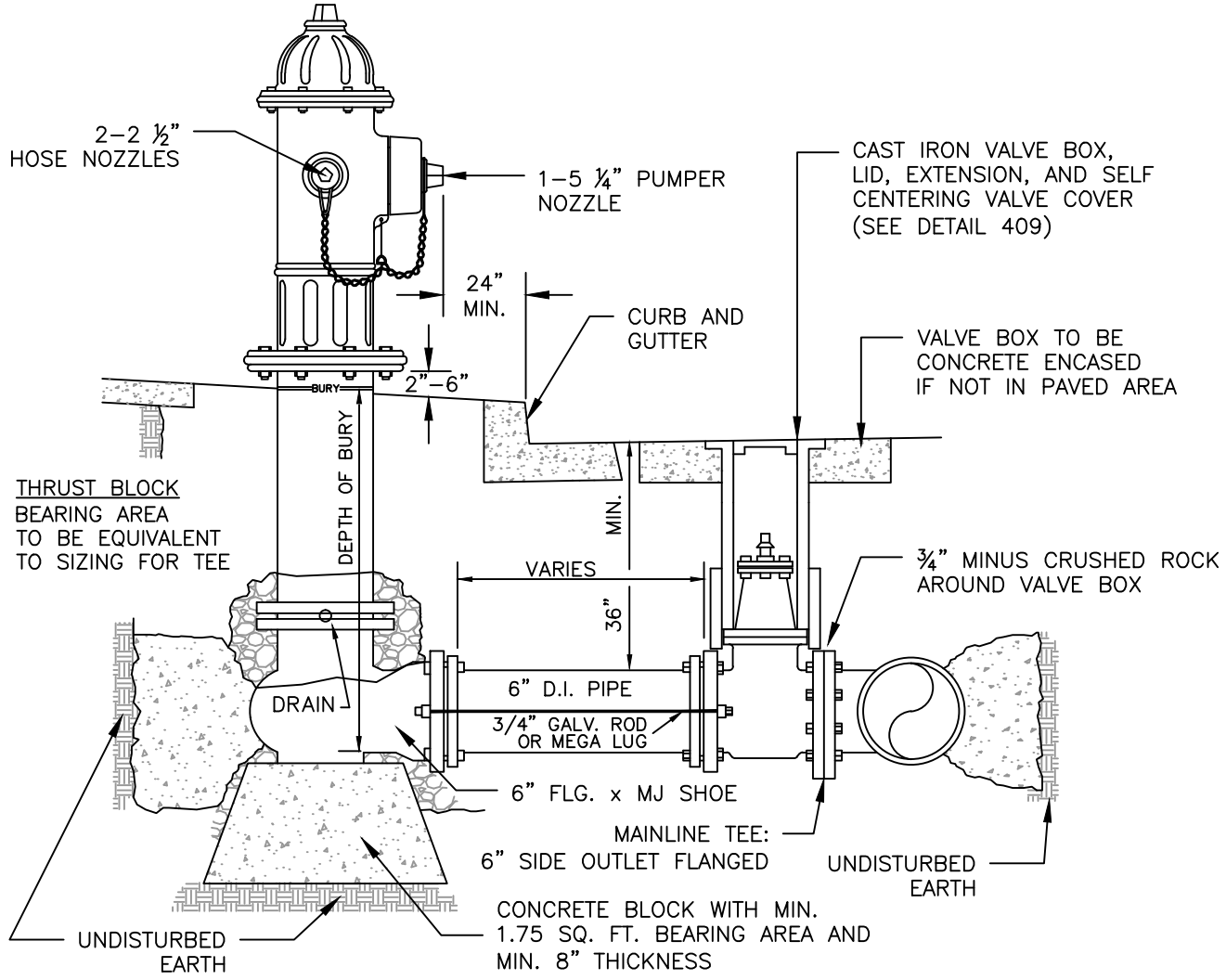

CITY OF MILWAUKIE, OREGON – PUBLIC WORKS DEPT.

Fire Hydrant Installation

DRAWING NO. 400

APPROVED Gary Parkin 12/12

CITY ENGINEER DATE

NO.	REVISIONS	DATE	BY
1	DRAWING REVISED	10/09	ZJW
2	EDIT HYDRANT VALVE TYPE, GEOTEXTILE	12/10	MCP
3	ADDED DIMENSIONS	12/12	MTC

DEC 2012

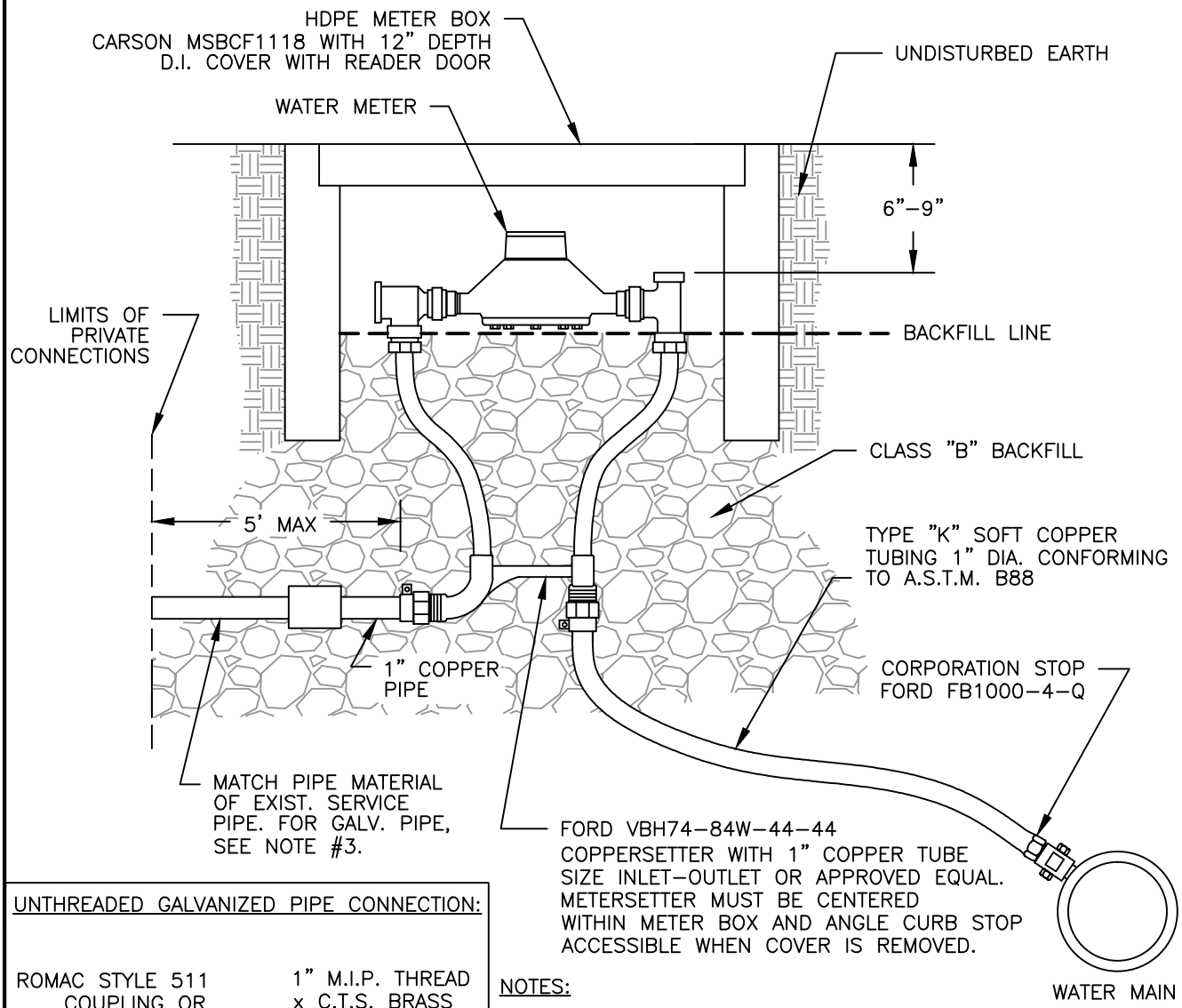

UNTHREADED GALVANIZED PIPE CONNECTION:

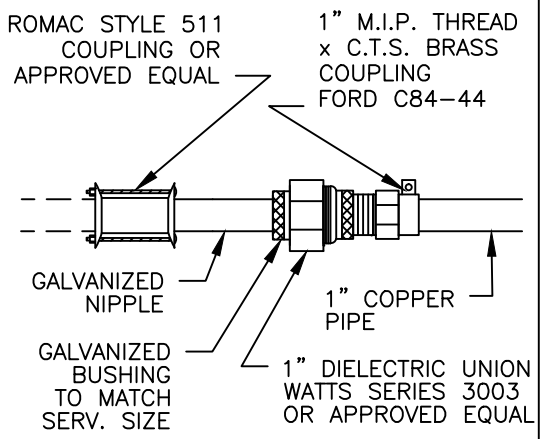

NOTES:

1. IF COPPER TUBING CROSSES CATHODICALLY PROTECTED LINE, ENCASE COPPER IN POLYETHYLENE TUBING FOR 24" (CENTERED AT THE CROSSING LINE) AND FASTEN WITH 2" WIDE ADHESIVE TAPE THAT IS COMPATIBLE WITH POLYETHYLENE.

2. PLACE METER BOXES (1) LOCATED BEHIND THE SIDEWALK WHERE THERE IS SUFFICIENT RIGHT–OF–WAY, (2) WITHIN THE PLANTER STRIP, EXCLUDING WATER QUALITY FACILITIES, (3) WITHIN THE SIDEWALK WITH THE BACK OF THE METER BOX AT THE BACK EDGE OF THE SIDEWALK.

3. CONNECT GALVANIZED SERVICE PIPE; (1) AT EXISTING THREADED FITTING WITHIN 5 FEET OF WATER METER; (2) RETHREAD EXISTING GALVANIZED SERVICE PIPE; (3) IF EXISTING PIPE IS IN POOR CONDITION AND CANNOT BE RETHREADED, USE UNTHREADED GALVANIZED PIPE CONNECTION DETAIL.

MILWAUKIE, OREGON · FOUNDED 1847

CITY OF MILWAUKIE, OREGON – PUBLIC WORKS DEPT.

Standard 1 Inch Water Service

DRAWING NO. **401**

APPROVED Gary Parkin 12/12
CITY ENGINEER DATE

NO.	REVISIONS	DATE	BY
1	CURB STOP DEPTH, ADD PRIV. SIDE NOTES	12/10	MCP
2	CHANGED COPPERSETTER MODEL NUMBER	12/11	MCP
3	DRAWING REVISED	12/12	MTC

DEC 2012

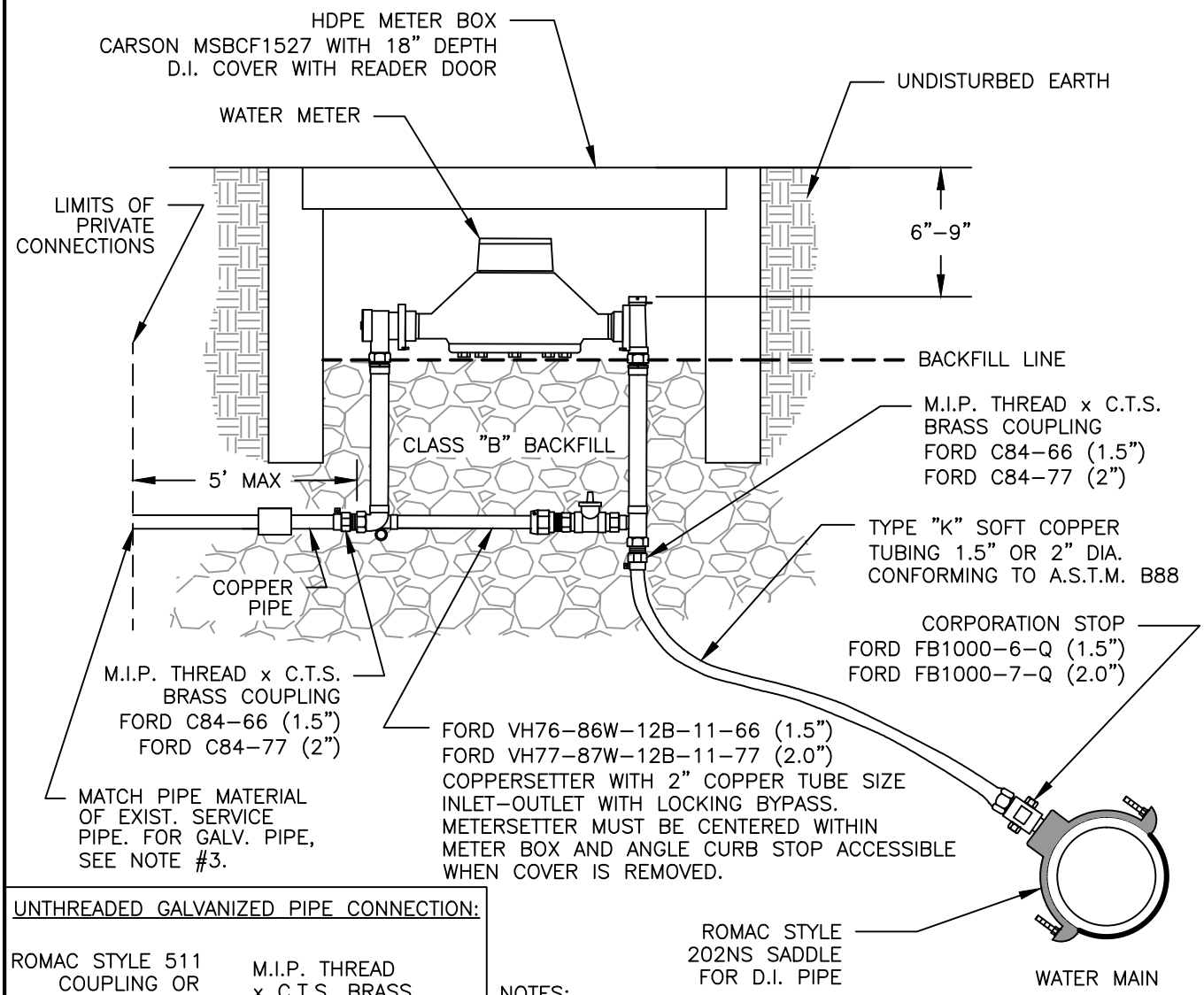

UNTHREADED GALVANIZED PIPE CONNECTION:

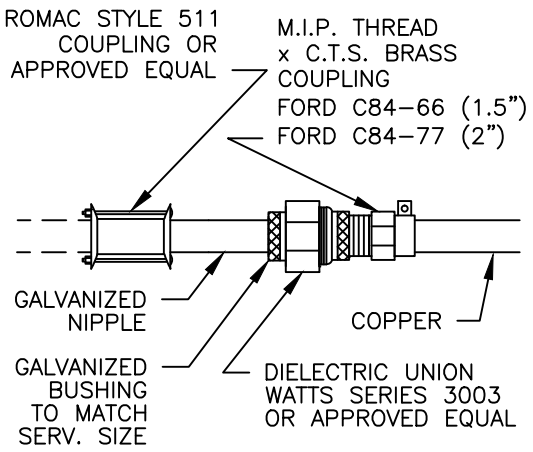

NOTES:

1. IF COPPER TUBING CROSSES CATHODICALLY PROTECTED LINE, ENCASE COPPER IN POLYETHYLENE TUBING FOR 24" (CENTERED AT THE CROSSING LINE) AND FASTEN WITH 2" WIDE ADHESIVE TAPE THAT IS COMPATIBLE WITH POLYETHYLENE.
2. PLACE METER BOXES (1) LOCATED BEHIND THE SIDEWALK WHERE THERE IS SUFFICIENT RIGHT–OF–WAY, (2) WITHIN THE PLANTER STRIP, EXCLUDING WATER QUALITY FACILITIES, (3) WITHIN THE SIDEWALK WITH THE BACK OF THE METER BOX AT THE BACK EDGE OF THE SIDEWALK.
3. CONNECT GALVANIZED SERVICE PIPE; (1) AT EXISTING THREADED FITTING WITHIN 5 FEET OF WATER METER; (2) RETHREAD EXISTING GALVANIZED SERVICE PIPE; (3) IF EXISTING PIPE IS IN POOR CONDITION AND CANNOT BE RETHREADED, USE UNTHREADED GALVANIZED PIPE CONNECTION DETAIL.

CITY OF MILWAUKIE, OREGON – PUBLIC WORKS DEPT.

Standard 1.5 – 2 Inch Water Service

DRAWING NO. 402

APPROVED Gary Parkin 12/12
CITY ENGINEER DATE

NO.	REVISIONS	DATE	BY
1	CURB STOP DEPTH, ADD PRIV. SIDE NOTES	12/10	MCP
2	CHANGED COPPERSETTER MODEL NUMBER	12/11	MCP
3	DRAWING REVISED	12/12	MTC

DEC 2012

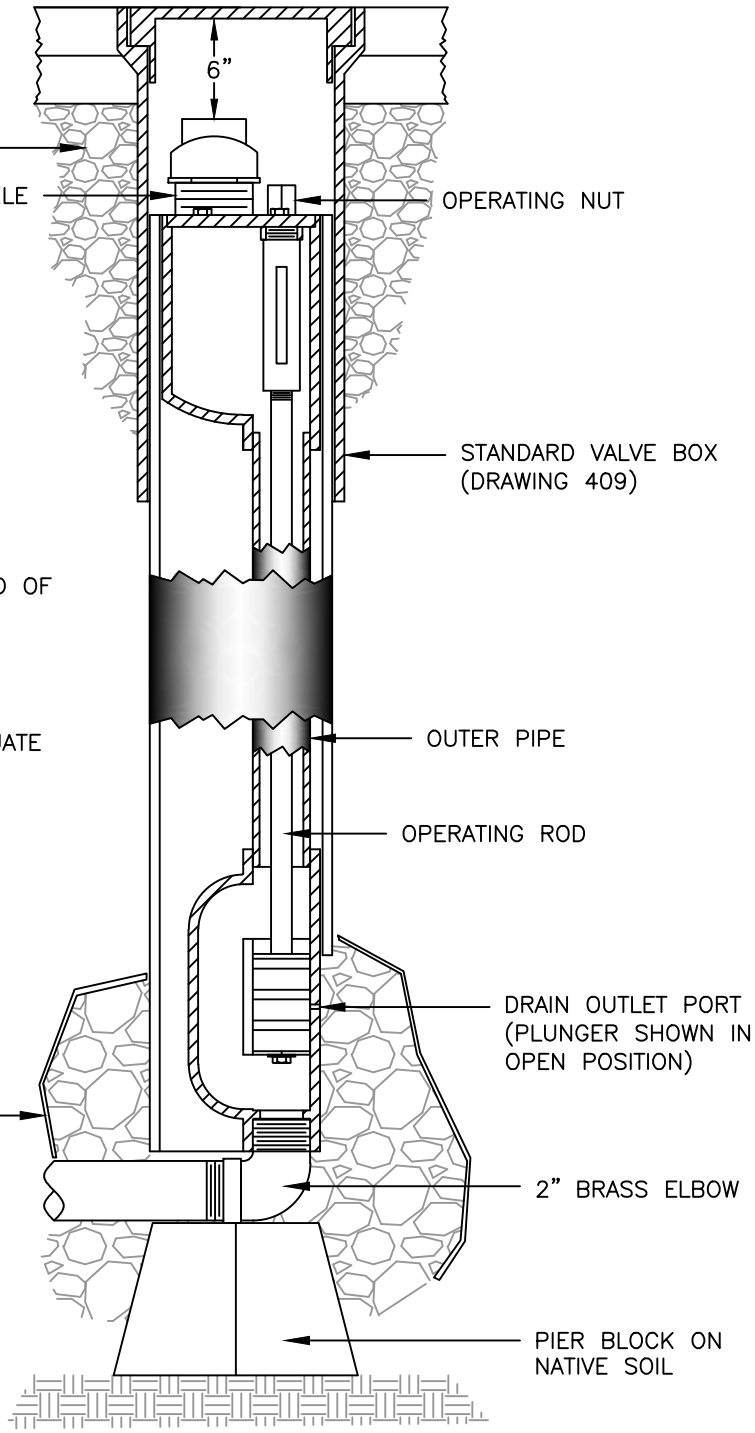

NOTES:

1. USE TRUFLO MODEL TF500 2" BLOWOFF/FLUSHING HYDRANT OR APPROVED EQUAL, SPECIFY BURY DEPTH.
2. IF BLOWOFF IS INSTALLED IN AN OFFROAD SITUATION, 5'X5'X4" PAD OF ASPHALT MUST BE CONSTRUCTED AROUND THE VALUE CAN LID.
3. SURROUND DRAIN PORT WITH SUFFICIENT AMOUNT OF CRUSHED ROCK/GRAVEL TO PROVIDE ADEQUATE DRAINAGE.

CITY OF MILWAUKIE, OREGON – PUBLIC WORKS DEPT.

Standard 2 Inch Blow–Off Assembly

DRAWING NO. 403

APPROVED Gary Parkin 12/12

CITY ENGINEER DATE

NO.	REVISIONS	DATE	BY
1	EDIT ROCK SIZE, DRAINAGE GEOTEXTILE	12/10	MCP

DEC 2012

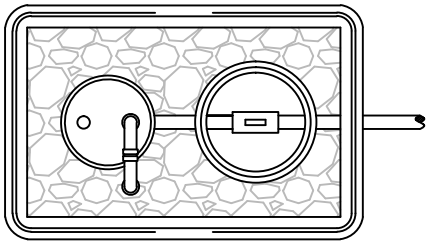

PLAN VIEW

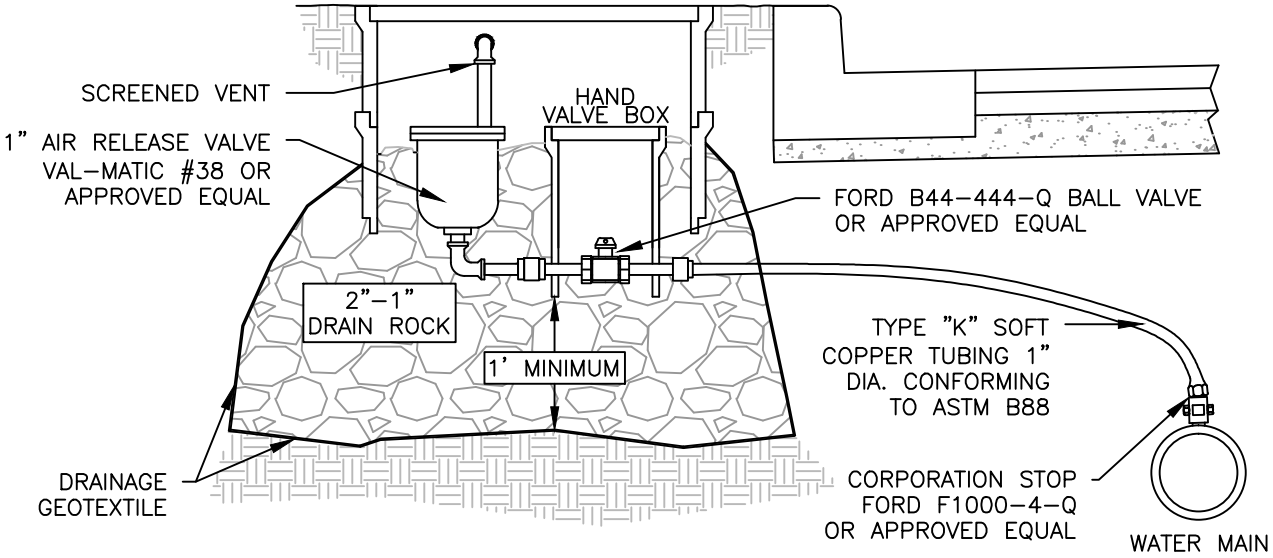

PROFILE VIEW

NOTES:

1. AIR RELEASE ASSEMBLY TO BE INSTALLED IN TWO STACKED 17" X 30" HDPE METER BOXES WITH 2" THICK D.I. COVER. CARSON OR APPROVED EQUAL.
2. BED WITH WASHED GRAVEL, PASSING 2" RETAINED ON 1/4" MESH.
3. FITTINGS SHALL BE COMPRESSION AND/OR NATIONAL PIPE THREAD (NPT).
4. ALL WATER LINE WITHIN BOX SHALL BE COPPER OR BRASS.

CITY OF MILWAUKIE, OREGON – PUBLIC WORKS DEPT.

Standard Air Release Valve Unit

DRAWING NO. 404

APPROVED Gary Parkin 12/12

CITY ENGINEER DATE

NO.	REVISIONS	DATE	BY
1	DRAWING REVISED	10/09	ZJW
2	EDIT ROCK SIZE, DRAINAGE GEOTEXTILE	12/10	MCP
3	CHANGED METER BOX TYPE	12/11	MCP

DEC 2012

(HORIZONTAL) BEARING AREA OF THRUST BLOCKS IN SQUARE FEET									(VERTICAL) VOLUME OF THRUST BLOCK IN CUBIC YARDS			
FITTING SIZE	TEE, WYE, DEAD END AND HYDRANT	STRADDLE BLOCK	90° BEND PLUGGED CROSS	TEE PLUGGED ON RUN		45° BEND	22-1/2° BEND	11-1/4° BEND	90° BEND	45° BEND	22-1/2° BEND	11-1/4° BEND
				A-1	A-2							
4	1.0	1.6	1.4	1.9	1.4	1.0	---	---	---	---	---	---
6	2.1	3.7	3.0	4.3	3.0	1.6	1.0	---	1.3	---	---	---
8	3.8	6.5	5.3	7.6	5.4	2.9	1.5	1.0	2.3	1.1	---	---
10	5.9	10.2	8.4	11.8	8.4	4.6	2.4	1.2	3.7	1.8	---	---
12	8.5	14.7	12.0	17.0	12.0	6.6	3.4	1.7	5.5	2.8	1.2	---
14	11.5	---	16.3	23.0	16.3	8.9	4.6	2.3	7.6	3.9	1.7	---
16	15.0	26.1	21.3	30.0	21.3	11.6	6.0	3.0	9.9	5.1	2.3	0.9
18	19.0	---	27.0	38.0	27.0	14.6	7.6	3.8	---	---	---	---
20	23.5	40.8	33.3	47.0	33.3	18.1	9.4	4.7	---	---	---	---
24	34.0	58.8	48.0	68.0	48.0	26.2	13.6	6.8	---	---	---	---

NOTES:

1. ABOVE BEARING AREAS BASED ON TEST PRESSURE OF 150 PSI AND AN ALLOWABLE SOIL BEARING STRESS OF 2000 POUNDS PER SQUARE FOOT. TO COMPUTE BEARING AREAS FOR DIFFERENT TEST PRESSURES AND SOIL BEARING STRESSES, USE THE FOLLOWING EQUATION:

   BEARING AREA = (TEST PRESSURE / 150) x (2000 / SOIL BEARING STRESS) x (TABLE VALUE)

2. ABOVE VOLUMES BASED ON TEST PRESSURE OF 150 PSI AND THE WEIGHT OF CONCRETE = 4050 POUNDS PER CUBIC YARD. TO COMPUTE FOR DIFFERENT TEST PRESSURES, USE THE FOLLOWING EQUATION:

   VOLUME = (TEST PRESSURE / 150) x (TABLE VALUE)

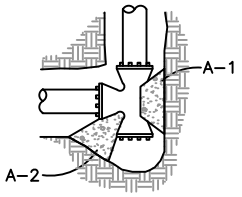

TEE

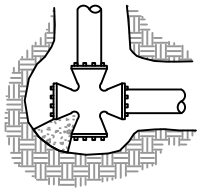

CROSS

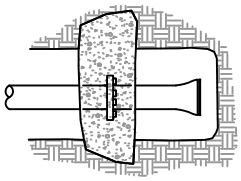

STRADDLE BLOCK

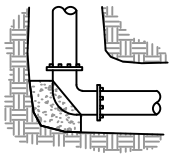

BEND

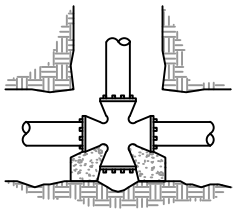

CROSS

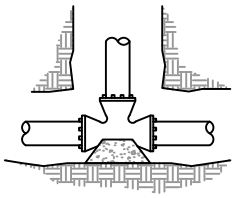

TEE

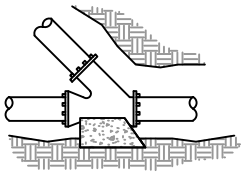

WYE

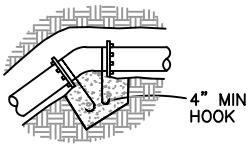

VERTICAL BEND

RODS FOR VERTICAL BENDS		
FITTING SIZE	ROD SIZE	EMBEDMENT
12" AND LESS	#6	30"
14"-16"	#8	36"

1. CONCRETE BLOCKING TO BE POURED AGAINST UNDISTURBED EARTH.
2. ALL CONCRETE TO BE CLASS 2400 MINIMUM.
3. INSTALL ISOLATION MATERIAL BETWEEN PIPE AND/OR FITTINGS BEFORE POURING CONCRETE BLOCKING.
4. CONCRETE SHALL BE KEPT CLEAR OF ALL JOINTS AND ACCESSORIES.
5. TIE RODS SHALL BE DEFORMED GALVANIZED COLD ROLLED STEEL, 40 KSI TENSILE STRENGTH.

MILWAUKIE, OREGON FOUNDED 1847

CITY OF MILWAUKIE, OREGON – PUBLIC WORKS DEPT.

Thrust Blocking

DRAWING NO. 405

APPROVED Gary Parkin 12/12

CITY ENGINEER DATE

NO.	REVISIONS	DATE	BY

DEC 2012

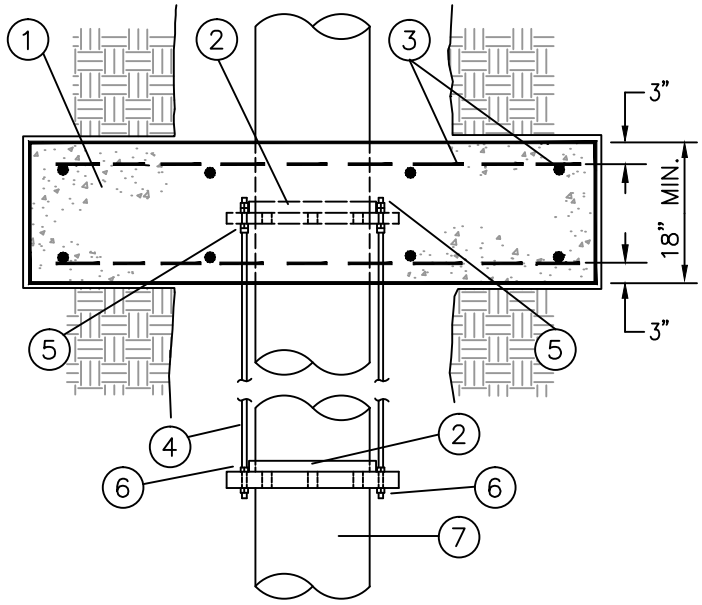

PLAN VIEW

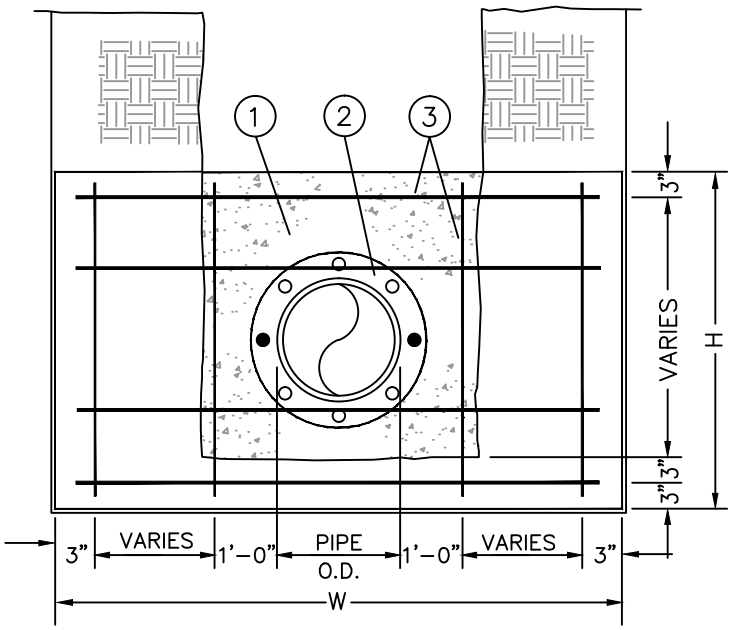

FRONT VIEW

MATERIALS:

1. CONCRETE STRADDLE BLOCK.
2. UNI-FLANGE, SERIES 400C, CLASS 125.
3. #4 REBAR EACH WAY, 12" O.C.
4. ¾" ALL THREAD GALVANIZED STEEL TIE RODS, QUANTITY PER ENGINEER.
5. ¾" GALVANIZED NUTS, 2-EACH SIDE.
6. ¾" GALVANIZED NUTS, 1-EACH SIDE.
7. FLANGED FITTING.

NOTES:

1. STRADDLE BLOCKS SHALL BE DESIGNED INDIVIDUALLY BY THE ENGINEER AND SHALL BE BASED ON THE FOLLOWING:
   - 200 PSI WATER PRESSURE
   - SOIL BRG. CAPACITY, STEEL SIZE AND SPACING BY THE ENGINEER.
2. BEARING AREA OF BLOCK SHALL BE AGAINST UNDISTURBED SOIL.
3. STRADDLE BLOCK SHALL HAVE A MINIMUM OF 18" COVER.
4. CONCRETE SHALL BE A MIN. 28-DAY STRENGTH OF 3300 PSI.
5. ALL FITTINGS WITHIN THE CONC. SHALL BE WRAPPED IN PLASTIC.
6. STRADDLE BLOCK HEIGHT (H) & WIDTH (W) SHALL BE DETERMINED BY THE ENGINEER.

CITY OF MILWAUKIE, OREGON – PUBLIC WORKS DEPT.

Standard Straddle Block

DRAWING NO. **406**

APPROVED Gary Parkin 12/12
CITY ENGINEER DATE

NO.	REVISIONS	DATE	BY
1	GENERAL FORMATTING	12/10	MCP

DEC 2012

ZONE 1: ONLY CROSSING RESTRICTIONS APPLY
ZONE 2: CASE–BY–CASE DETERMINATION
ZONE 3: PARALLEL TO WASTEWATER PROHIBITED

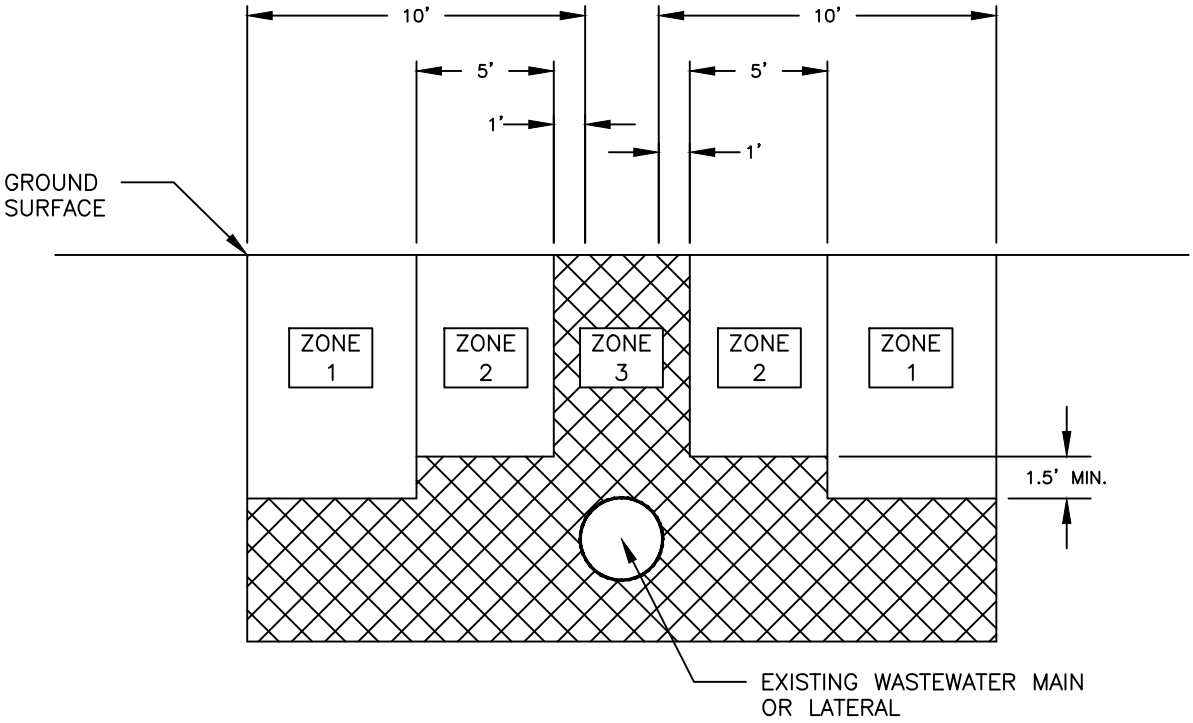

NOTES:

1. WHERE THE PROPOSED WATERLINE WILL BE INSTALLED PARALLEL TO AN EXISTING GRAVITY SANITARY SEWER MAIN OR LATERAL LINE, THE SEPARATION BETWEEN THE TWO SHALL BE AS INDICATED ABOVE.

2. CROSSINGS

   A. WHEREVER POSSIBLE, THE BOTTOM OF THE WATERLINE SHALL BE 1.5 FEET ABOVE THE TOP OF THE SEWER LINE, AND ONE FULL LENGTH OF WATERLINE SHALL BE CENTERED AT THE CROSSING.
   B. WHERE IT IS NOT POSSIBLE FOR THE WATER LINE TO BE 1.5 FEET ABOVE THE SEWER LINE THE EXISTING SEWER LINE SHALL BE EXPOSED FOR A DISTANCE OF 10 FEET ON EACH SIDE OF THE CROSSING AND SHALL BE REPLACED WITH C–900 PVC, DR–18, DR–25 OR DUCTILE IRON PIPE AS APPROVED BY THE CITY ENGINEER AND A LENGTH OF WATER PIPE SHALL BE CENTERED AT THE CROSSING, OR AS APPROVED BY THE CITY ENGINEER.

CITY OF MILWAUKIE, OREGON – PUBLIC WORKS DEPT.

Standard Wastewater Crossing

DRAWING NO. 407

APPROVED Gary Parkin 12/12
CITY ENGINEER DATE

NO.	REVISIONS	DATE	BY
1	GENERAL FORMATTING	12/10	MCP

DEC 2012

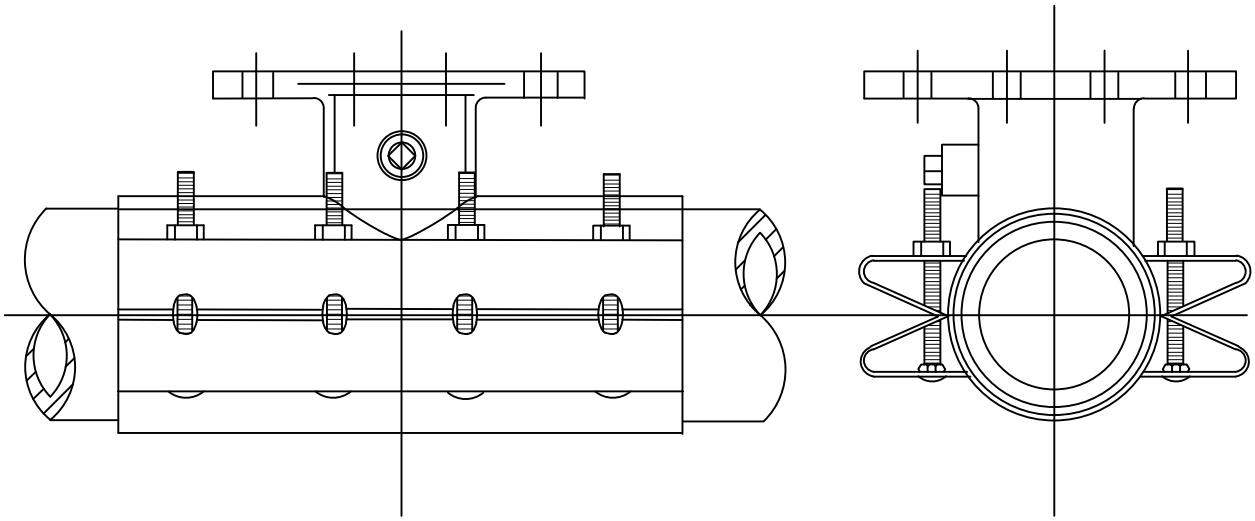

FRONT VIEW

SIDE VIEW

NOTES:

1. WATER MAIN SHALL BE CLEANED BEFORE ATTACHING SLEEVE.
2. SLEEVE AND VALVE SHALL BE PRESSURE TESTED BEFORE MAKING TAP.
3. PRESSURE TEST AND TAP SHALL BE MADE IN THE PRESENCE OF AN AUTHORIZED CITY REPRESENTATIVE.
4. PROPER TAPPING MACHINE SHALL BE USED TO MAKE TAP.
5. THRUST BLOCKING REQUIREMENTS SHALL BE DETERMINED BY THE ENGINEER OR PER DRAWING 405.
6. TAP SHALL BE MADE NO CLOSER THAN 18 INCHES FROM THE NEAREST JOINT.
7. SLEEVE AND VALVE SHALL BE WRAPPED IN 8 MIL PLASTIC.
8. SLEEVES TO BE USED ARE JCM OR MUELLER STAINLESS STEEL TAPPING SLEEVES. ALL NUTS AND BOLTS SHALL BE STAINLESS STEEL.
9. SLEEVE SHALL BE AS LEVEL AS POSSIBLE.
10. ALL BOLTS SHALL HAVE NEVER SEIZE ON THREADS.
11. FOR TAPS SMALLER THAN 2.5", SEE MILWAUKIE STANDARD DETAILS 401 AND 402.

CITY OF MILWAUKIE, OREGON – PUBLIC WORKS DEPT.

Standard Wet Tap 2.5 Inch and Larger

DRAWING NO. 408

APPROVED Gary Parkin 12/12

CITY ENGINEER DATE

NO.	REVISIONS	DATE	BY
1	GENERAL FORMATTING	12/10	MCP

DEC 2012

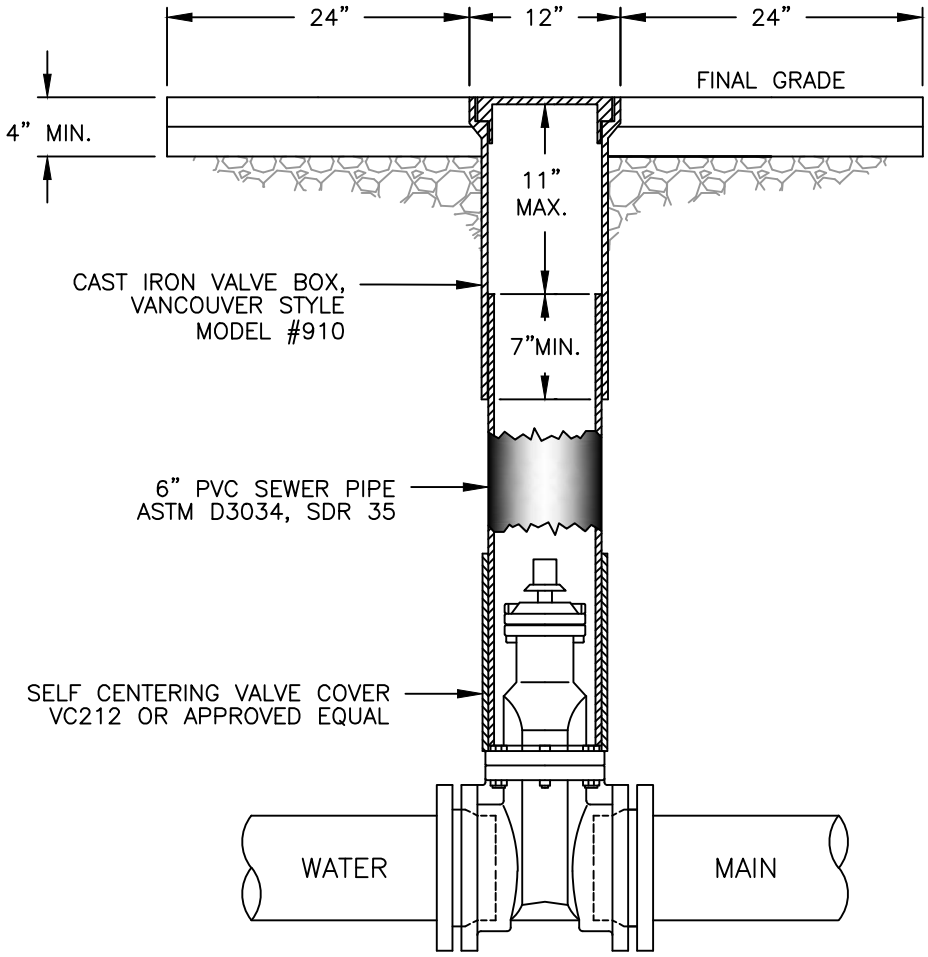

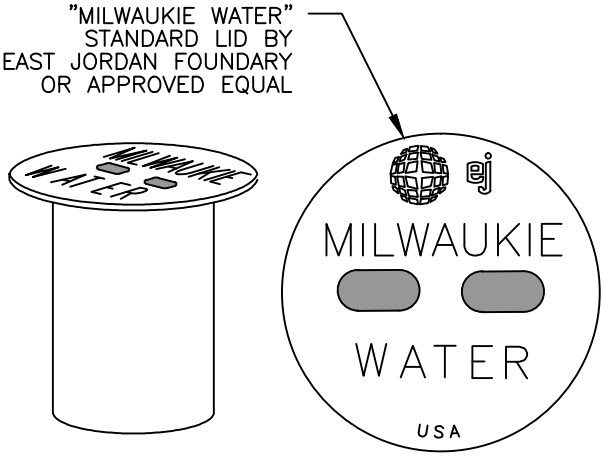

18" TALL VALVE BOX

NOTES:

1. VALVE BOXES SHALL BE CENTERED DIRECTLY OVER THE VALVE NUT IN A VERTICAL POSITION.
2. VALVE BOX TOP SHALL BE ADJUSTED TO MEET FINISHED GRADE.
3. PVC SHALL BE ONE CONTINUOUS PIECE – NO BELLS OR COUPLERS.
4. VALVE NUT EXTENSIONS SHALL BE USED TO BRING VALVE NUT WITHIN 4 FEET OF FINAL GRADE.
5. VALVE CAN SHALL BE ENCASED IN 2'x2' PAD IN UNIMPROVED AREAS. REPAIRS WITHIN PAVED STREET REQUIRE A MINIMUM 5'x5' ASPHALT PATCH.

CITY OF MILWAUKIE, OREGON – PUBLIC WORKS DEPT.

Standard Valve Box Detail

DRAWING NO. 409

APPROVED Gary Parkin 12/12
CITY ENGINEER DATE

NO.	REVISIONS	DATE	BY
1	DRAWING REVISED	10/09	ZJW
2	GENERAL FORMATTING	12/10	MCP
3	DRAWING REVISED; VALVE BOX REDRAWN	12/12	MTC

DEC 2012

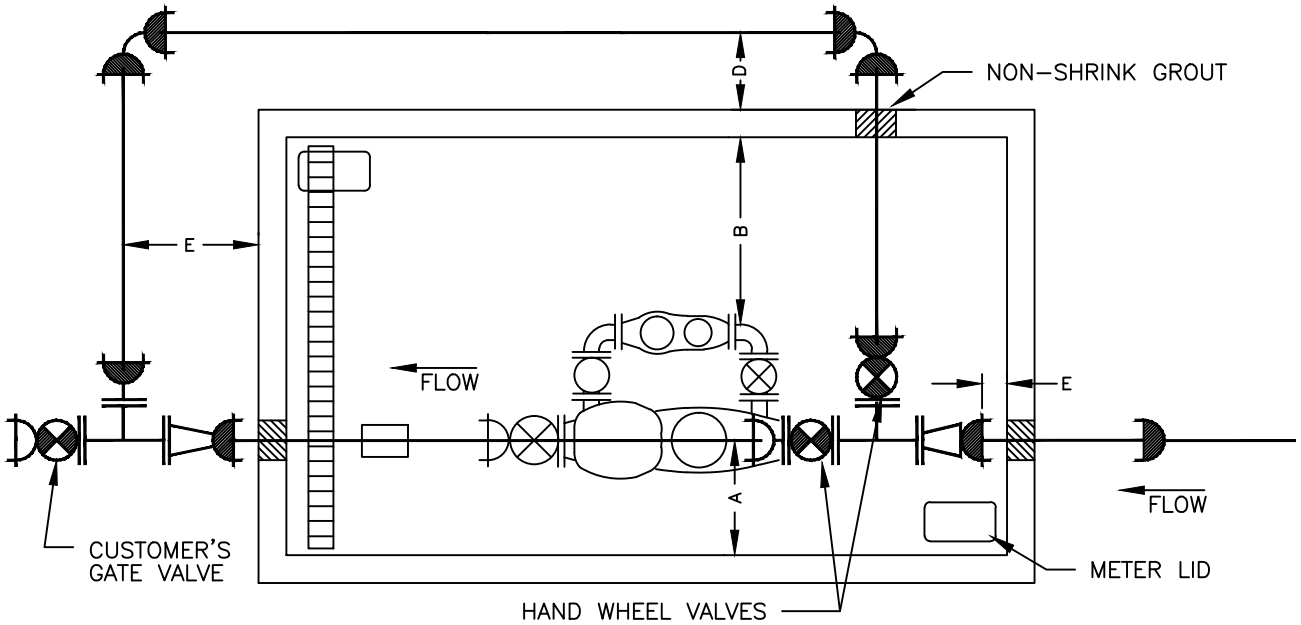

MECHANICAL JOINT WITH MEGALUG RETAINER GLAND (1100 SERIES)

PIPE BELL WITH MEGALUG HARNESS (1100HD SERIES)

METER	4 x 2	6 x 3	8 x 4	3" COMPOUND
INCOMING LINE SIZE	6"	8"	10"	4"
BYPASS LINE SIZE	4"	4"	6"	2" CU
UTILITY VAULT NUMBER	810-LA	712-LA	816-LA	687-LA
A*	24"	18"	18"	24"
B*	36"	36"	36"	24"
C*	12"	12"	12"	12"
D*	24"	24"	26"	24"
E*	24"	28"	30"	24"

* MEASUREMENTS A-E ARE MINIMUMS AND MUST BE MET FOR APPROVAL.

CITY OF MILWAUKIE, OREGON - PUBLIC WORKS DEPT.

Standard Hersey MFM-MCT Compound Meter

DRAWING NO. **410A**

APPROVED Gary Parkin 12/12

CITY ENGINEER DATE

NO.	REVISIONS	DATE	BY

DEC 2012

NOTES:

1. METER TO BE INSTALLED BY THE CITY AFTER PIPING IN VAULT HAS PASSED ALL TESTS.
2. ALL VAULT WALL OPENINGS SHALL BE SEALED WITH NON–SHRINK GROUT.
3. TOP OF VAULT SHALL BE 1" ABOVE PROPOSED GRADE WITH 2% SLOPE AWAY FROM VAULT.
4. INSTALL 4" DRAIN FROM VAULT TO DAYLIGHT OR APPROVED DRYWELL OR STORM DRAIN WITH A BACKWATER CHECK VALVE ACCESSIBLE FROM VAULT. COORDINATE DRAINAGE SYSTEM WITH BACKFLOW DEVICE VAULT INSTALLATION.
5. VAULT SHALL BE CLEAN AND FREE OF DEBRIS PRIOR TO METER INSTALLATION.
6. ALL MECHANICAL JOINTS SHALL MEGALUG RESTRAINER GLANDS AS SHOWN.
7. SERVICE LINE INTO VAULT SHALL HAVE A MINIMUM OF 40 FEET OF RESTRAINED JOINT PIPE BETWEEN DISTRIBUTION WATERLINE AND VAULT.
8. SERVICE LINE INTO VAULT SHALL BE COMPLETELY BACKFILLED WITH SELECT BACKFILL BETWEEN DISTRIBUTION LINE AND VAULT.
9. INSTALL A MINIMUM OF 3 PIPE SUPPORTS IN VAULT, GRINNELL NO. 264 OR ELCEN NO. 50.
10. PIPE TO BE A MINIMUM OF 12" AND A MAXIMUM OF 48" ABOVE THE FLOOR OF THE VAULT.
11. ONLY APPROVED RESILIENT SEAT GATE VALVES ARE ALLOWED.
12. ALL VAULT DOORS TO BE UTILITY VAULT NO. 3–332P WITH 2 METER LID OPENINGS.
13. VAULT SHALL BE EQUIPPED WITH AN APPROVED LADDER. IF VAULT DEPTH IS GREATER THAN 6 FT., AN APPROVED EXTENSION LADDER SHALL BE INSTALLED.
14. PIPE BETWEEN THE TWO TEES SHALL BE ON CONTINUOUS PIECE – NO JOINTS.
15. ALL SERVICE PIPING WILL BE CHLORINATED AND TESTED TO CITY SPECIFICATIONS.
16. REMOTE METERS MUST BE VISIBLE FROM LID HATCH.
17. ALL VALVES INSIDE VAULTS MUST HAVE HAND WHEELS.

MILWAUKIE, OREGON FOUNDED 1847	CITY OF MILWAUKIE, OREGON – PUBLIC WORKS DEPT.					
	Standard Hersey MFM–MCT Compound Meter Notes					DRAWING NO. 410B
	APPROVED Gary Parkson 12/12	NO.	REVISIONS	DATE	BY	
	CITY ENGINEER DATE					DEC 2012

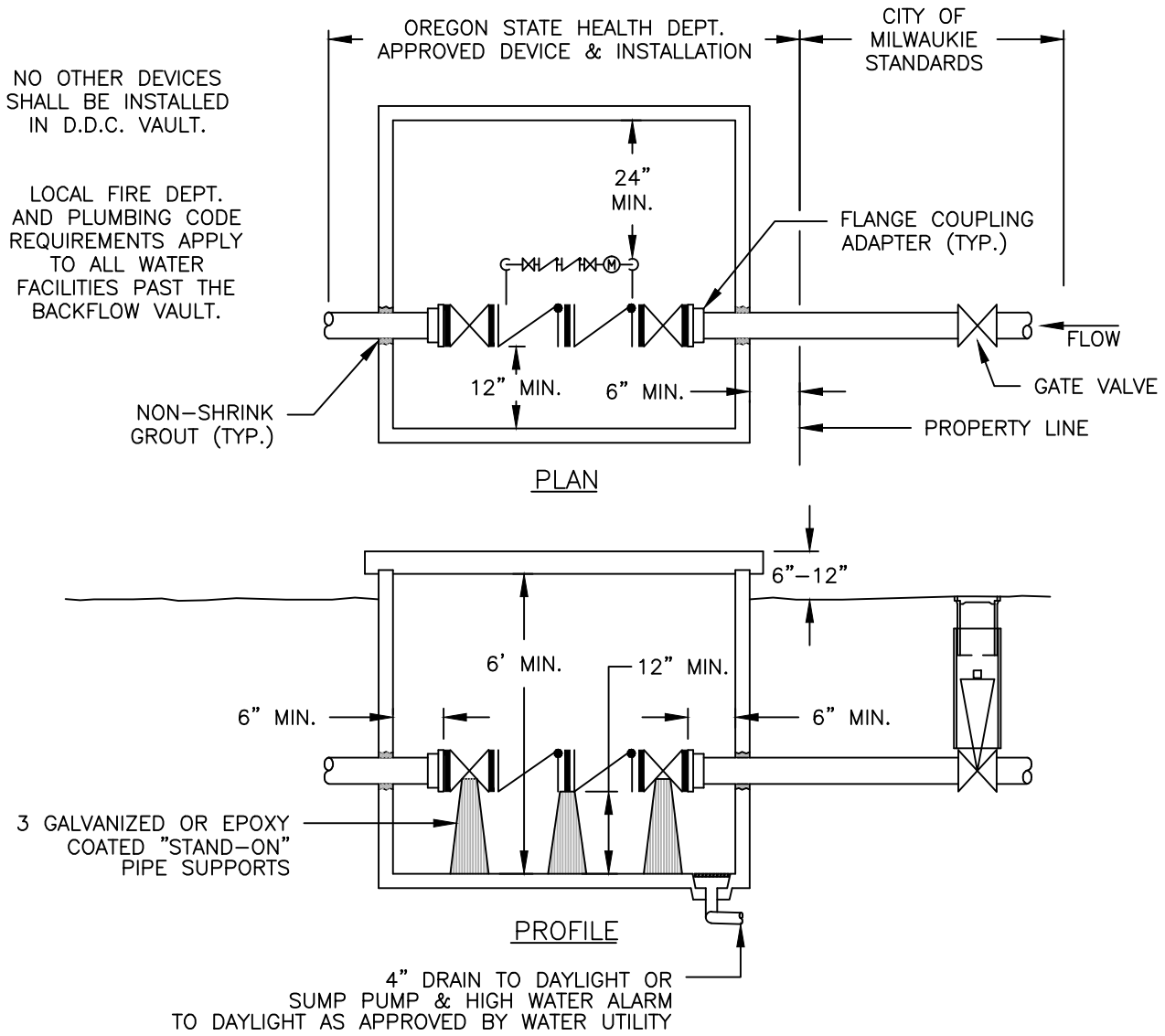

D.D.C. SIZE	UTILITY VAULT for DOUBLE DETECTOR CHECK DEVICE	
	VAULT	LID
3"	577-LA	LID 57-T-2-332P
4"	577-LA	LID 57-T-2-332P
6"	676-LA	LID 676-T-2-332P
8"	687-2-LA	LID 687-T-2-332P
10"	5106-1-LA	LID 5106-3-T-3-332P

CITY OF MILWAUKIE, OREGON - PUBLIC WORKS DEPT.

Double Detector Check Vault

DRAWING NO. **411A**

APPROVED Gary Parkin 12/12
CITY ENGINEER DATE

NO.	REVISIONS	DATE	BY

DEC 2012

CITY OF MILWAUKIE
REQUIREMENTS FOR BACKFLOW PREVENTION ASSEMBLY
INSTALLATIONS ON 1 1/2" AND LARGER DOMESTIC SERVICES

AN APPROVED BACKFLOW PREVENTION ASSEMBLY IS REQUIRED ON ALL 1 1/2" AND LARGER DOMESTIC METER SIZE SERVICES, ALL IRRIGATION AND MOST FIRELINE SYSTEMS. AN ASSEMBLY WILL BE APPROVED BY THE CITY OF MILWAUKIE ONLY IF THE STATE OF OREGON HEALTH DIVISION HAS APPROVED ITS USE AS A BACKFLOW ASSEMBLY. THE ASSEMBLY SHALL BE INSTALLED AT THE PROPERTY LINE, THE PROPOSED LOCATION MUST BE APPROVED BY THE WATER DIVISON CROSS-CONNECTION SPECIALIST OR CITY ENGINEER. A WATER SERVICE SHALL NOT BE TURNED ON UNTIL ALL REQUIRED BACKFLOW PREVENTION ASSEMBLIES ARE INSTALLED, INSPECTED, TESTED AND REGISTERED WITH THE CITY OF MILWAUKIE CROSS CONNECTION SPECIALIST. COSTS OF ALL INSTALLATIONS, INCLUDING ALL COSTS OF INITIAL INSPECTION AND TESTING FEES, SHALL BE THE RESPONSIBILITY OF THE CUSTOMER. THE COSTOMER WILL BE RESPONSIBLE FOR ALL MAINTENANCE AND TESTING OF THE ASSEMBLY AND VAULT WHEN USED.

TO ENSURE PROPER OPERATION AND ACCESSIBILITY OF ALL BACKFLOW PREVENTION ASSEMBLIES, THE FOLLOWING REQUIREMENTS SHALL APPLY TO INSTALLATION OF THESE ASSEMBLIES UNLESS SPECIFICALLY APPROVED BY THE WATER DIVISION CROSS CONNECTION SPECIALIST OR CITY ENGINEER.

1. NO PART OF THE BACKFLOW PREVENTION ASSEMBLY SHALL BE SUBMERGED IN WATER OR INSTALLED IN A LOCATION SUBJECT TO FLOODING. IF INSTALLED IN A VAULT OR CHAMBER, ADEQUATE DRAINAGE SHALL BE PROVIDED BY EITHER DRAINAGE TO DAYLIGHT OR BY SUMP PUMP WITH HIGH WATER ALARM SYSTEM. TEST COCKS SHALL BE PLUGGED. THE PLUGS SHALL NOT BE OF DISSIMILAR METALS.

2. THE ASSEMBLY MUST BE PROTECTED FROM FREEZING AND OTHER SEVERE WEATHER CONDITIONS.

3. ONLY ASSEMBLIES APPROVED FOR VERTICAL INSTALLATION MAY BE INSTALLED VERTICALLY.

4. THE ASSEMBLY SHALL BE READILY ACCESSIBLE WITH ADEQUATE ROOM FOR MAINTENANCE AND TESTING. DEVICES 2 INCHES AND SMALLER SHALL HAVE AT LEAST A 12-INCH CLEARANCE BELOW AND ON BOTH SIDES OF THE ASSEMBLY; AND IF LOCATED IN A VAULT, THE TOP OF THE ASSEMBLY SHALL BE BETWEEN 12 AND 24 INCHES BELOW GRADE.

5. ALL ASSEMBLIES LARGER THAN 2 INCHES SHALL HAVE A 12-INCH CLEARANCE ON THE BACKSIDE, A 24-INCH CLEARANCE ON THE TEST-COCK SIDE, AND 12 INCHES BELOW THE DEVICE ASSEMBLIES. ADEQUATE CLEARANCE (3 INCHES MINIMUM) MUST BE MAINTAINED ABOVE O.S.&Y. GATE VALVE STEM. HEADROOM OF 6'0" IS REQUIRED IN VAULTS. ACCESS TO THE ASSEMBLY AND TO ANY VAULT OF CHAMBER SHALL REMAIN CLEAR AT ALL TIMES. AN OR/OSHA APPROVED CHAMBER LADDER THAT ENTENDS 3 FT. ABOVE SURFACE OF VAULT SHALL BE INSTALLED.

6. NO INDICATING VALVES ARE ALLOWED ON DOUBLE CHECK ASSEMBLIES.

7. ONLY APPROVED DOUBLE CHECK DETECTOR CHECK VALVE ASSEMBLIES ARE TO BE USED FOR SYSTEM CONTAINMENT ON FIRE LINE SERVICES IN THE CITY OF MILWAUKIE. THE METER ON BYPASS ASSEMBLIES SHALL READ IN CUBIC FEET.

8. IF A FIRE LINE FLOW, OR TAMPER SWITCH IS INSTALLED, IT MUST BE CONNECTED TO A MONITORED FIRE DETECTION SYSTEM APPROVED BY THE FIRE MARSHAL. NO INSTALLATION WILL MODIFY THE BACKFLOW ASSEMBLY OR INTERFERE WITH ITS OPERATION OR MAINTENANCE.

9. ALL BACKFLOW ASSEMBLY SHALL BE INSTALLED AT THE SERVICE CONNECTION TO THE PREMISES PER OREGON, ADMINISTRATIVE RULES 333-61-070, CROSS CONNECTION CONTROL REQUIREMENTS, UNLESS SPECIFICALLY APPROVED BY THE WATER DIVISION CROSS CONNECTION SPECIALIST OR CITY ENGINEER.

10. ALL PIPE BETWEEN MAIN AND DEVICE SHALL BE RESTRAINED. USE MEGA-LUG RETAINER GLANDS ON MJ FITTINGS AND FIELD-LOK GASKETS ON BELL JOINTS. UNI-FLANGE ADAPTERS MAY BE USED IN VAULTS.

MILWAUKIE, OREGON FOUNDED 1847

CITY OF MILWAUKIE, OREGON – PUBLIC WORKS DEPT.

Double Detector Check Vault Notes

DRAWING NO. 411B

APPROVED Gary Parkin 12/12
CITY ENGINEER DATE

NO.	REVISIONS	DATE	BY
1	COMBINED DRAWINGS 411B AND 411C	12/11	MCP

DEC 2012

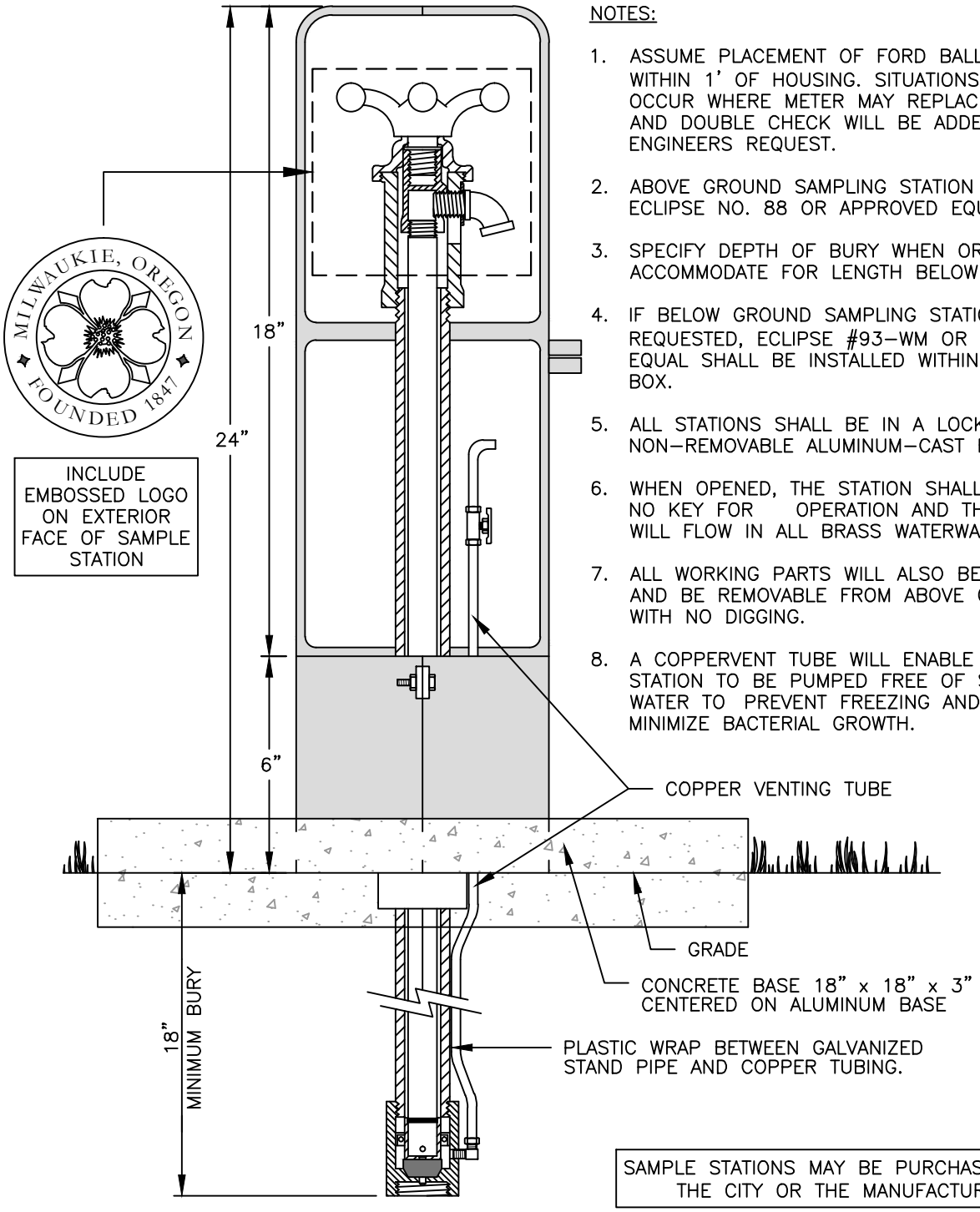

NOTES:

1. ASSUME PLACEMENT OF FORD BALL VALVE WITHIN 1' OF HOUSING. SITUATIONS MAY OCCUR WHERE METER MAY REPLACE VALVE AND DOUBLE CHECK WILL BE ADDED AT ENGINEERS REQUEST.
2. ABOVE GROUND SAMPLING STATION SHALL BE ECLIPSE NO. 88 OR APPROVED EQUAL.
3. SPECIFY DEPTH OF BURY WHEN ORDERING TO ACCOMMODATE FOR LENGTH BELOW GROUND.
4. IF BELOW GROUND SAMPLING STATION IS REQUESTED, ECLIPSE #93–WM OR APPROVED EQUAL SHALL BE INSTALLED WITHIN METER BOX.
5. ALL STATIONS SHALL BE IN A LOCKABLE, NON–REMOVABLE ALUMINUM–CAST HOUSING.
6. WHEN OPENED, THE STATION SHALL REQUIRE NO KEY FOR OPERATION AND THE WATER WILL FLOW IN ALL BRASS WATERWAY.
7. ALL WORKING PARTS WILL ALSO BE BRASS AND BE REMOVABLE FROM ABOVE GROUND WITH NO DIGGING.
8. A COPPERVENT TUBE WILL ENABLE EACH STATION TO BE PUMPED FREE OF STANDING WATER TO PREVENT FREEZING AND TO MINIMIZE BACTERIAL GROWTH.

SAMPLE STATIONS MAY BE PURCHASED FROM THE CITY OR THE MANUFACTURER

CITY OF MILWAUKIE, OREGON – PUBLIC WORKS DEPT.

Above Ground Sampling Stations

DRAWING NO. 412

APPROVED Gary Parkin 12/12

CITY ENGINEER DATE

NO.	REVISIONS	DATE	BY
1	GENERAL FORMATTING	12/10	MCP

DEC 2012

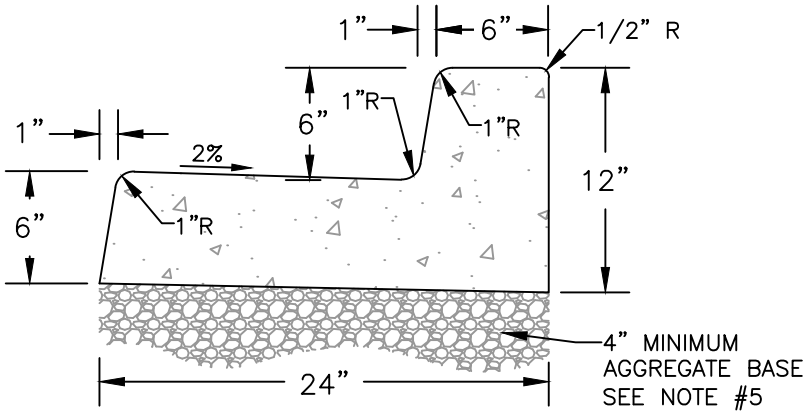

CURB AND GUTTER

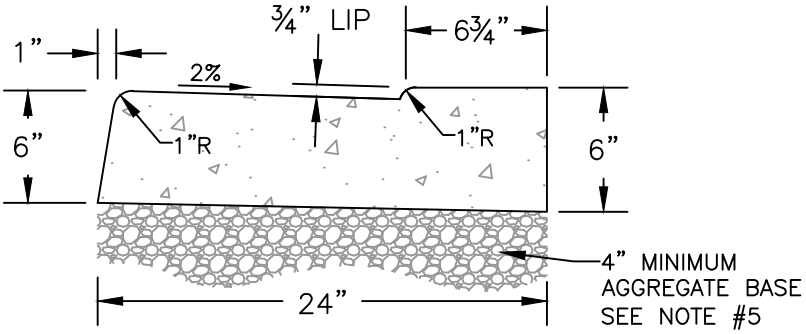

CURB AND GUTTER
AT DRIVEWAY

NOTES:

1. CONCRETE SHALL HAVE BREAKING STRENGTH OF 3300 PSI AFTER 28 DAYS.
2. NO EXPANSION MATERIAL SHALL BE USED.
3. TRANSVERSE CONTRACTION JOINTS REQUIRED AT EACH POINT OF TANGENCY AND EVERY 15 FEET. THE DEPTH OF JOINT SHALL BE MIN. OF 1/3 CONCRETE THICKNESS.
4. DRAINAGE BLOCK – 3" DIA. ABS PIPE. TROWEL JOINT OVER PIPE AREA IN DIRECTION OF PIPE.
5. BASE ROCK – 3/4" MINUS OR 1" MINUS COMPACTED TO 95%. MIN. DEPTH OF 4" OR TO STREET SUBGRADE, WHICHEVER IS GREATER.

ATTENTION: ALL CONCRETE WORK WITHIN THE PUBLIC RIGHT–OF–WAY REQUIRES A RIGHT–OF–WAY PERMIT IN ADDITION TO SUB–GRADE, BASE ROCK, AND CONCRETE FORM INSPECTION AND APPROVAL BY THE CITY INSPECTOR PRIOR TO POURING CONCRETE. CALL 503–786–7575, 24 HOURS IN ADVANCE OF WORK TO SCHEDULE AN INSPECTION.

MILWAUKIE, OREGON · FOUNDED 1847

CITY OF MILWAUKIE, OREGON – PUBLIC WORKS DEPT.

Standard Curb and Gutter

DRAWING NO. **500**

APPROVED Gary Parkin 12/12
CITY ENGINEER DATE

NO.	REVISIONS	DATE	BY
1	SCALED DRAWING AND TEXT	12/10	MCP
2	ADDED CURB AND GUTTER AT DRIVEWAY	12/11	MCP
3	REVISED DIMENSIONS	12/12	MTC

DEC 2012

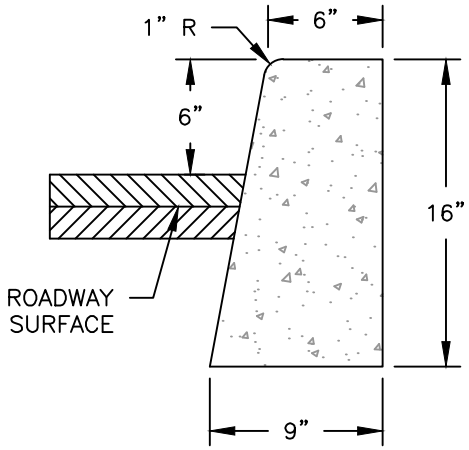

TYPE C CURB

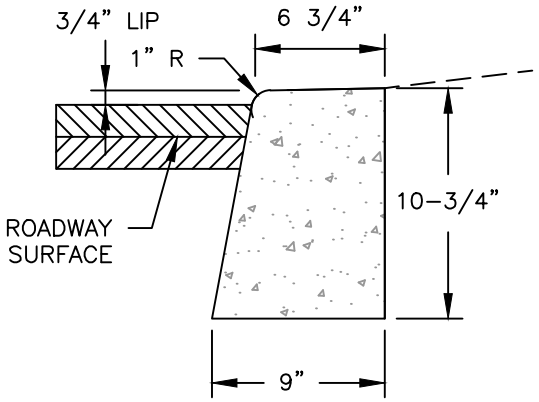

CURB AT DRIVEWAY

NOTES:

1. CONCRETE SHALL HAVE BREAKING STRENGTH OF 3300 PSI AFTER 28 DAYS.
2. NO EXPANSION MATERIAL SHALL BE USED.
3. TRANSVERSE CONTRACTION JOINTS REQUIRED AT EACH POINT OF TANGENCY AND EVERY 15 FEET. THE DEPTH OF JOINT SHALL BE MIN. OF 1/3 CONCRETE THICKNESS.
4. DRAINAGE BLOCK – 3" DIA. ABS PIPE. TROWEL JOINT OVER PIPE AREA IN DIRECTION OF PIPE.
5. BASE ROCK – 3/4" MINUS OR 1" MINUS COMPACTED TO 95%. MIN. DEPTH OF 4" OR TO STREET SUBGRADE, WHICHEVER IS GREATER.
6. COMMERCIAL AND HEAVY RESIDENTIAL DRIVEWAY CURB MAY REQUIRE 2–#4 REBARS.

ATTENTION: ALL CONCRETE WORK WITHIN THE PUBLIC RIGHT–OF–WAY REQUIRES A RIGHT–OF–WAY PERMIT IN ADDITION TO SUB–GRADE, BASE ROCK, AND CONCRETE FORM INSPECTION AND APPROVAL BY THE CITY INSPECTOR PRIOR TO POURING CONCRETE. CALL 503–786–7575, 24 HOURS IN ADVANCE OF WORK TO SCHEDULE AN INSPECTION.

CITY OF MILWAUKIE, OREGON – PUBLIC WORKS DEPT.

Standard Type C Curb

DRAWING NO. 501

APPROVED Gary Parkin 12/12

CITY ENGINEER DATE

NO.	REVISIONS	DATE	BY
1	CLARIFICATION OF DIMENSIONS & FONT	10/09	BR
2	SCALED DRAWING AND TEXT	12/10	MCP
3	CHANGED CURB HEIGHT AT DRIVEWAY	12/12	MTC

DEC 2012

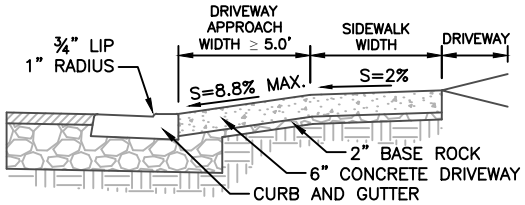

CROSS SECTION A–A

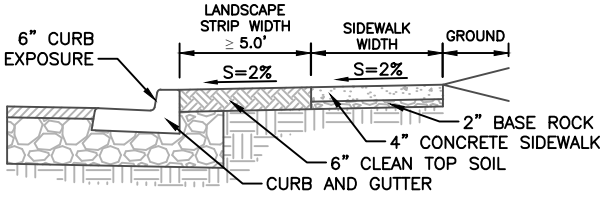

CROSS SECTION B–B

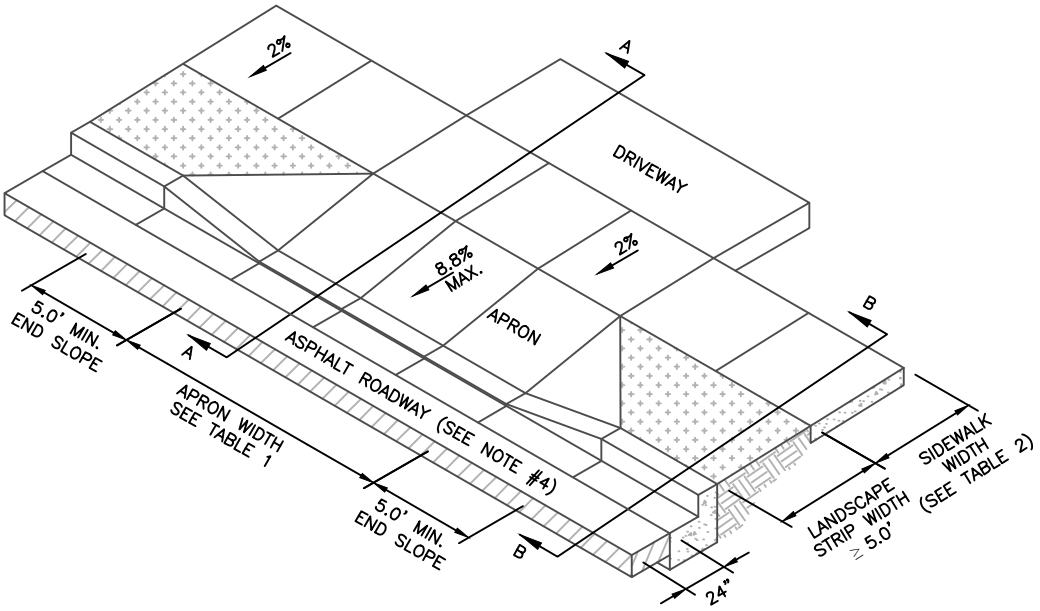

TABLE 1 – DRIVEWAY APPROACH WIDTH		
CLASSIFICATION	MIN. WIDTH	MAX. WIDTH
1–2 RESIDENTIAL DWELLING UNITS	9.0'	20.0'
3 RESIDENTIAL DWELLING UNITS	16.0'	20.0'
4–7 RESIDENTIAL DWELLING UNITS	20.0'	24.0'
8 OR MORE RESIDENTIAL DWELLING UNITS	24.0'	36.0'

TABLE 2 – SIDEWALK WIDTH		
CLASSIFICATION	SETBACK	CURB TIGHT
LOCAL STREET	5.0'	6.0'
NEIGHBORHOOD ROUTE	5.0'	6.0'
COLLECTOR ROAD	6.0'	8.0'
ARTERIAL ROUTE	6.0'	10.0'

1. CONTRACTION JOINTS SHALL BE 1/8" TO 1/4" WIDE. DEPTH OF THE JOINT SHALL BE A MINIMUM OF 1/3 THE THICKNESS OF THE CONCRETE.
2. ALL SURFACES SHALL BE LIGHTLY BROOMED. ALL EDGES SHALL BE TOOL ROUNDED AND SHINED 3" AFTER BROOMING.
3. SAW CUT EXISTING CURBS THAT ARE TO BE REMOVED TO THE NEAREST JOINT.
4. EXISTING ASPHALT CONCRETE IN FRONT OF THE APPROACH SHALL BE SAW CUT ALONG A LINE PARALLEL TO THE CURB AT A MINIMUM DISTANCE OF 24" AWAY FROM THE FACE OF THE CURB AND REPLACED WITH HOT MIX ASPHALT CONCRETE WITH MINIMUM THICKNESS OF 4" OR MATCH EXISTING, WHICHEVER IS GREATER.
5. CONCRETE SHALL BE 3300 PSI AT 28 DAYS WITH A SLUMP RANGE OF 2" TO 4".
6. CURB JOINT SHALL BE A TROWLED JOINT WITH A MINIMUM 1/2" RADIUS ALONG THE BACK OF CURB.
7. CONCRETE PANELS SHOULD BE SQUARE (4'X4', 5'X5', ETC.). IN NO CASE SHALL THE LENGTH OF A CONCRETE PANEL BE GREATER THAN 1.5 TIMES THE WIDTH AND VICE VERSA.
8. COMMERCIAL DRIVEWAY APRONS AND ADJACENT SIDEWALK REQUIRE #4 REBAR, 12" ON–CENTER IN EACH DIRECTION. THE APRON REBAR SHALL BE ADEQUATELY TIED TO THE CURB REBAR.

MILWAUKIE, OREGON · FOUNDED 1847

CITY OF MILWAUKIE, OREGON – PUBLIC WORKS DEPT.

Set Back Driveway Approach
Landscape Strip ≥ 5.0'

DRAWING NO. 502A

APPROVED Gary Parkin 12/12
CITY ENGINEER DATE

NO.	REVISIONS	DATE	BY
1	UPDATED FOR CODE CHANGES	10/09	ZJW
2	ADJUSTED DIMENSIONS FOR READABILITY	12/10	MCP
3	REVISED NOTE #4	12/12	MTC

DEC 2012

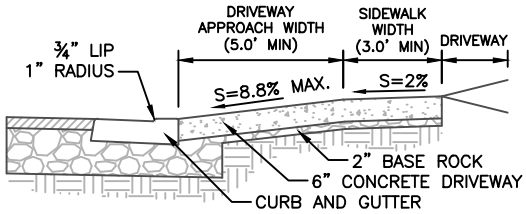

CROSS SECTION A–A

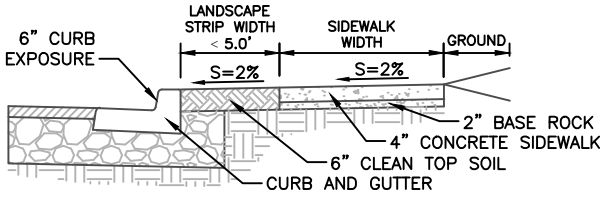

CROSS SECTION B–B

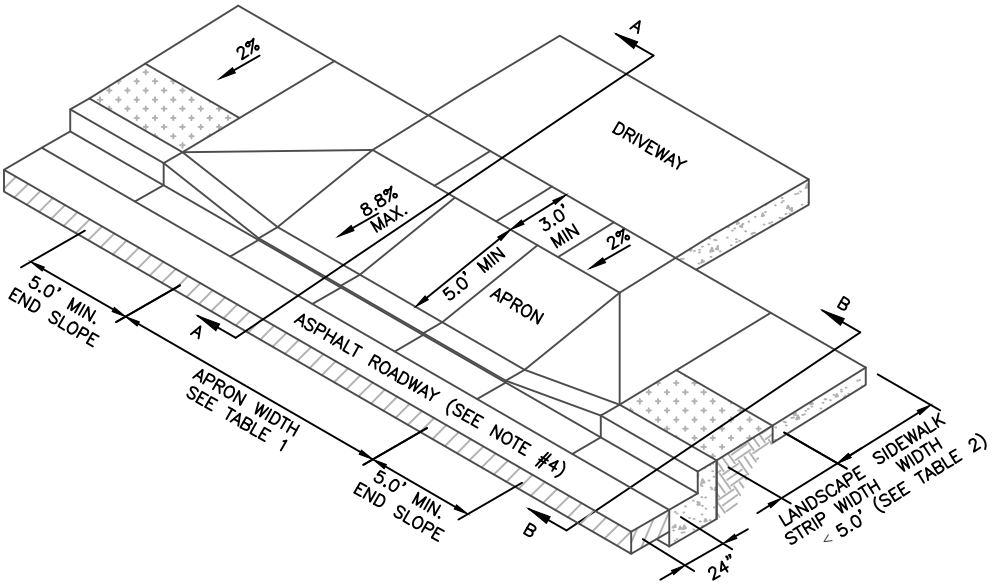

TABLE 1 – DRIVEWAY APPROACH WIDTH		
CLASSIFICATION	MIN. WIDTH	MAX. WIDTH
1–2 RESIDENTIAL DWELLING UNITS	9.0'	20.0'
3 RESIDENTIAL DWELLING UNITS	16.0'	20.0'
4–7 RESIDENTIAL DWELLING UNITS	20.0'	24.0'
8 OR MORE RESIDENTIAL DWELLING UNITS	24.0'	36.0'

TABLE 2 – SIDEWALK WIDTH		
CLASSIFICATION	SETBACK	CURB TIGHT
LOCAL STREET	5.0'	6.0'
NEIGHBORHOOD ROUTE	5.0'	6.0'
COLLECTOR ROAD	6.0'	8.0'
ARTERIAL ROUTE	6.0'	10.0'

1. CONTRACTION JOINTS SHALL BE 1/8" TO 1/4" WIDE. DEPTH OF THE JOINT SHALL BE A MINIMUM OF 1/3 THE THICKNESS OF THE CONCRETE.
2. ALL SURFACES SHALL BE LIGHTLY BROOMED. ALL EDGES SHALL BE TOOL ROUNDED AND SHINED 3" AFTER BROOMING.
3. SAW CUT EXISTING CURBS THAT ARE TO BE REMOVED TO THE NEAREST JOINT.
4. EXISTING ASPHALT CONCRETE IN FRONT OF THE APPROACH SHALL BE SAW CUT ALONG A LINE PARALLEL TO THE CURB AT A MINIMUM DISTANCE OF 24" AWAY FROM THE FACE OF THE CURB AND REPLACED WITH HOT MIX ASPHALT CONCRETE WITH MINIMUM THICKNESS OF 4" OR MATCH EXISTING, WHICHEVER IS GREATER.
5. CONCRETE SHALL BE 3300 PSI AT 28 DAYS WITH A SLUMP RANGE OF 2" TO 4".
6. CURB JOINT SHALL BE A TROWLED JOINT WITH A MINIMUM 1/2" RADIUS ALONG THE BACK OF CURB.
7. CONCRETE PANELS SHOULD BE SQUARE (4'X4', 5'X5', ETC.). IN NO CASE SHALL THE LENGTH OF A CONCRETE PANEL BE GREATER THAN 1.5 TIMES THE WIDTH AND VICE VERSA.
8. COMMERCIAL DRIVEWAY APRONS AND ADJACENT SIDEWALK REQUIRE #4 REBAR, 12" ON–CENTER IN EACH DIRECTION. THE APRON REBAR SHALL BE ADEQUATELY TIED TO THE CURB REBAR.

MILWAUKIE, OREGON · FOUNDED 1847

CITY OF MILWAUKIE, OREGON – PUBLIC WORKS DEPT.

Set Back Driveway Approach
Landscape Strip < 5.0'

DRAWING NO. 502B

APPROVED Gary Parkin 12/12
CITY ENGINEER DATE

NO.	REVISIONS	DATE	BY
1	UPDATED FOR CODE CHANGES	10/09	ZJW
2	REVISED NOTE #4	12/12	MTC

DEC 2012

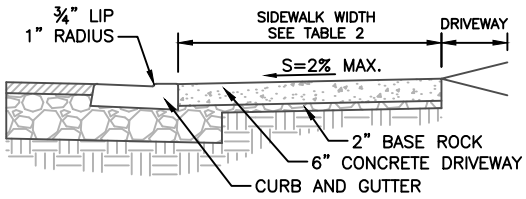

CROSS SECTION A–A

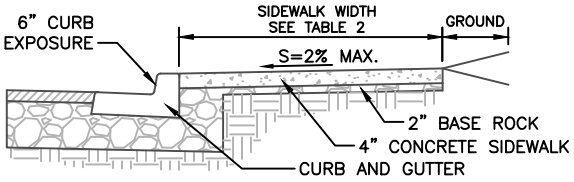

CROSS SECTION B–B

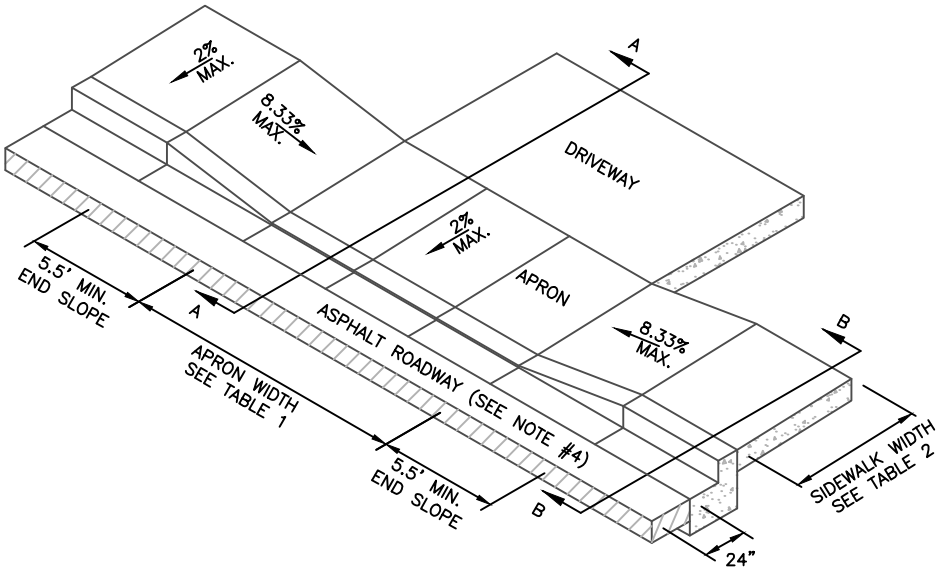

TABLE 1 – DRIVEWAY APPROACH WIDTH		
CLASSIFICATION	MIN. WIDTH	MAX. WIDTH
1–2 RESIDENTIAL DWELLING UNITS	9.0'	20.0'
3 RESIDENTIAL DWELLING UNITS	16.0'	20.0'
4–7 RESIDENTIAL DWELLING UNITS	20.0'	24.0'
8 OR MORE RESIDENTIAL DWELLING UNITS	24.0'	36.0'

TABLE 2 – SIDEWALK WIDTH		
CLASSIFICATION	SETBACK	CURB TIGHT
LOCAL STREET	5.0'	6.0'
NEIGHBORHOOD ROUTE	5.0'	6.0'
COLLECTOR ROAD	6.0'	8.0'
ARTERIAL ROUTE	6.0'	10.0'

1. CONTRACTION JOINTS SHALL BE 1/8" TO 1/4" WIDE. DEPTH OF THE JOINT SHALL BE A MINIMUM OF 1/3 THE THICKNESS OF THE CONCRETE.
2. ALL SURFACES SHALL BE LIGHTLY BROOMED. ALL EDGES SHALL BE TOOL ROUNDED AND SHINED 3" AFTER BROOMING.
3. SAW CUT EXISTING CURBS THAT ARE TO BE REMOVED TO THE NEAREST JOINT.
4. EXISTING ASPHALT CONCRETE IN FRONT OF THE APPROACH SHALL BE SAW CUT ALONG A LINE PARALLEL TO THE CURB AT A MINIMUM DISTANCE OF 24" AWAY FROM THE FACE OF THE CURB AND REPLACED WITH HOT MIX ASPHALT CONCRETE WITH MINIMUM THICKNESS OF 4" OR MATCH EXISTING, WHICHEVER IS GREATER.
5. CONCRETE SHALL BE 3300 PSI AT 28 DAYS WITH A SLUMP RANGE OF 2" TO 4".
6. CURB JOINT SHALL BE A TROWLED JOINT WITH A MINIMUM 1/2" RADIUS ALONG THE BACK OF CURB.
7. CONCRETE PANELS SHOULD BE SQUARE (4'X4', 5'X5', ETC.). IN NO CASE SHALL THE LENGTH OF A CONCRETE PANEL BE GREATER THAN 1.5 TIMES THE WIDTH AND VICE VERSA.
8. COMMERCIAL DRIVEWAY APRONS AND ADJACENT SIDEWALK REQUIRE #4 REBAR, 12" ON–CENTER IN EACH DIRECTION. THE APRON REBAR SHALL BE ADEQUATELY TIED TO THE CURB REBAR.

MILWAUKIE, OREGON – FOUNDED 1847

CITY OF MILWAUKIE, OREGON – PUBLIC WORKS DEPT.

Curb Tight Driveway Approach
Driveway Width ≤ Apron Width

DRAWING NO. 502C

APPROVED Gary Parkson 12/12
CITY ENGINEER DATE

NO.	REVISIONS	DATE	BY
1	UPDATED FOR CODE CHANGES	10/09	ZJW
2	ADJUSTED DIMENSIONS FOR READABILITY	12/10	MCP
3	REVISED NOTE #4	12/12	MTC

DEC 2012

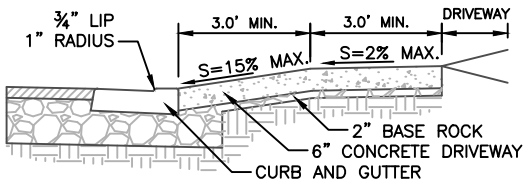

CROSS SECTION A–A

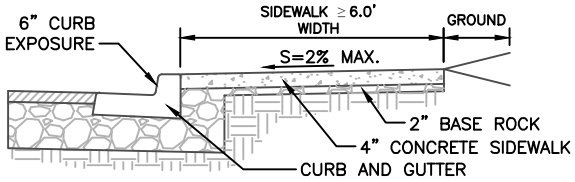

CROSS SECTION B–B

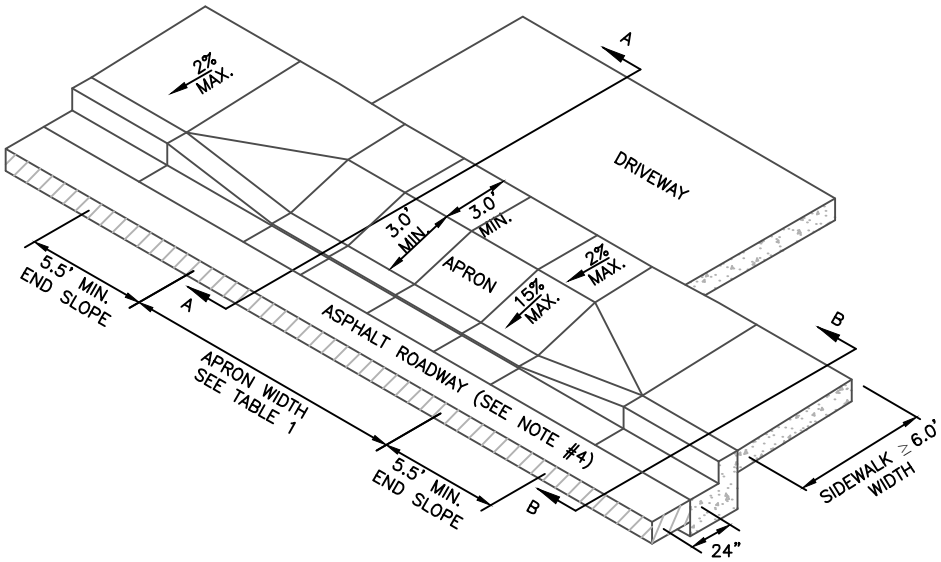

TABLE 1 – DRIVEWAY APPROACH WIDTH		
CLASSIFICATION	MIN. WIDTH	MAX. WIDTH
1–2 RESIDENTIAL DWELLING UNITS	9.0'	20.0'
3 RESIDENTIAL DWELLING UNITS	16.0'	20.0'
4–7 RESIDENTIAL DWELLING UNITS	20.0'	24.0'
8 OR MORE RESIDENTIAL DWELLING UNITS	24.0'	36.0'

TABLE 2 – SIDEWALK WIDTH		
CLASSIFICATION	SETBACK	CURB TIGHT
LOCAL STREET	5.0'	6.0'
NEIGHBORHOOD ROUTE	5.0'	6.0'
COLLECTOR ROAD	6.0'	8.0'
ARTERIAL ROUTE	6.0'	10.0'

1. CONTRACTION JOINTS SHALL BE 1/8" TO 1/4" WIDE. DEPTH OF THE JOINT SHALL BE A MINIMUM OF 1/3 THE THICKNESS OF THE CONCRETE.
2. ALL SURFACES SHALL BE LIGHTLY BROOMED. ALL EDGES SHALL BE TOOL ROUNDED AND SHINED 3" AFTER BROOMING.
3. SAW CUT EXISTING CURBS THAT ARE TO BE REMOVED TO THE NEAREST JOINT.
4. EXISTING ASPHALT CONCRETE IN FRONT OF THE APPROACH SHALL BE SAW CUT ALONG A LINE PARALLEL TO THE CURB AT A MINIMUM DISTANCE OF 24" AWAY FROM THE FACE OF THE CURB AND REPLACED WITH HOT MIX ASPHALT CONCRETE WITH MINIMUM THICKNESS OF 4" OR MATCH EXISTING, WHICHEVER IS GREATER.
5. CONCRETE SHALL BE 3300 PSI AT 28 DAYS WITH A SLUMP RANGE OF 2" TO 4".
6. CURB JOINT SHALL BE A TROWLED JOINT WITH A MINIMUM 1/2" RADIUS ALONG THE BACK OF CURB.
7. CONCRETE PANELS SHOULD BE SQUARE (4'X4', 5'X5', ETC.). IN NO CASE SHALL THE LENGTH OF A CONCRETE PANEL BE GREATER THAN 1.5 TIMES THE WIDTH AND VICE VERSA.
8. COMMERCIAL DRIVEWAY APRONS AND ADJACENT SIDEWALK REQUIRE #4 REBAR, 12" ON–CENTER IN EACH DIRECTION. THE APRON REBAR SHALL BE ADEQUATELY TIED TO THE CURB REBAR.

MILWAUKIE, OREGON · FOUNDED 1847

CITY OF MILWAUKIE, OREGON – PUBLIC WORKS DEPT.

Curb Tight Driveway Approach
Driveway Width > Apron Width & Sidewalk ≥ 6.0'

DRAWING NO. 502D

APPROVED Gary Parkin 12/12
CITY ENGINEER DATE

NO.	REVISIONS	DATE	BY
1	UPDATED FOR CODE CHANGES	10/09	ZJW
2	ADJUSTED DIMENSIONS FOR READABILITY	12/10	MCP
3	REVISED NOTE #4	12/12	MTC

DEC 2012

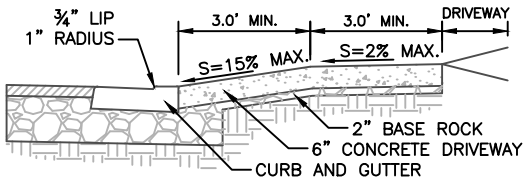

CROSS SECTION A–A

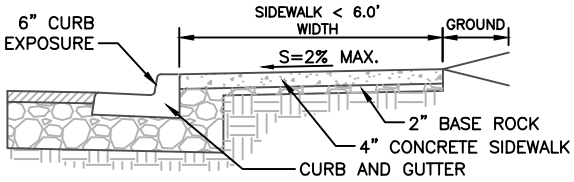

CROSS SECTION B–B

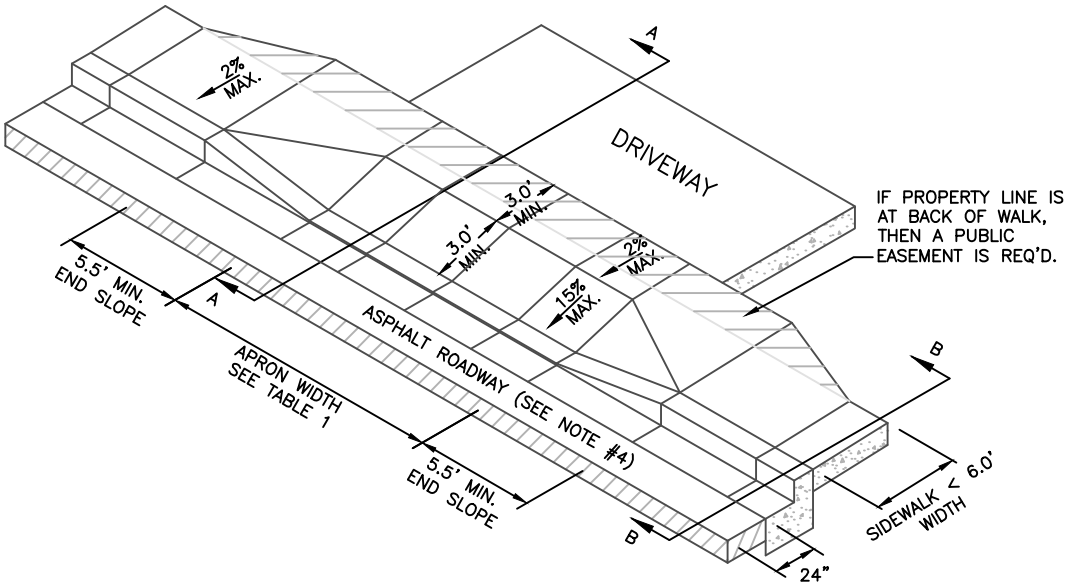

TABLE 1 – DRIVEWAY APPROACH WIDTH		
CLASSIFICATION	MIN. WIDTH	MAX. WIDTH
1–2 RESIDENTIAL DWELLING UNITS	9.0'	20.0'
3 RESIDENTIAL DWELLING UNITS	16.0'	20.0'
4–7 RESIDENTIAL DWELLING UNITS	20.0'	24.0'
8 OR MORE RESIDENTIAL DWELLING UNITS	24.0'	36.0'

TABLE 2 – SIDEWALK WIDTH		
CLASSIFICATION	SETBACK	CURB TIGHT
LOCAL STREET	5.0'	6.0'
NEIGHBORHOOD ROUTE	5.0'	6.0'
COLLECTOR ROAD	6.0'	8.0'
ARTERIAL ROUTE	6.0'	10.0'

1. CONTRACTION JOINTS SHALL BE 1/8" TO 1/4" WIDE. DEPTH OF THE JOINT SHALL BE A MINIMUM OF 1/3 THE THICKNESS OF THE CONCRETE.
2. ALL SURFACES SHALL BE LIGHTLY BROOMED. ALL EDGES SHALL BE TOOL ROUNDED AND SHINED 3" AFTER BROOMING.
3. SAW CUT EXISTING CURBS THAT ARE TO BE REMOVED TO THE NEAREST JOINT.
4. EXISTING ASPHALT CONCRETE IN FRONT OF THE APPROACH SHALL BE SAW CUT ALONG A LINE PARALLEL TO THE CURB AT A MINIMUM DISTANCE OF 24" AWAY FROM THE FACE OF THE CURB AND REPLACED WITH HOT MIX ASPHALT CONCRETE WITH MINIMUM THICKNESS OF 4" OR MATCH EXISTING, WHICHEVER IS GREATER.
5. CONCRETE SHALL BE 3300 PSI AT 28 DAYS WITH A SLUMP RANGE OF 2" TO 4".
6. CURB JOINT SHALL BE A TROWLED JOINT WITH A MINIMUM 1/2" RADIUS ALONG THE BACK OF CURB.
7. CONCRETE PANELS SHOULD BE SQUARE (4'X4', 5'X5', ETC.). IN NO CASE SHALL THE LENGTH OF A CONCRETE PANEL BE GREATER THAN 1.5 TIMES THE WIDTH AND VICE VERSA.
8. COMMERCIAL DRIVEWAY APRONS AND ADJACENT SIDEWALK REQUIRE #4 REBAR, 12" ON–CENTER IN EACH DIRECTION. THE APRON REBAR SHALL BE ADEQUATELY TIED TO THE CURB REBAR.

MILWAUKIE, OREGON – FOUNDED 1847

CITY OF MILWAUKIE, OREGON – PUBLIC WORKS DEPT.

Curb Tight Driveway Approach
Driveway Width > Apron Width & Sidewalk < 6.0'

DRAWING NO. 502E

APPROVED Gary Parkin 12/12
CITY ENGINEER DATE

NO.	REVISIONS	DATE	BY
1	UPDATED FOR CODE CHANGES	10/09	ZJW
2	ADJUSTED DIMENSIONS FOR READABILITY	12/10	MCP
3	REVISED NOTE #4	12/12	MTC

DEC 2012

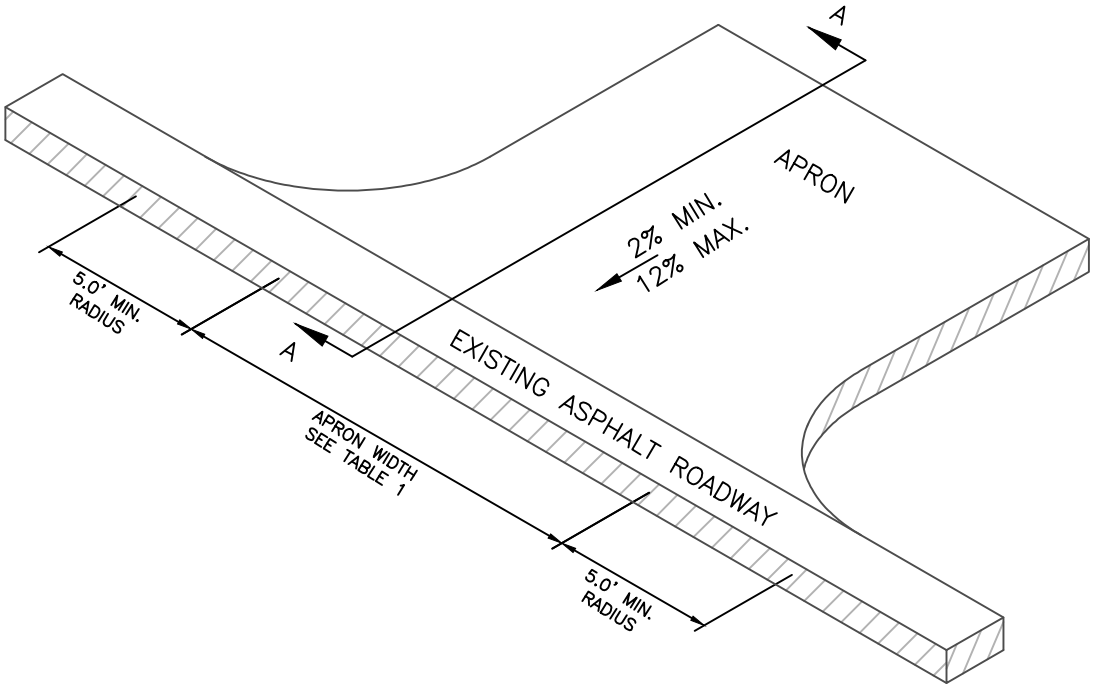

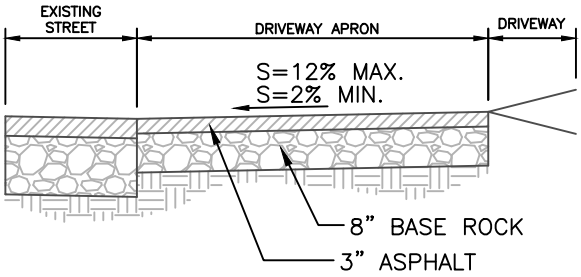

CROSS SECTION A–A

TABLE 1 – DRIVEWAY APPROACH WIDTH		
CLASSIFICATION	MIN. WIDTH	MAX. WIDTH
1–2 RESIDENTIAL DWELLING UNITS	9.0'	20.0'
3 RESIDENTIAL DWELLING UNITS	16.0'	20.0'
4–7 RESIDENTIAL DWELLING UNITS	20.0'	24.0'
8 OR MORE RESIDENTIAL DWELLING UNITS	24.0'	36.0'

1. ALL PAVEMENT INSTALLATION SHALL BE HOT CLASS "C" MIX ASPHALT CONCRETE.
2. EXISTING ASPHALT CONCRETE IN FRONT OF THE DRIVEWAY APRON SHALL BE SAW CUT ALONG A LINE PARALLEL TO THE FRONTING PROPERTY LINE TO PROVIDE A CLEAN SURFACE FOR THE DRIVEWAY APPROACH TO TIE INTO.
3. SAND SEAL ALL JOINTS BETWEEN THE NEW ASPHALT DRIVEWAY APPROACH AND THE EXISTING STREET.

CITY OF MILWAUKIE, OREGON – PUBLIC WORKS DEPT.

Asphalt Driveway Approach

DRAWING NO. 502F

APPROVED Gary Parkin 12/12
CITY ENGINEER DATE

NO.	REVISIONS	DATE	BY
1	UPDATED FOR CODE CHANGES	10/09	ZJW
2	GENERAL FORMATTING	12/10	MCP

DEC 2012

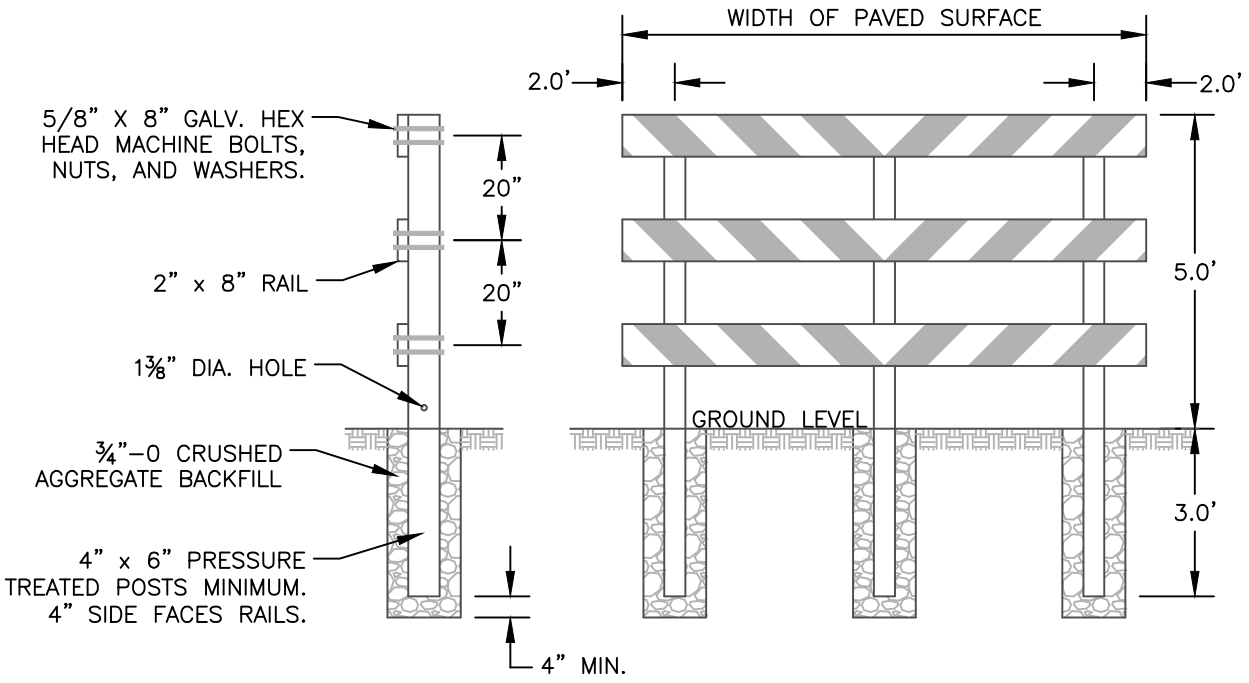

NOTES:

1. ALTERNATE 6" WIDE RED AND WHITE STRIPES (REFLECTORIZED SHEETING) AT 45 DEGREES.

CITY OF MILWAUKIE, OREGON – PUBLIC WORKS DEPT.

Barricade

DRAWING NO. **503**

APPROVED Gary Parkin 12/12

CITY ENGINEER DATE

NO.	REVISIONS	DATE	BY
1	GENERAL FORMATTING	12/10	MCP
2	REVISED DIMENSIONS	12/12	MTC

DEC 2012

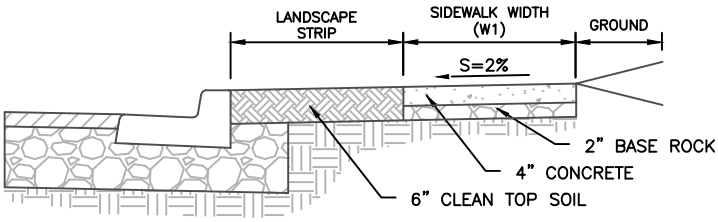

SECTION A–A

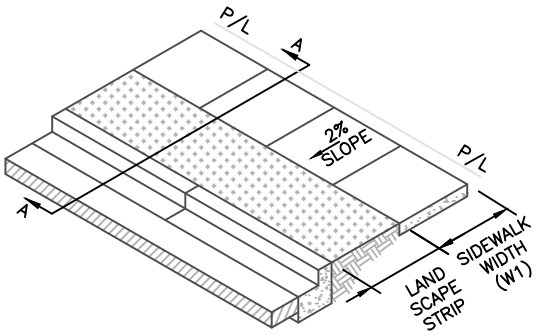

SET BACK SIDEWALK

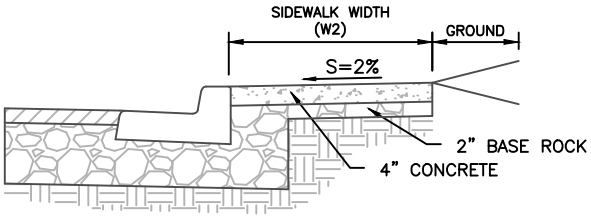

SECTION A–A

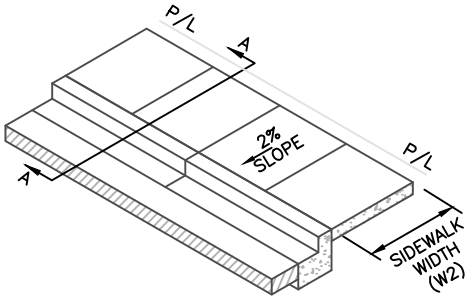

CURB TIGHT SIDEWALK

NOTES:

1. CONTRACTION JOINTS SHALL BE 1/8" TO 1/4" WIDE WITH A MAXIMUM SPACING OF EVERY 15 FEET. DEPTH OF THE JOINT SHALL BE A MINIMUM OF 1/3 THE THICKNESS OF THE CONCRETE.
2. ALL SURFACES SHALL BE LIGHTLY BROOMED. ALL EDGES SHALL BE TOOL ROUNDED AND SHINED 3" AFTER BROOMING.
3. SAW CUT EXISTING SIDEWALK THAT IS TO BE REMOVED TO THE NEAREST JOINT.
4. CONCRETE SHALL BE 3300 PSI AT 28 DAYS WITH A SLUMP RANGE OF 2" TO 4".
5. PERVIOUS CONCRETE SIDEWALK MAY BE USED AS SPECIFIED IN SPECIAL PROVISIONS OR AS APPROVED BY THE CITY ENGINEER.
6. SIDEWALK PANELS SHOULD BE SQUARE (4'X4', 5'X5', ETC.). IN NO CASE SHALL THE LENGTH OF A SIDEWALK PANEL BE GREATER THAN 1.5 TIMES THE WIDTH AND VICE VERSA.
7. BASE ROCK SHALL BE 3/4"–0 OR 1"–0 CRUSHED AGGREGATE ROCK COMPACTED TO 95% MAXIMUM DENSITY OF AASHTO T–180.
8. CURB JOINT FOR CURB TIGHT SIDEWALK SHALL BE A TROWLED JOINT WITH A 1/2" RADIUS ALONG THE BACK OF CURB.

TABLE 1 – SIDEWALK WIDTH

CLASSIFICATION	W1	W2
LOCAL STREET	5.0'	6.0'
NEIGHBORHOOD ROUTE	5.0'	6.0'
COLLECTOR ROAD	6.0'	8.0'
ARTERIAL ROUTE	6.0'	10.0'

CITY OF MILWAUKIE, OREGON – PUBLIC WORKS DEPT.

Sidewalk

DRAWING NO. 504

APPROVED Gary Parkin 12/12
CITY ENGINEER DATE

NO.	REVISIONS	DATE	BY
1	DRAWING REVISED	10/09	ZJW
2	DRAWING NUMBER CHANGED	12/10	MCP
3	ADDED PERVIOUS CONCRETE NOTE	12/11	MCP

DEC 2012

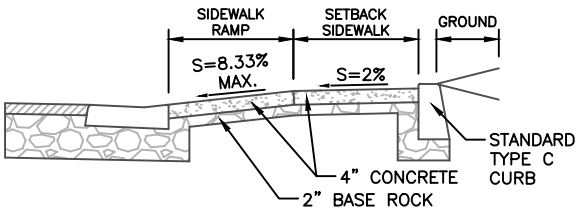

SECTION A–A

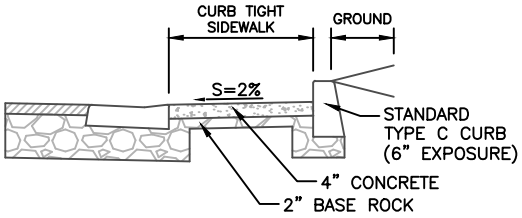

SECTION B–B

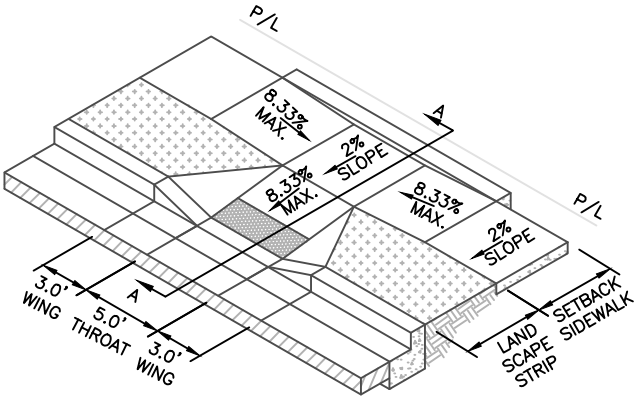

SETBACK SIDEWALK RAMP W/WINGS

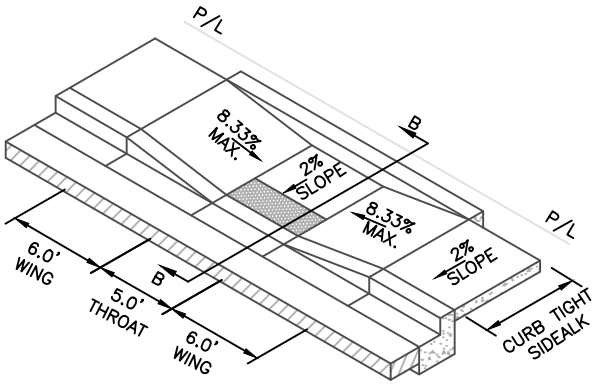

CURB TIGHT SIDEWALK RAMP

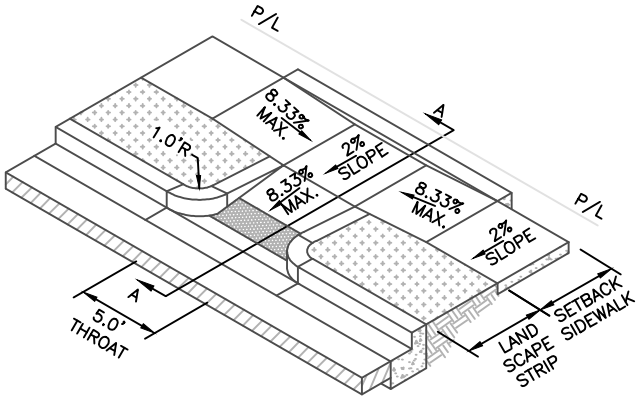

SETBACK SIDEWALK RAMP W/O WINGS

1. SIDEWALK RAMPS SHALL MEET ADA STANDARDS.
2. ALL SURFACES SHALL BE LIGHTLY BROOMED. ALL EDGES SHALL BE TOOL ROUNDED AND SHINED 3" AFTER BROOMING.
3. SAW CUT EXISTING RAMP, CURB, AND SIDEWALK THAT ARE TO BE REMOVED TO THE NEAREST JOINT.
4. CONCRETE SHALL BE 3300 PSI AT 28 DAYS WITH A SLUMP RANGE OF 2" TO 4".
5. SIDEWALK PANELS SHOULD BE SQUARE (4'X4', 5'X5', ETC.). IN NO CASE SHALL THE LENGTH OF A SIDEWALK PANEL BE GREATER THAN 1.5 TIMES THE WIDTH AND VICE VERSA.
6. BASE ROCK SHALL BE 3/4"–0 OR 1"–0 CRUSHED AGGREGATE ROCK COMPACTED TO 95% MAXIMUM DENSITY OF AASHTO T–180.
7. CURB JOINT FOR CURB TIGHT SIDEWALK SHALL BE A TROWLED JOINT WITH A 1/2" RADIUS ALONG THE BACK OF CURB.
8. LANDINGS SHALL BE PLACED AT THE TOP OF EACH RAMP. LANDING SLOPES SHALL NOT EXCEED 20:1 IN ANY DIRECTION AND HAVE MINIMUM DIMENSIONS OF 5' X 5'.
9. DETECTABLE WARNING PAD SHALL BE 24" LONG IN THE DIRECTION OF TRAVEL AND INSTALLED ALONG THE FULL WIDTH OF THE BOTTOM OF THE SIDEWALK RAMP. MASCO CAST–IN–TACT (BLACK) OR APPROVED EQUAL.
10. SETBACK SIDEWALK RAMPS: THE MAXIMUM SLOPE SHALL FIRST BE PROVIDED IN THE RAMP ADJACENT TO THE STREET. ANY ADDITIONAL ELEVATION GAIN SHALL BE PROVIDED IN THE SIDEWALK RAMP SLOPES.

CITY OF MILWAUKIE, OREGON – PUBLIC WORKS DEPT.

Mid–Block Sidewalk Ramps

DRAWING NO. 505

APPROVED Gary Parkin 12/12
CITY ENGINEER DATE

NO.	REVISIONS	DATE	BY
1	NEW DRAWING	10/09	ZJW
2	DRAWING NUMBER CHANGED	12/10	MCP

DEC 2012

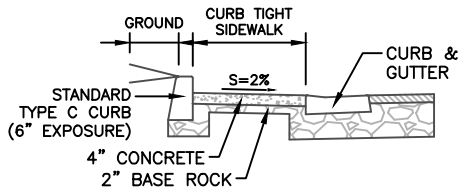

SECTION A–A

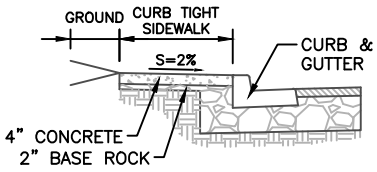

SECTION B–B

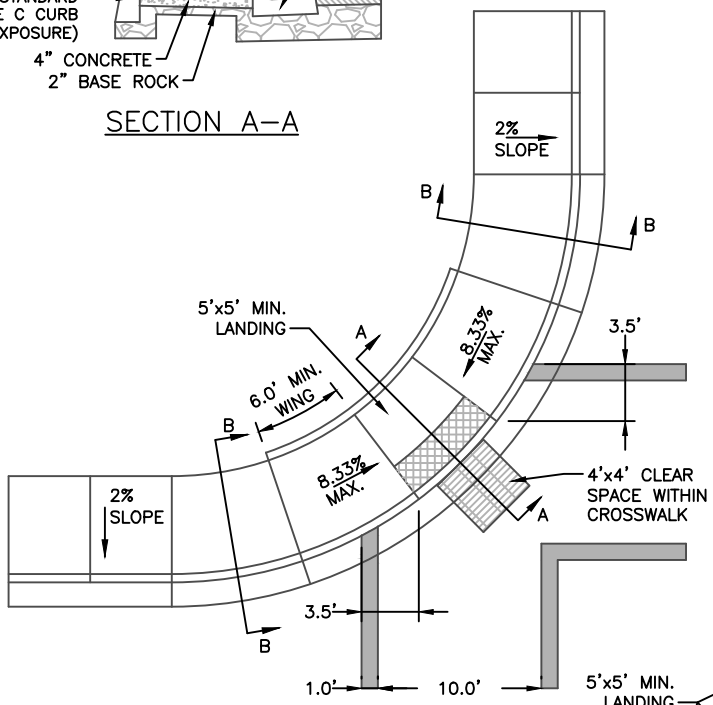

SINGLE SIDEWALK RAMP

LOCAL & NEIGHBORHOOD ROADS
CURB RADIUS < 30'

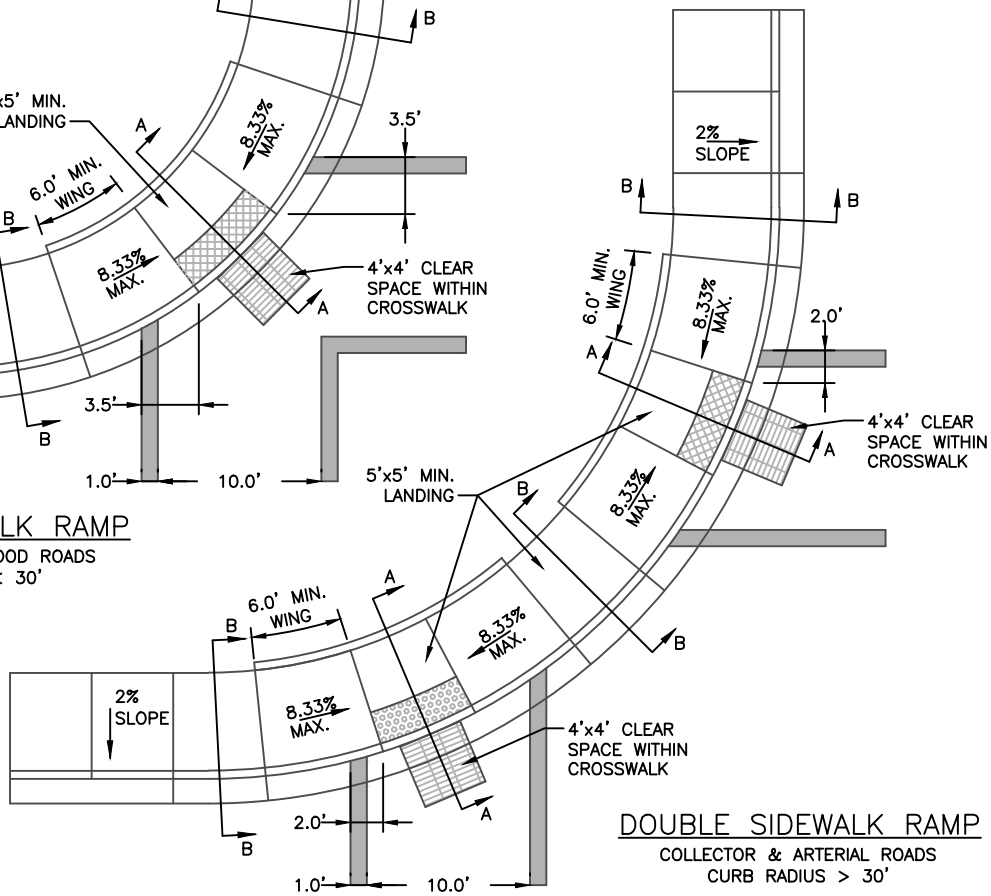

DOUBLE SIDEWALK RAMP

COLLECTOR & ARTERIAL ROADS
CURB RADIUS > 30'

NOTES

1. SIDEWALK RAMPS SHALL MEET ADA STANDARDS.
2. ALL SURFACES SHALL BE LIGHTLY BROOMED. ALL EDGES SHALL BE TOOL ROUNDED AND SHINED 3" AFTER BROOMING.
3. SAW CUT EXISTING RAMP, CURB, AND SIDEWALK THAT ARE TO BE REMOVED TO THE NEAREST JOINT.
4. CONCRETE SHALL BE 3300 PSI AT 28 DAYS WITH A SLUMP RANGE OF 2" TO 4".
5. SIDEWALK PANELS SHOULD BE SQUARE (4'X4', 5'X5', ETC.). IN NO CASE SHALL THE LENGTH OF A SIDEWALK PANEL BE GREATER THAN 1.5 TIMES THE WIDTH AND VICE VERSA.
6. BASE ROCK SHALL BE 3/4"–0 OR 1"–0 CRUSHED AGGREGATE ROCK COMPACTED TO 95% MAXIMUM DENSITY OF AASHTO T–180.
7. CURB JOINT FOR CURB TIGHT SIDEWALK SHALL BE A TROWLED JOINT WITH A 1/2" RADIUS ALONG THE BACK OF CURB.
8. LANDINGS SHALL BE PLACED AT THE TOP OF EACH RAMP. LANDING SLOPES SHALL NOT EXCEED 20:1 IN ANY DIRECTION AND HAVE MINIMUM DIMENSIONS OF 5' X 5'.
9. DETECTABLE WARNING PAD SHALL BE 24" LONG IN THE DIRECTION OF TRAVEL AND INSTALLED ALONG THE FULL WIDTH OF THE BOTTOM OF THE SIDEWALK RAMP. MASCO CAST–IN–TACT (BLACK) OR APPROVED EQUAL.

MILWAUKIE, OREGON — FOUNDED 1847

CITY OF MILWAUKIE, OREGON – PUBLIC WORKS DEPT.

Curb Tight Intersection Sidewalk Ramps

DRAWING NO. 506

APPROVED Gary Parkin 12/12
CITY ENGINEER DATE

NO.	REVISIONS	DATE	BY
1	NEW DRAWING	10/09	ZJW
2	DRAWING NUMBER CHANGED	12/10	MCP

DEC 2012

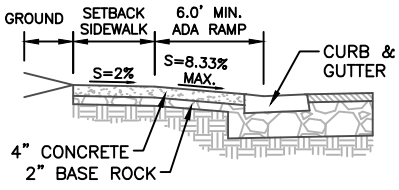

SECTION A–A

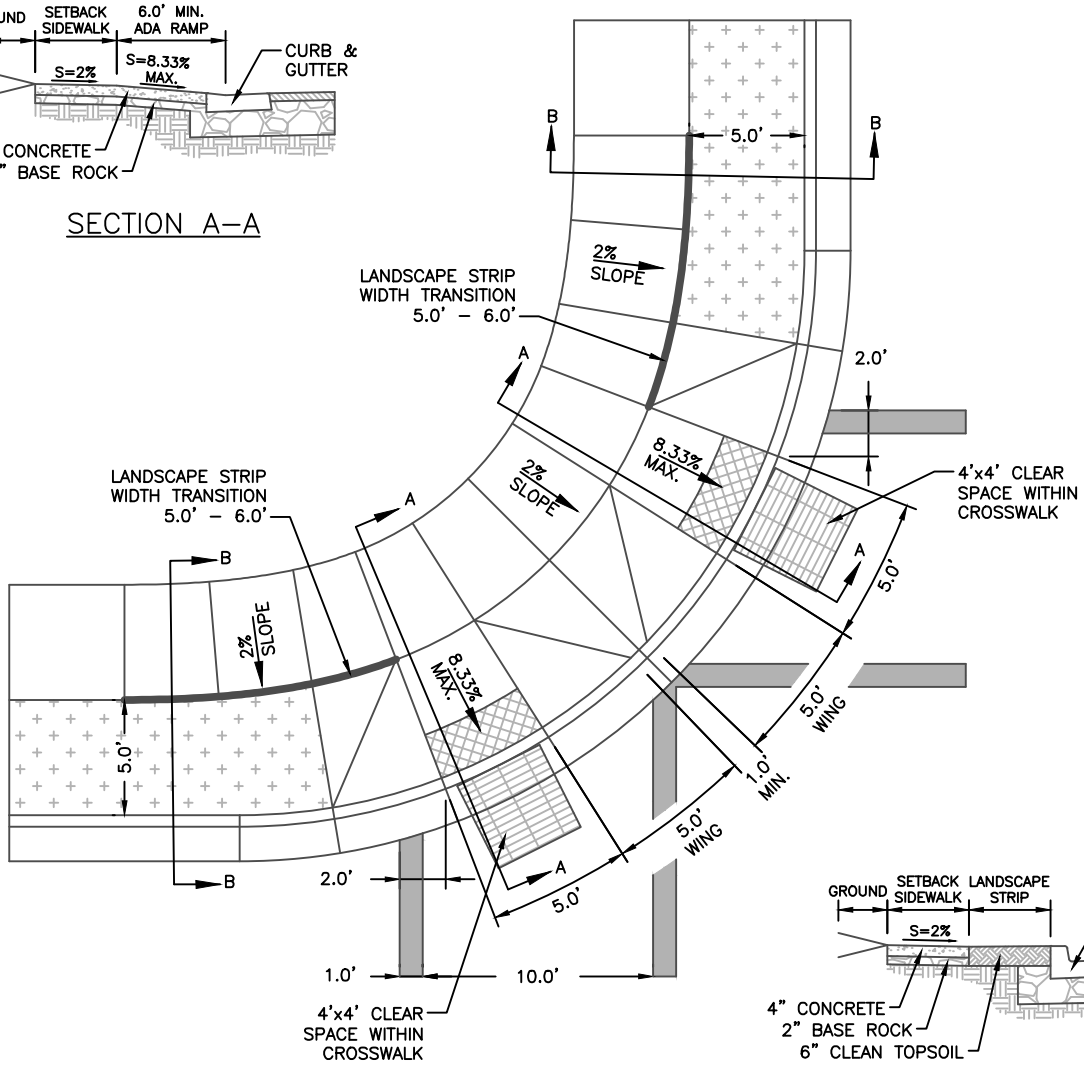

SECTION B–B

NOTES

1. SIDEWALK RAMPS SHALL MEET ADA STANDARDS.
2. ALL SURFACES SHALL BE LIGHTLY BROOMED. ALL EDGES SHALL BE TOOL ROUNDED AND SHINED 3" AFTER BROOMING.
3. SAW CUT EXISTING RAMP, CURB, AND SIDEWALK THAT ARE TO BE REMOVED TO THE NEAREST JOINT.
4. CONCRETE SHALL BE 3300 PSI AT 28 DAYS WITH A SLUMP RANGE OF 2" TO 4".
5. SIDEWALK PANELS SHOULD BE SQUARE (4'X4', 5'X5', ETC.). IN NO CASE SHALL THE LENGTH OF A SIDEWALK PANEL BE GREATER THAN 1.5 TIMES THE WIDTH AND VICE VERSA.
6. BASE ROCK SHALL BE 3/4"–0 OR 1"–0 CRUSHED AGGREGATE ROCK COMPACTED TO 95% MAXIMUM DENSITY OF AASHTO T–180.
7. CURB JOINT FOR CURB TIGHT SIDEWALK SHALL BE A TROWLED JOINT WITH A 1/2" RADIUS ALONG THE BACK OF CURB.
8. LANDINGS SHALL BE PLACED AT THE TOP OF EACH RAMP. LANDING SLOPES SHALL NOT EXCEED 20:1 IN ANY DIRECTION AND HAVE MINIMUM DIMENSIONS OF 5' X 5'.
9. DETECTABLE WARNING PAD SHALL BE 24" LONG IN THE DIRECTION OF TRAVEL AND INSTALLED ALONG THE FULL WIDTH OF THE BOTTOM OF THE SIDEWALK RAMP. MASCO CAST–IN–TACT (BLACK) OR APPROVED EQUAL.
10. SETBACK SIDEWALK RAMPS: THE MAXIMUM SLOPE SHALL FIRST BE PROVIDED IN THE RAMP ADJACENT TO THE STREET. ANY ADDITIONAL ELEVATION GAIN SHALL BE PROVIDED IN THE SIDEWALK RAMP SLOPES.

MILWAUKIE, OREGON FOUNDED 1847

CITY OF MILWAUKIE, OREGON – PUBLIC WORKS DEPT.

Setback Sidewalk Intersection Ramps

DRAWING NO. 507

APPROVED Gary Parkin 12/12
CITY ENGINEER DATE

NO.	REVISIONS	DATE	BY
1	NEW DRAWING	10/09	ZJW
2	DRAWING NUMBER CHANGED	12/10	MCP

DEC 2012

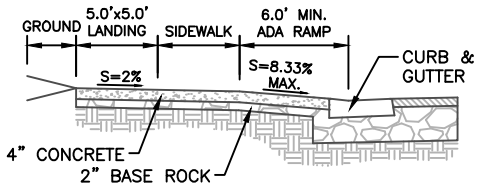

SECTION A–A

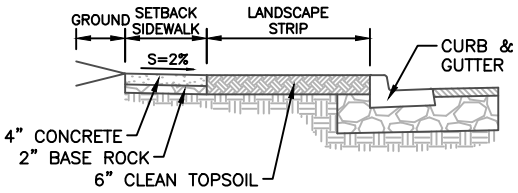

SECTION B–B

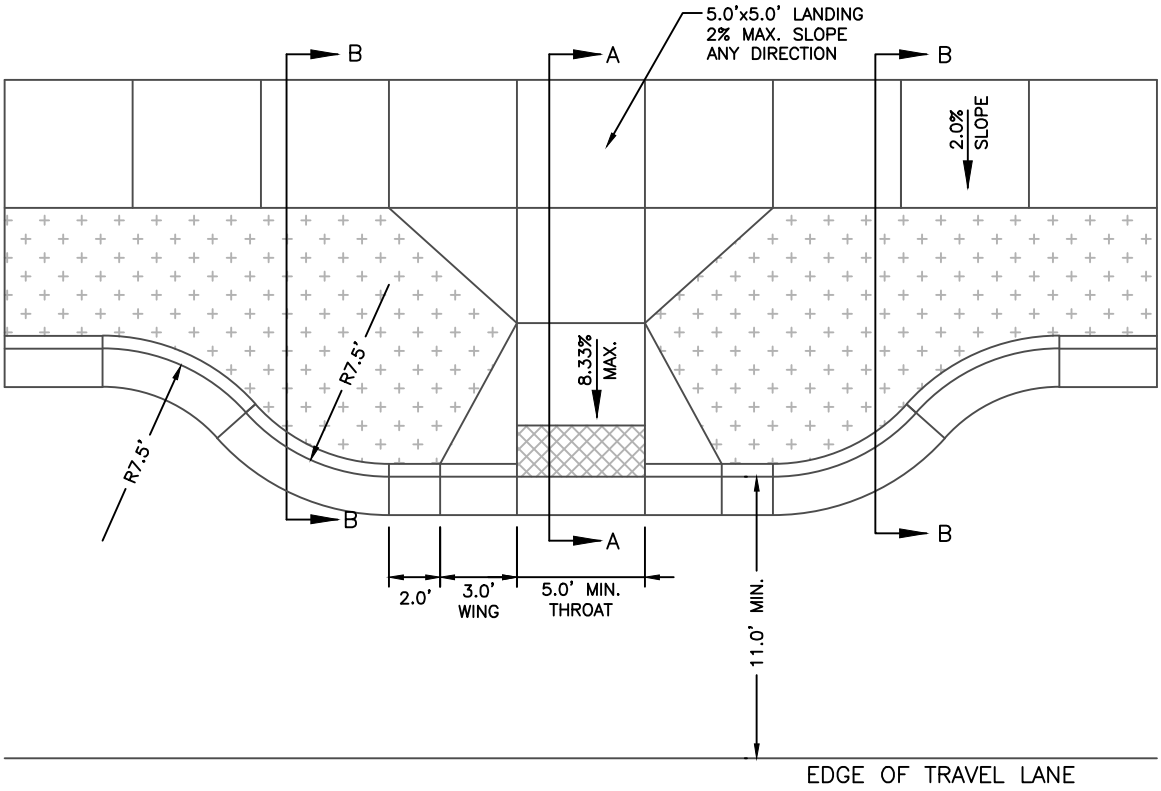

NOTES

1. SIDEWALK RAMPS SHALL MEET ADA STANDARDS.
2. ALL SURFACES SHALL BE LIGHTLY BROOMED. ALL EDGES SHALL BE TOOL ROUNDED AND SHINED 3" AFTER BROOMING.
3. SAW CUT EXISTING RAMP, CURB, AND SIDEWALK THAT ARE TO BE REMOVED TO THE NEAREST JOINT.
4. CONCRETE SHALL BE 3300 PSI AT 28 DAYS WITH A SLUMP RANGE OF 2" TO 4".
5. SIDEWALK PANELS SHOULD BE SQUARE (4'X4', 5'X5', ETC.). IN NO CASE SHALL THE LENGTH OF A SIDEWALK PANEL BE GREATER THAN 1.5 TIMES THE WIDTH AND VICE VERSA.
6. BASE ROCK SHALL BE 3/4"–0 OR 1"–0 CRUSHED AGGREGATE ROCK COMPACTED TO 95% MAXIMUM DENSITY OF AASHTO T–180.
7. CURB JOINT FOR CURB TIGHT SIDEWALK SHALL BE A TROWLED JOINT WITH A 1/2" RADIUS ALONG THE BACK OF CURB.
8. LANDINGS SHALL BE PLACED AT THE TOP OF EACH RAMP. LANDING SLOPES SHALL NOT EXCEED 20:1 IN ANY DIRECTION AND HAVE MINIMUM DIMENSIONS OF 5' X 5'.
9. DETECTABLE WARNING PAD SHALL BE 24" LONG IN THE DIRECTION OF TRAVEL AND INSTALLED ALONG THE FULL WIDTH OF THE BOTTOM OF THE SIDEWALK RAMP. MASCO CAST–IN–TACT (BLACK) OR APPROVED EQUAL.
10. SETBACK SIDEWALK RAMPS: THE MAXIMUM SLOPE SHALL FIRST BE PROVIDED IN THE RAMP ADJACENT TO THE STREET. ANY ADDITIONAL ELEVATION GAIN SHALL BE PROVIDED IN THE SIDEWALK RAMP SLOPES.

MILWAUKIE, OREGON FOUNDED 1847

CITY OF MILWAUKIE, OREGON – PUBLIC WORKS DEPT.

Mid–Block Curb Extension

DRAWING NO. 508

APPROVED Gary Parkin 12/12
CITY ENGINEER DATE

NO.	REVISIONS	DATE	BY
1	NEW DRAWING	10/09	ZJW
2	DRAWING NUMBER CHANGED	12/10	MCP

DEC 2012

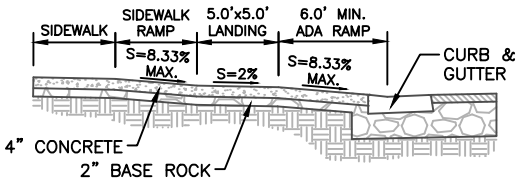

SECTION A–A

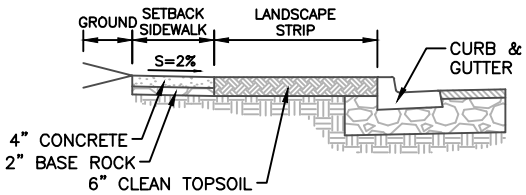

SECTION B–B

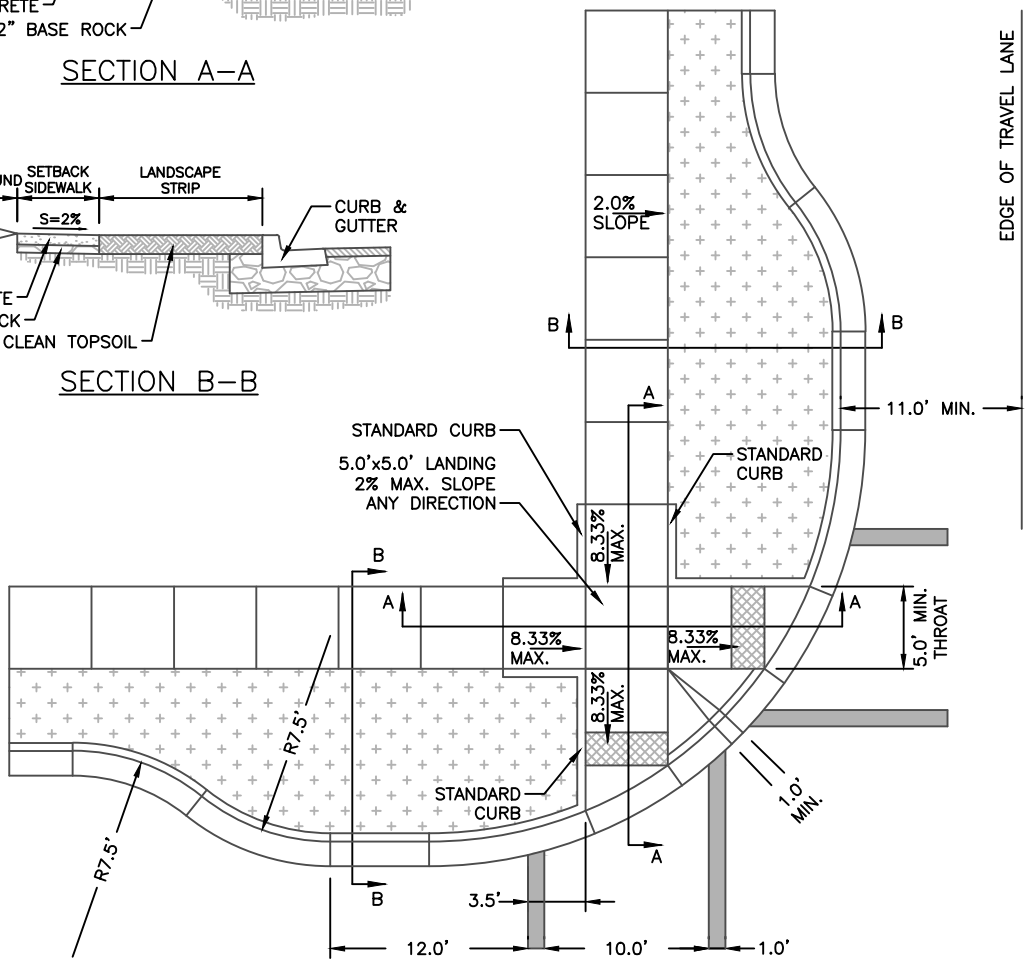

NOTES

1. SIDEWALK RAMPS SHALL MEET ADA STANDARDS.
2. ALL SURFACES SHALL BE LIGHTLY BROOMED. ALL EDGES SHALL BE TOOL ROUNDED AND SHINED 3" AFTER BROOMING.
3. SAW CUT EXISTING RAMP, CURB, AND SIDEWALK THAT ARE TO BE REMOVED TO THE NEAREST JOINT.
4. CONCRETE SHALL BE 3300 PSI AT 28 DAYS WITH A SLUMP RANGE OF 2" TO 4".
5. SIDEWALK PANELS SHOULD BE SQUARE (4'X4', 5'X5', ETC.). IN NO CASE SHALL THE LENGTH OF A SIDEWALK PANEL BE GREATER THAN 1.5 TIMES THE WIDTH AND VICE VERSA.
6. BASE ROCK SHALL BE 3/4"–0 OR 1"–0 CRUSHED AGGREGATE ROCK COMPACTED TO 95% MAXIMUM DENSITY OF AASHTO T–180.
7. CURB JOINT FOR CURB TIGHT SIDEWALK SHALL BE A TROWLED JOINT WITH A 1/2" RADIUS ALONG THE BACK OF CURB.
8. LANDINGS SHALL BE PLACED AT THE TOP OF EACH RAMP. LANDING SLOPES SHALL NOT EXCEED 20:1 IN ANY DIRECTION AND HAVE MINIMUM DIMENSIONS OF 5' X 5'.
9. DETECTABLE WARNING PAD SHALL BE 24" LONG IN THE DIRECTION OF TRAVEL AND INSTALLED ALONG THE FULL WIDTH OF THE BOTTOM OF THE SIDEWALK RAMP. MASCO CAST–IN–TACT (BLACK) OR APPROVED EQUAL.
10. SETBACK SIDEWALK RAMPS: THE MAXIMUM SLOPE SHALL FIRST BE PROVIDED IN THE RAMP ADJACENT TO THE STREET. ANY ADDITIONAL ELEVATION GAIN SHALL BE PROVIDED IN THE SIDEWALK RAMP SLOPES.

MILWAUKIE, OREGON · FOUNDED 1847

CITY OF MILWAUKIE, OREGON – PUBLIC WORKS DEPT.

Intersection Curb Extension

DRAWING NO. 509

APPROVED Gary Parkin 12/12
CITY ENGINEER DATE

NO.	REVISIONS	DATE	BY
1	NEW DRAWING	10/09	ZJW
2	DRAWING NUMBER CHANGED	12/10	MCP

DEC 2012

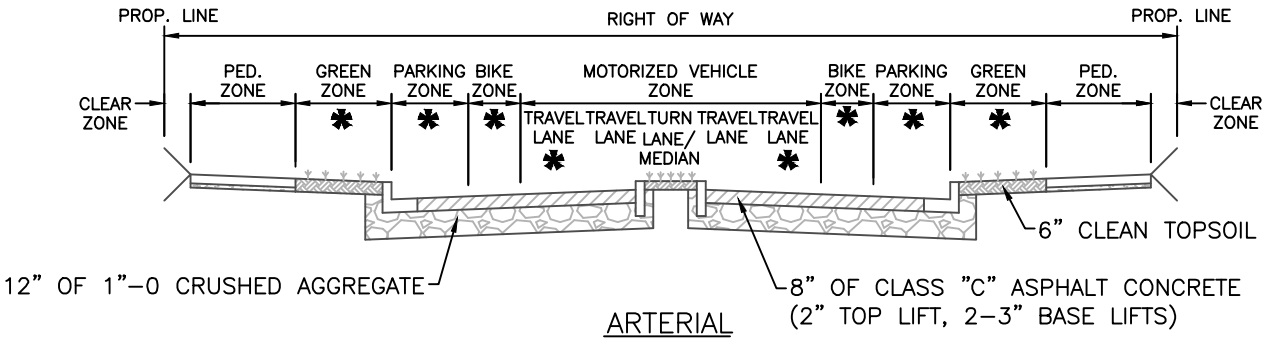

ARTERIAL

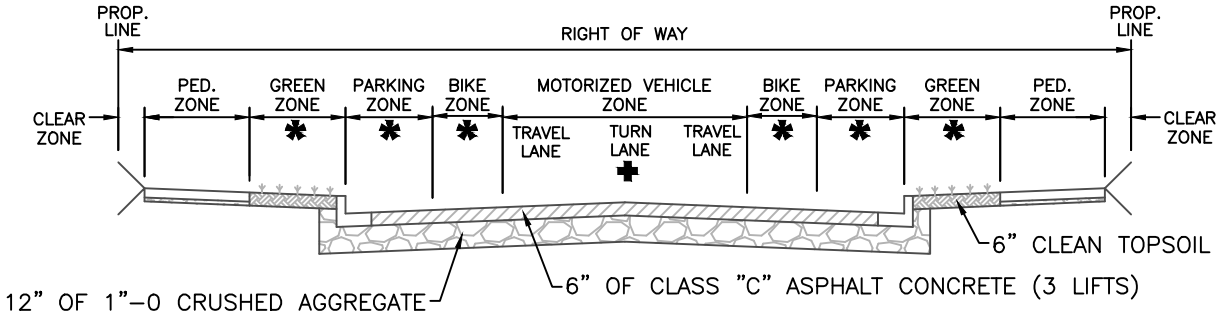

COLLECTOR

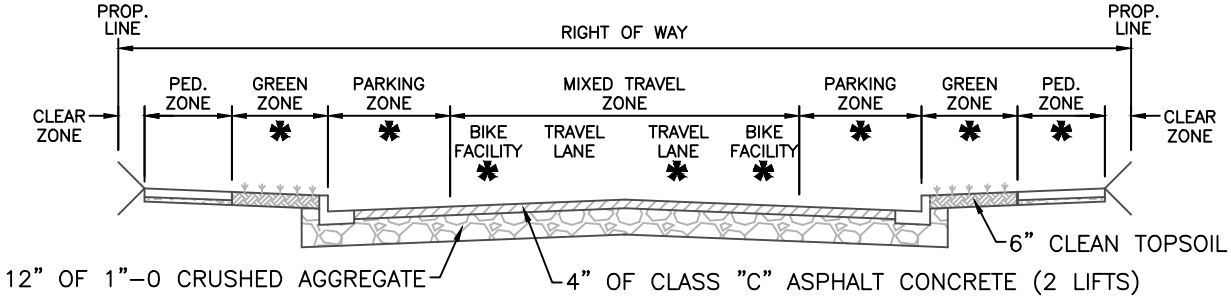

LOCAL & NEIGHBORHOOD STREETS

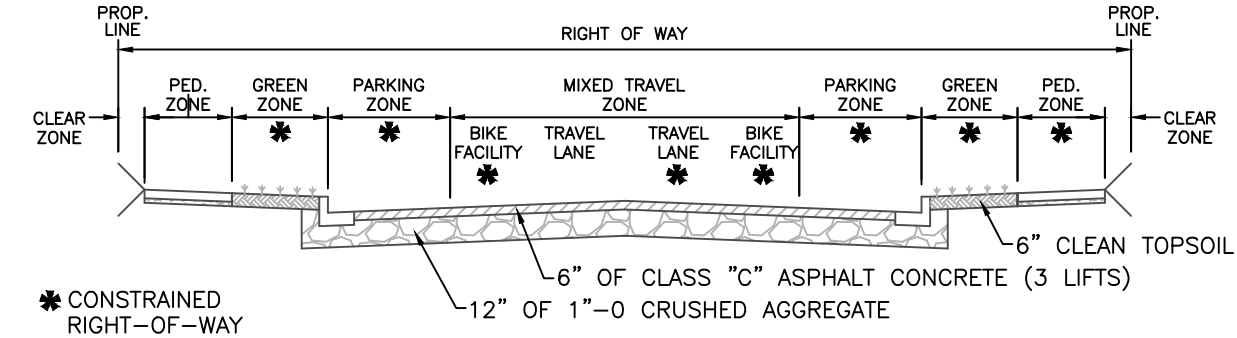

✱ CONSTRAINED RIGHT-OF-WAY OPTIONAL ELEMENT

✚ WHERE WARRANTED

LOCAL COMMERCIAL/INDUSTRIAL

CITY OF MILWAUKIE, OREGON – PUBLIC WORKS DEPT.

MILWAUKIE, OREGON FOUNDED 1847

Street Cross Sections

DRAWING NO. 510

APPROVED Gary Parkin 12/12

CITY ENGINEER DATE

NO.	REVISIONS	DATE	BY
1	UPDATED FOR CODE CHANGES	10/09	ZJW
2	DRAWING NUMBER CHANGED	12/10	MCP

DEC 2012

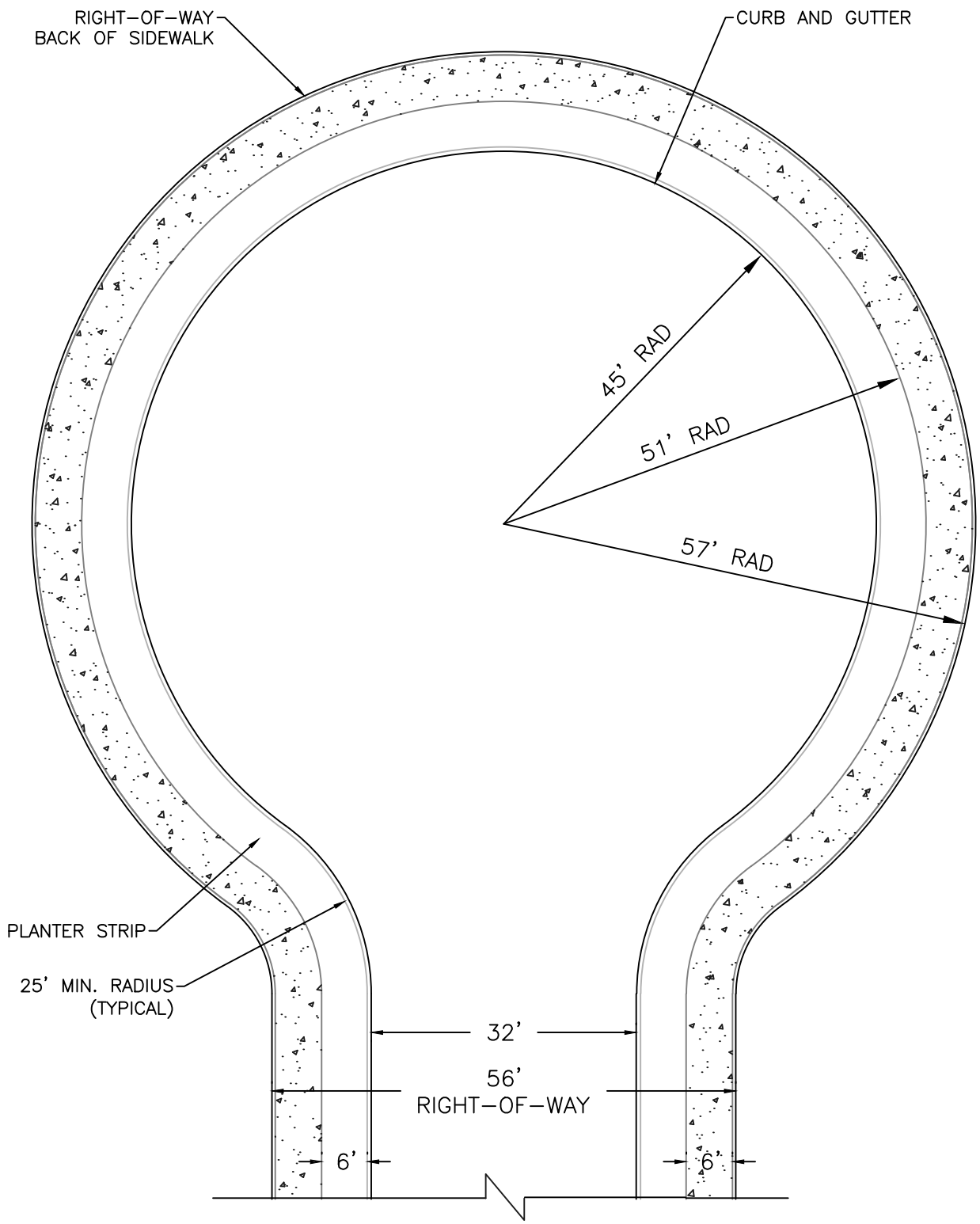

CITY OF MILWAUKIE, OREGON – PUBLIC WORKS DEPT.

Cul De Sac

DRAWING NO. **511**

APPROVED Gary Parkson 12/12

CITY ENGINEER DATE

NO.	REVISIONS	DATE	BY
1	DRAWING NUMBER CHANGED	12/10	MCP

DEC 2012

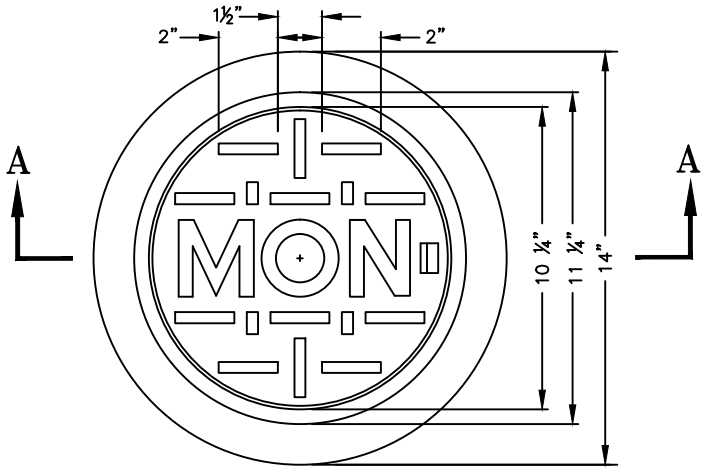

TOP VIEW

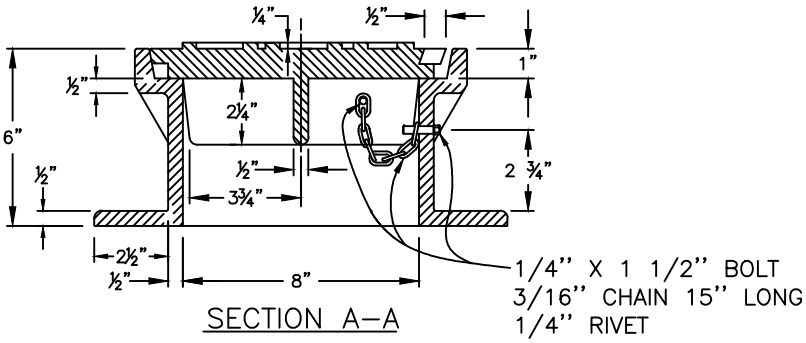

SECTION A–A

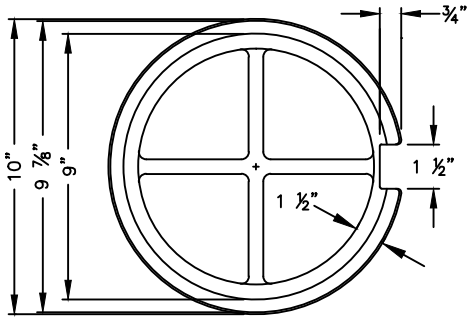

BOTTOM VIEW

NOTES:

1. MACHINE BEARING FACES OF COVER AND CASE TO INSURE POSITIVE FITS.
2. CASTINGS SHALL BE GRAY IRON ASTM A–48 CLASS 40, AND SHALL CONFORM FURTHER TO APPLICABLE SECTION OF THESE SPECIFICATIONS.

CITY OF MILWAUKIE, OREGON – PUBLIC WORKS DEPT.

Street Monument

DRAWING NO. 512

APPROVED Gary Parkin 12/12

CITY ENGINEER DATE

NO.	REVISIONS	DATE	BY
1	DRAWING NUMBER CHANGED	12/10	MCP

DEC 2012

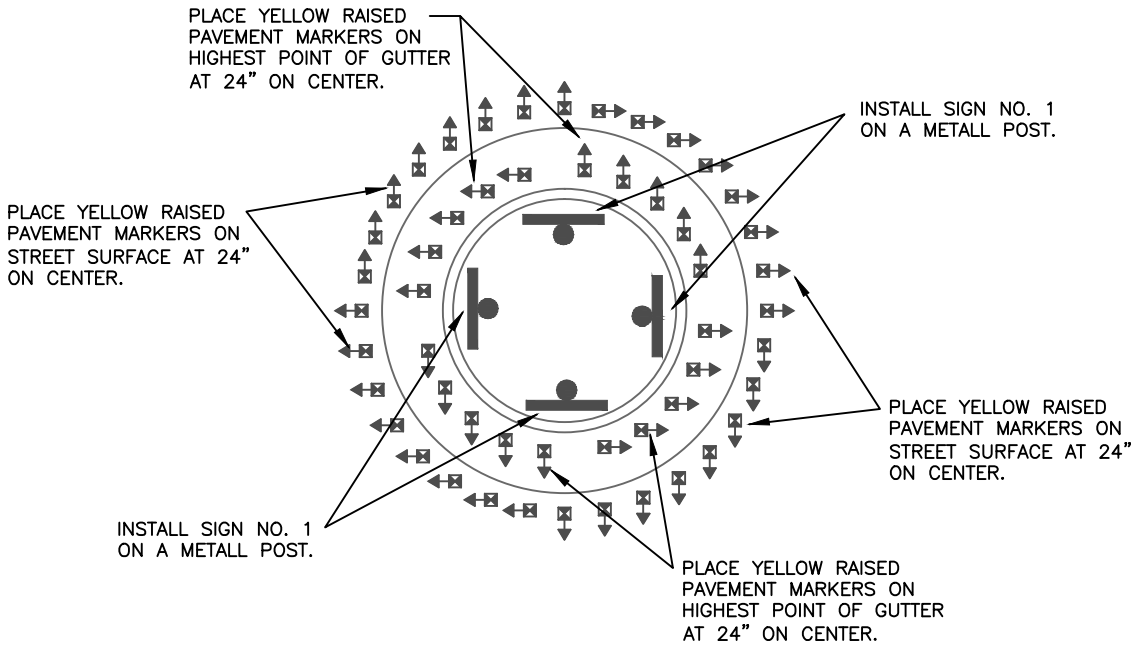

TRAFFIC ISLAND DETAIL
NTS

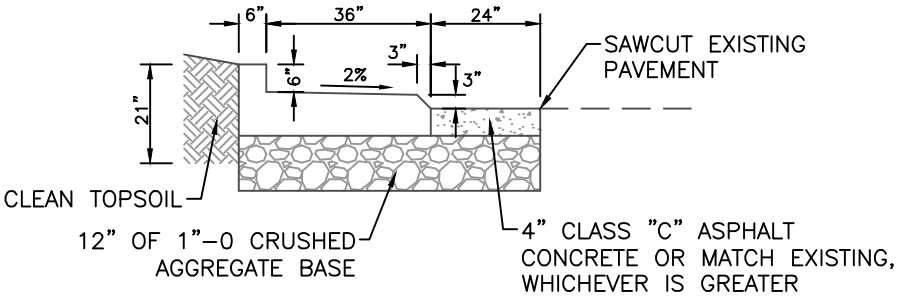

TRAFFIC ISLAND CURB DETAIL
NTS

REFLECTIVE MARKER

SIGN #1
CITY OF PORTLAND
R5500

SIGN # 2
CITY OF PORTLAND
W1700

SIGN # 3
CITY OF PORTLAND
W4040

NOTES:

1. PLACE SIGN NO. 2 AND 3 ON A METAL POST 175 FEET FROM THE TRAFFIC ISLAND ON EACH THROUGH LEG OF THE INTERSECTION.
2. NO PARKING IS ALLOWED WITHIN 40 FEET OF A TRAFFIC ISLAND INTERSECTION CURB RETURN.
3. YELLOW 4" GORE STRIPE WITH YELLOW RAISED PAVEMENT MARKERS, 5 FEET ON CENTER, IS REQUIRED WITHIN 50 FEET OF A TRAFFIC ISLAND INTERSECTION CURB RETURN ON EACH THROUGH LEG OF THE INTERSECTION TO DIRECT TRAFFIC AROUND THE ISLAND.

CITY OF MILWAUKIE, OREGON – PUBLIC WORKS DEPT.

Traffic Island

DRAWING NO. 513

APPROVED Gary Parkin 12/12
CITY ENGINEER DATE

NO.	REVISIONS	DATE	BY
1	DRAWING NUMBER CHANGED	12/10	MCP

DEC 2012

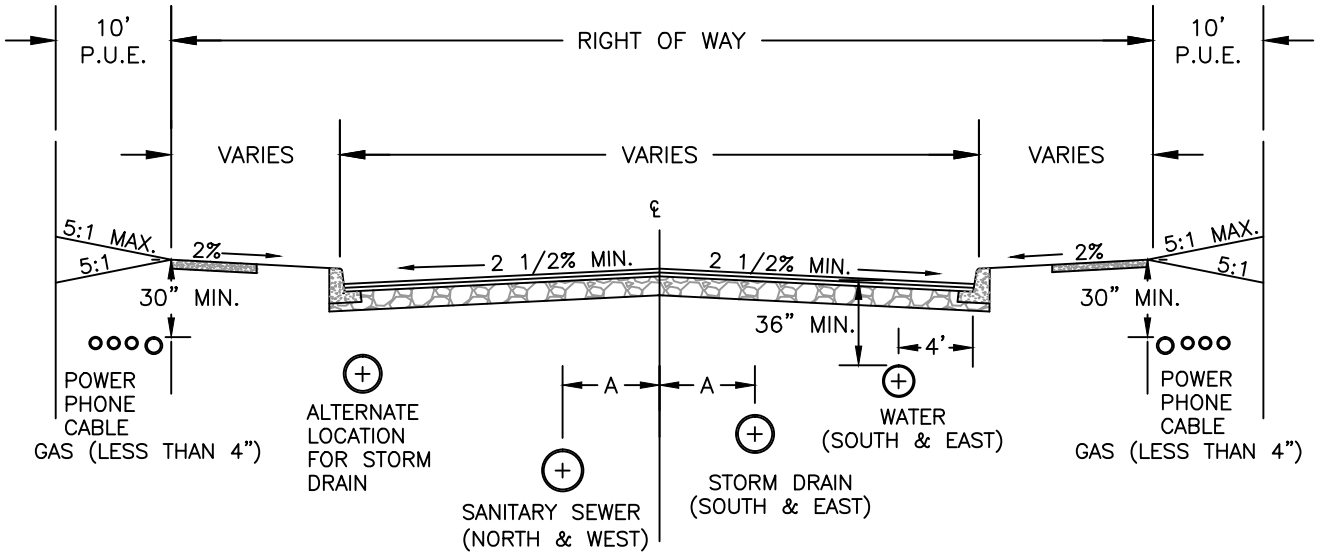

NOTE: STREET TREES, LIGHT POLES, AND FIRE HYDRANTS SHALL BE LOCATED BETWEEN THE SIDEWALK AND THE CURB.

STREET TYPE	RIGHT OF WAY (FT.)	NO. OF LANES	DISTANCE FROM CENTER "A"
LOCAL	40 FT	2	6 FT
LOCAL	50 FT	2	6 FT
COLLECTOR	60 FT	2	6 FT
COLLECTOR	70 FT	3	13 FT
ARTERIAL	80 FT	3	13 FT
COMMERCIAL & INDUSTRIAL	60 FT	2	6 FT
COMMERCIAL & INDUSTRIAL	60 FT	3	13 FT
COMMERCIAL & INDUSTRIAL	70 FT	3	13 FT
COMMERCIAL & INDUSTRIAL	70 FT	4	7 & 19 FT

MILWAUKIE, OREGON FOUNDED 1847

CITY OF MILWAUKIE, OREGON – PUBLIC WORKS DEPT.

Utility Placement

DRAWING NO. 514

APPROVED Gary Parkin 12/12

CITY ENGINEER DATE

NO.	REVISIONS	DATE	BY
1	DRAWING NUMBER CHANGED	12/10	MCP

DEC 2012

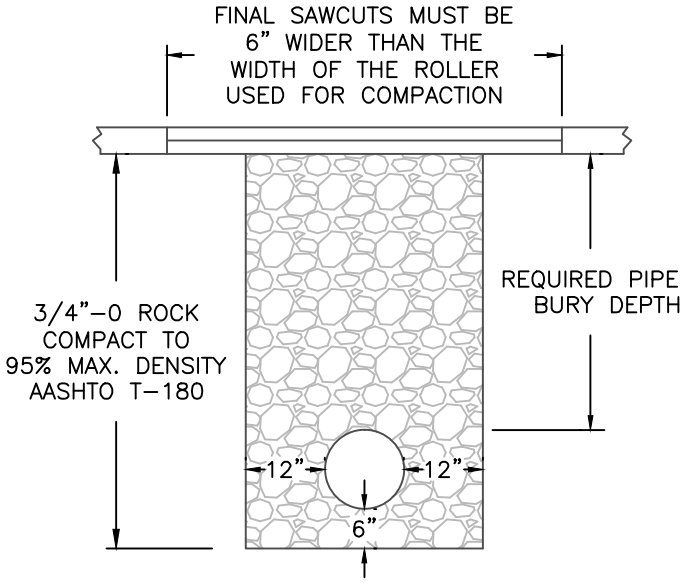

TRENCHES WITHIN PAVED AREAS

ASPHALT REPLACEMENT DEPTH	
CLASSIFICATION	DEPTH (IN.)
ARTERIAL/INDUSTRIAL	8 OR EXISTING
COLLECTOR	6 OR EXISTING
LOCAL	4 OR EXISTING

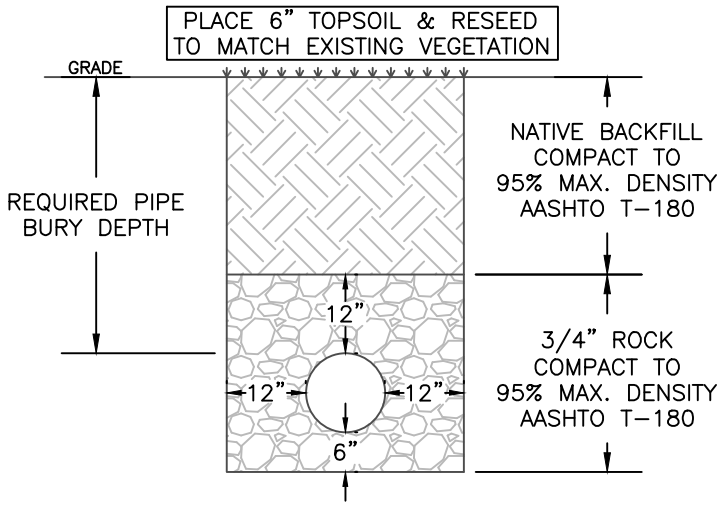

TRENCHES OUTSIDE OF PAVED AREAS

NOTES:

1. ADDITIONAL REPAIR IS REQUIRED FOR STREETS PAVED WITHIN THE LAST 5 YEARS. SEE STANDARD DETAIL NO. 516.
2. PAVING SHALL CONSIST OF CLASS "C" MODIFIED ASPHALT CONCRETE AND BE PLACED IN LIFTS. EACH LIFT OF PAVEMENT SHALL HAVE A MAXIMUM DEPTH OF 3" & MINIMUM DEPTH OF 2".
3. INFRARED ASPHALT REPAIRS MAY BE REQUIRED AT THE DISCRETION OF THE ENGINEERING DIRECTOR.
4. UNDERMINED, BROKEN OR CRACKED PAVEMENT EDGES SHALL BE SAWCUT AND REMOVED AT THE DISCRETION OF THE ENGINEERING DIRECTOR.
5. CONTROL DENSITY FILL (CDF) MAY BE REQUIRED AT ENGINEER'S DISCRETION.

CITY OF MILWAUKIE, OREGON – PUBLIC WORKS DEPT.

Trench Patch

DRAWING NO. 515

APPROVED Gary Parkin 12/12
CITY ENGINEER DATE

NO.	REVISIONS	DATE	BY
1	DRAWING NUMBER CHANGED	12/10	MCP
2	ADDED 8" ASPHALT FOR INDUSTRIAL AREAS	12/11	MCP
3	REVISED NOTES	12/12	MTC

DEC 2012

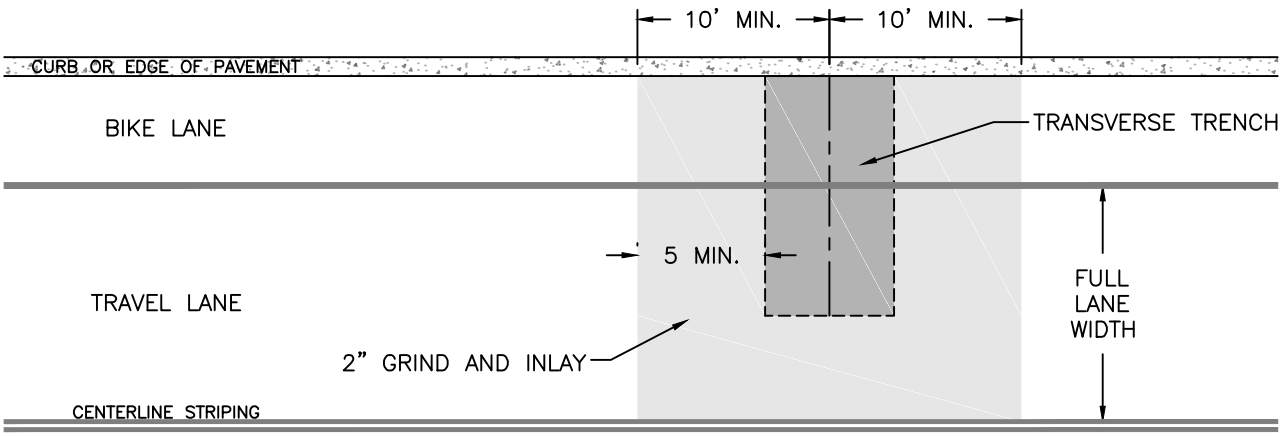

TRANSVERSE TRENCH

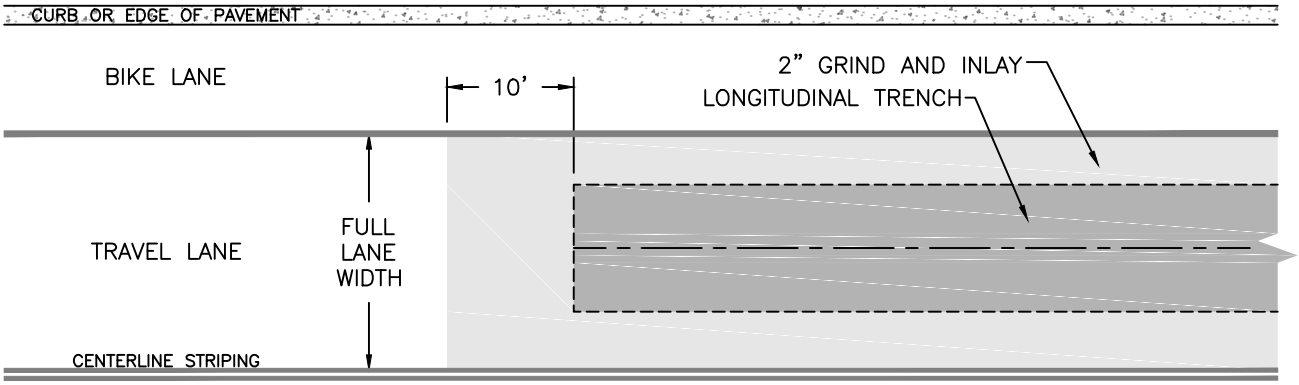

LONGITUDINAL TRENCH

NOTES:

1. CALL FOR INSPECTION PRIOR TO PAVING TRENCH TO DISCUSS PREP–WORK WITH INSPECTOR.
2. ASPHALT WITHIN TRENCH AREA IS TO BE REPLACED IN 2" LIFTS BACK TO PREVIOUS GRADE. SEE DETAIL 515 FOR TRENCH REPAIR STANDARDS.
3. LIMITS OF GRIND DESCRIBED ABOVE MUST AT LEAST 2" DEEP FOR ENTIRE AREA. ONCE THIS IS COMPLETE, THE FINAL LIFT MAY BE APPLIED AFTER INSPECTION.
4. ANY TRANSVERSE CUT INTO A LANE REQUIRES A FULL LANE WIDTH, 2" GRIND AND INLEY REPLACEMENT (EXAMPLE: IF THE BIKE LANE IS CUT INTO BUT NOT THE TRAVEL LANE, ONLY THE BIKE LANE WILL REQUIRE A FULL WIDTH 2" GRIND AND INLAY AS SHOWN).

CITY OF MILWAUKIE, OREGON – PUBLIC WORKS DEPT.

Asphalt Repair for Newly Paved Roads

DRAWING NO. 516

APPROVED Gary Parkin 12/12
CITY ENGINEER DATE

NO.	REVISIONS	DATE	BY
1	DRAWING NUMBER CHANGED	12/10	MCP
2	RECREATED DRAWING	12/12	MCP

DEC 2012

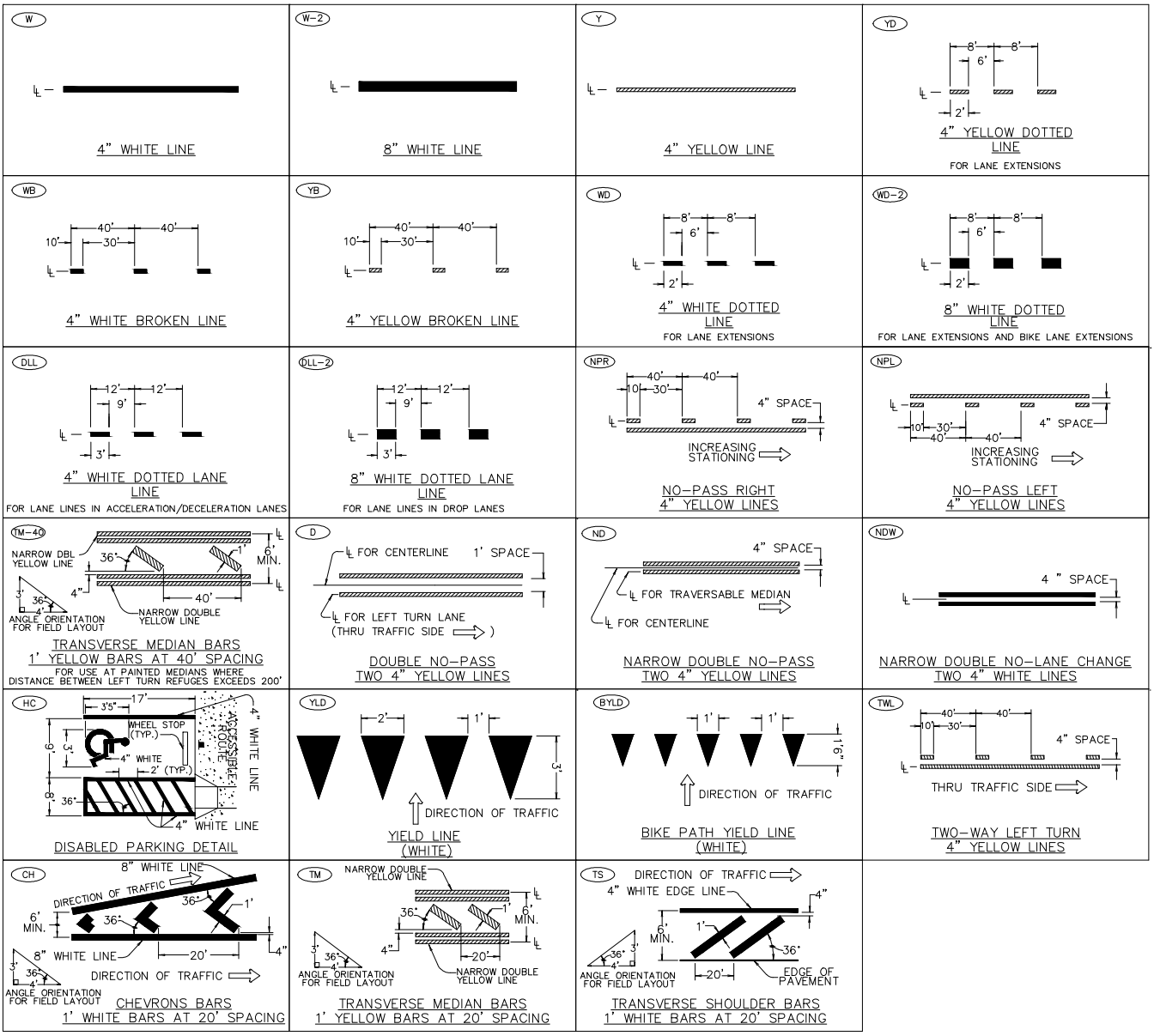

L E G E N D

⟸ DIRECTION OF TRAFFIC, INCREASING STATIONING, OR THRU TRAFFIC SIDE

℄ — LANE LINE DIMENSIONS ARE SHOWN ON THE STRIPING PLANS

MILWAUKIE, OREGON · FOUNDED 1847

CITY OF MILWAUKIE, OREGON – PUBLIC WORKS DEPT.

Pavement Marking Standard Detail Blocks

DRAWING NO. 517

APPROVED Gary Parkison 12/12

CITY ENGINEER DATE

NO.	REVISIONS	DATE	BY
1	DRAWING CREATED	10/12	MTC

DEC 2012

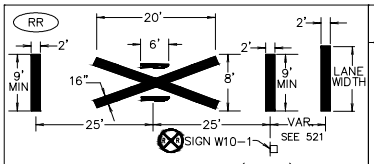

RAILROAD CROSSING (WHITE)

INSTALL PER ODOT RAIL CROSSING ORDER OR AS SHOWN. FOR LETTER PROPORTION DETAILS, SEE CURRENT VERSION OF STANDARD HIGHWAY SIGNS

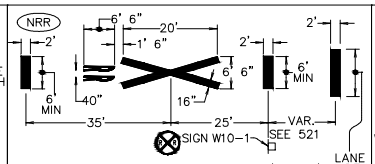

NARROW RAILROAD CROSSING (WHITE)

INSTALL PER ODOT RAIL CROSSING ORDER OR AS SHOWN. FOR LETTER PROPORTION DETAILS, SEE CURRENT VERSION OF STANDARD HIGHWAY SIGNS

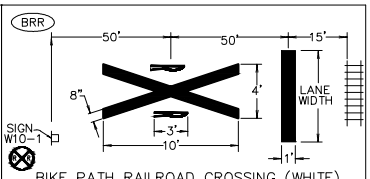

BIKE PATH RAILROAD CROSSING (WHITE)

INSTALL PER ODOT RAIL CROSSING ORDER OR AS SHOWN. FOR LETTER PROPORTION DETAILS, SEE CURRENT VERSION OF STANDARD HIGHWAY SIGNS

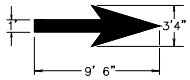

STRAIGHT ARROW

FOR ARROW PROPORTION DETAILS, SEE CURRENT VERSION OF STANDARD HIGHWAY SIGNS

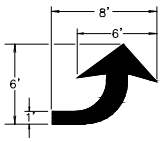

LEFT TURN ARROW

FOR ARROW PROPORTION DETAILS, SEE CURRENT VERSION OF STANDARD HIGHWAY SIGNS

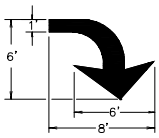

RIGHT TURN ARROW

FOR ARROW PROPORTION DETAILS, SEE CURRENT VERSION OF STANDARD HIGHWAY SIGNS

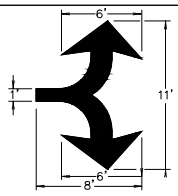

RIGHT TURN LEFT TURN ARROW

FOR ARROW PROPORTION DETAILS, SEE CURRENT VERSION OF STANDARD HIGHWAY SIGNS

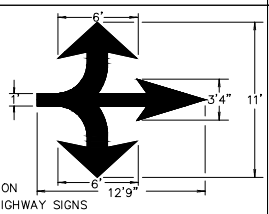

RIGHT TURN STRAIGHT LEFT TURN ARROW

FOR ARROW PROPORTION DETAILS, SEE CURRENT VERSION OF STANDARDHIGHWAY SIGNS

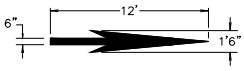

ELONGATED STRAIGHT ARROW

FOR ARROW PROPORTION DETAILS, SEE CURRENT VERSION OF STANDARD HIGHWAY SIGNS

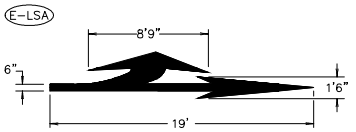

ELONGATED LEFT TURN STRAIGHT ARROW

FOR ARROW PROPORTION DETAILS, SEE CURRENT VERSION OF STANDARD HIGHWAY SIGNS

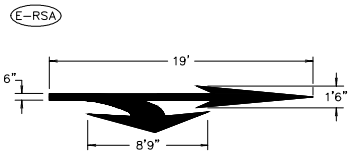

ELONGATED RIGHT TURN STRAIGHT ARROW

FOR ARROW PROPORTION DETAILS, SEE CURRENT VERSION OF STANDARD HIGHWAY SIGNS

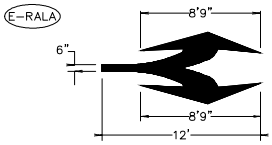

ELONGATED RIGHT TURN LEFT TURN ARROW

FOR ARROW PROPORTION DETAILS, SEE CURRENT VERSION OF STANDARD HIGHWAY SIGNS

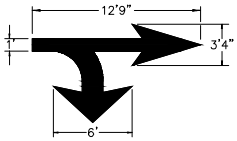

RIGHT TURN STRAIGHT ARROW

FOR ARROW PROPORTION DETAILS, SEE CURRENT VERSION OF STANDARD HIGHWAY SIGNS

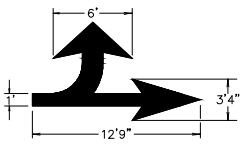

LEFT TURN STRAIGHT ARROW

FOR ARROW PROPORTION DETAILS, SEE CURRENT VERSION OF STANDARD HIGHWAY SIGNS

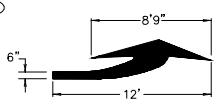

ELONGATED LEFT TURN ARROW

FOR ARROW PROPORTION DETAILS, SEE CURRENT VERSION OF STANDARD HIGHWAY SIGNS

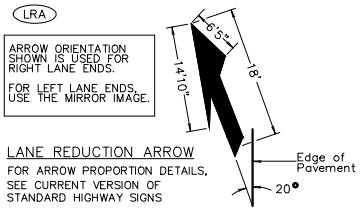

LANE REDUCTION ARROW

FOR ARROW PROPORTION DETAILS, SEE CURRENT VERSION OF STANDARD HIGHWAY SIGNS

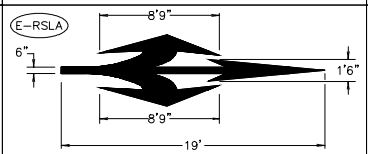

ELONGATED RIGHT TURN STRAIGHT LEFT TURN ARROW

FOR ARROW PROPORTION DETAILS, SEE CURRENT VERSION OF STANDARD HIGHWAY SIGNS

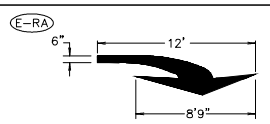

ELONGATED RIGHT TURN ARROW

FOR ARROW PROPORTION DETAILS, SEE CURRENT VERSION OF STANDARD HIGHWAY SIGNS

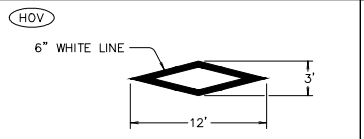

HIGH-OCCUPANCY VEHICLE DIAMOND DETAIL

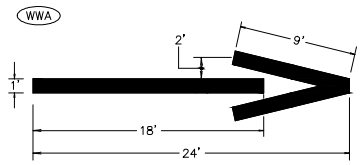

WRONG-WAY ARROW

NOTES:

1. CENTER PAVEMENT MARKINGS WITHIN THE LANE WIDTH.

2. ARROW AND LETTER DIMENSIONS NOMINAL, EXCLUDING WWA.

CITY OF MILWAUKIE, OREGON – PUBLIC WORKS DEPT.

Pavement Marking Standard Detail Blocks

DRAWING NO. 518

APPROVED Gary Parkin 12/12

CITY ENGINEER DATE

NO.	REVISIONS	DATE	BY
1	DRAWING CREATED	10/12	MTC

DEC 2012

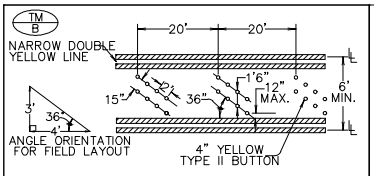

TRANSVERSE MEDIAN BAR SUBSTITUTION BUTTON

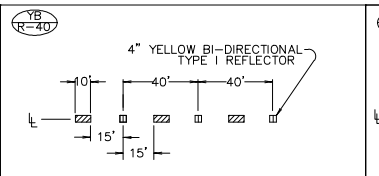

YELLOW BROKEN LINE SUPPLEMENTATION REFLECTORS WITH 4" YELLOW BROKEN LINE

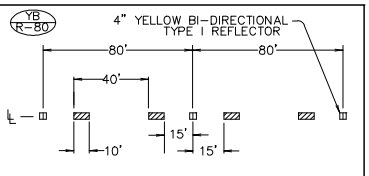

YELLOW BROKEN LINE SUPPLEMENTATION REFLECTORS WITH 4" YELLOW BROKEN LINE

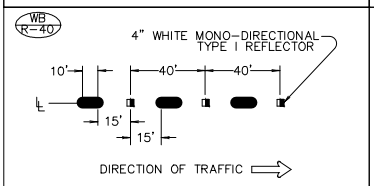

WHITE BROKEN LINE SUPPLEMENTATION REFLECTORS WITH 4" WHITE BROKEN LINE

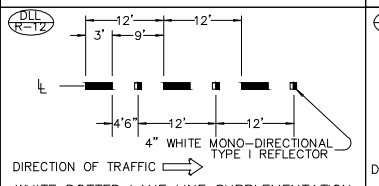

WHITE DOTTED LANE LINE SUPPLEMENTATION REFLECTORS WITH 4" WHITE DOTTED LANE LINE

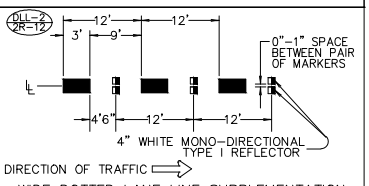

WIDE DOTTED LANE LINE SUPPLEMENTATION REFLECTORS WITH 8" WHITE DOTTED LANE LINE

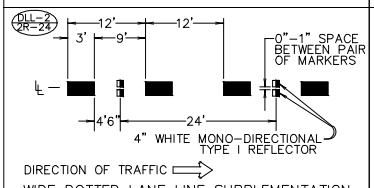

WIDE DOTTED LANE LINE SUPPLEMENTATION REFLECTORS WITH 8" WHITE DOTTED LANE LINE

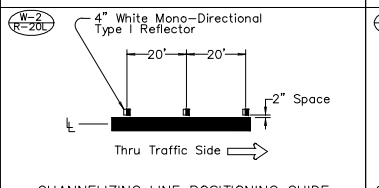

CHANNELIZING LINE POSITIONING GUIDE REFLECTORS WITH 8" WHITE LINE

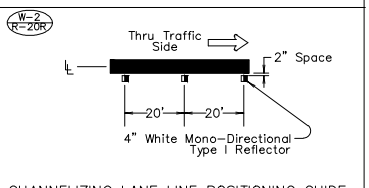

CHANNELIZING LANE LINE POSITIONING GUIDE REFLECTORS WITH 8" WHITE LINE

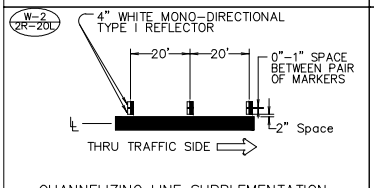

CHANNELIZING LINE SUPPLEMENTATION REFLECTORS WITH 8" WHITE LINE

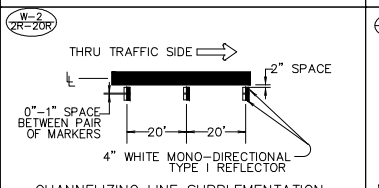

CHANNELIZING LINE SUPPLEMENTATION REFLECTORS WITH 8" WHITE LINE

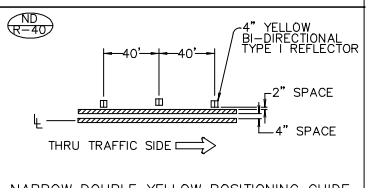

NARROW DOUBLE YELLOW POSITIONING GUIDE REFLECTORS WITH TWO 4" YELLOW LINES

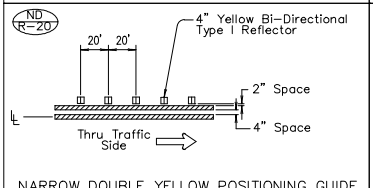

NARROW DOUBLE YELLOW POSITIONING GUIDE REFLECTORS WITH TWO 4" YELLOW LINES

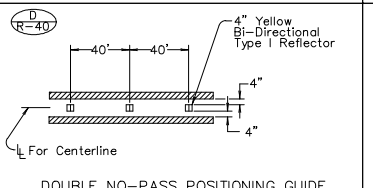

DOUBLE NO-PASS POSITIONING GUIDE REFLECTORS WITH TWO 4" YELLOW LINES

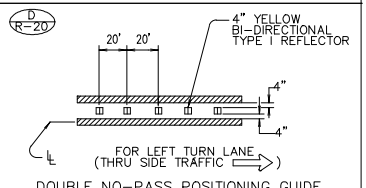

DOUBLE NO-PASS POSITIONING GUIDE REFLECTORS WITH TWO 4" YELLOW LINES

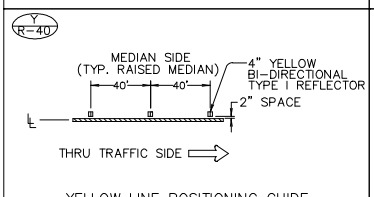

YELLOW LINE POSITIONING GUIDE REFLECTORS WITH 4" YELLOW LINE

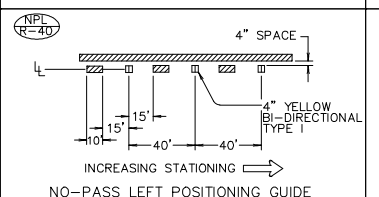

NO-PASS LEFT POSITIONING GUIDE REFLECTORS WITH 4" YELLOW LINES

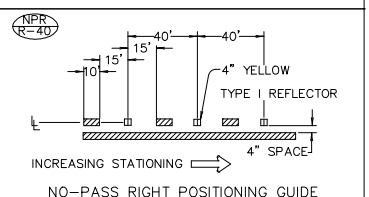

NO-PASS RIGHT POSITIONING GUIDE REFLECTORS WITH 4" YELLOW LINES

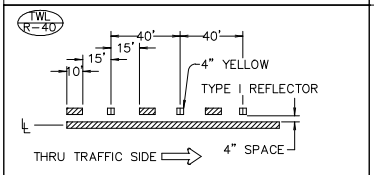

TWO WAY LEFT TURN POSITIONING GUIDE REFLECTORS WITH 4" YELLOW LINES

NOTES:

1. SURFACE MOUNT RAISED PAVEMENT MARKERS (RPMS) UNLESS OTHERWISE SPECIFIED.

◨ MONO-DIRECTIONAL CRYSTAL WHITE MARKER REFLECTS WHITE TO THE LEFT IN THIS SYMBOL

◫ BI-DIRECTIONAL YELLOW MARKER REFLECTS YELLOW BOTH LEFT AND RIGHT IN THIS SYMBOL

MILWAUKIE, OREGON FOUNDED 1847

CITY OF MILWAUKIE, OREGON – PUBLIC WORKS DEPT.

Pavement Marking Standard Detail Blocks

DRAWING NO. 519

APPROVED Gary Parkin 12/12

CITY ENGINEER DATE

NO.	REVISIONS	DATE	BY
1	DRAWING CREATED	10/12	MTC

DEC 2012

CW

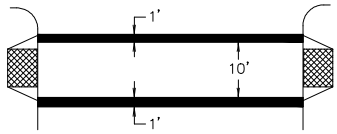

STANDARD CROSSWALK
TWO 1' WHITE BARS

INSTALL PER STANDARD DRAWING 522C

CW-SC

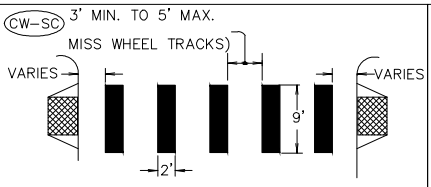

STAGGERED CONTINENTAL CROSSWALK
2' WHITE BARS

INSTALL PER STANDARD DRAWING 522C

P

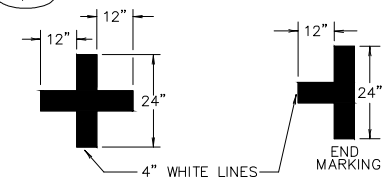

ON-STREET PARKING DETAIL

BSR

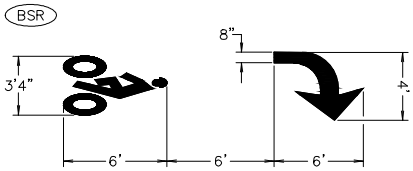

BIKE RIGHT TURN STENCIL

CENTER MARKING WITHIN LANE WIDTH
FOR PROPORTION DETAILS, SEE CURRENT VERSION OF STANDARD HIGHWAY SIGNS

BS

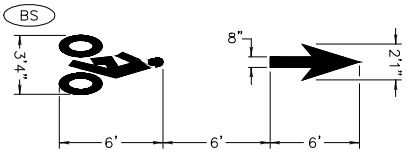

BIKE LANE STANDARD STENCIL

CENTER MARKING WITHIN LANE WIDTH
FOR PROPORTION DETAILS, SEE CURRENT VERSION OF STANDARD HIGHWAY SIGNS

BSL

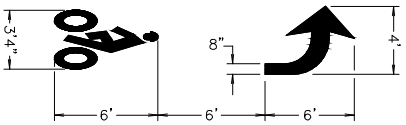

BIKE LEFT TURN STENCIL

CENTER MARKING WITHIN LANE WIDTH
FOR PROPORTION DETAILS, SEE CURRENT VERSION OF STANDARD HIGHWAY SIGNS

SHA

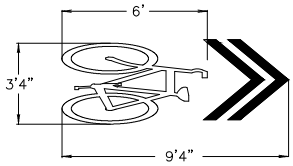

BIKE SHARROW STENCIL

CENTER MARKING WITHIN LANE WIDTH

S

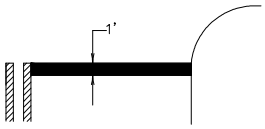

STOP BAR
1' WHITE BAR

INSTALL PER STANDARD DRAWING 522A

S-2

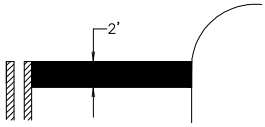

STOP BAR - LARGE
2' WHITE BAR

INSTALL PER STANDARD DRAWING 522A

SCH

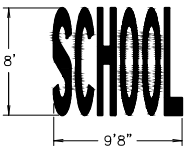

SCHOOL

CENTER MARKING WITHIN WIDTH OF TWO LANES
FOR LETTER PROPORTION DETAILS, SEE CURRENT VERSION OF STANDARD HIGHWAY SIGNS

SCH-LG

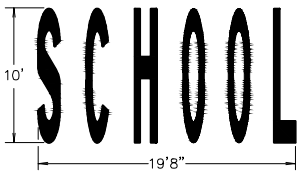

SCHOOL - LARGE

CENTER MARKING WITHIN WIDTH OF TWO LANES
FOR LETTER PROPORTION DETAILS, SEE CURRENT VERSION OF STANDARD HIGHWAY SIGNS

CRS-LG

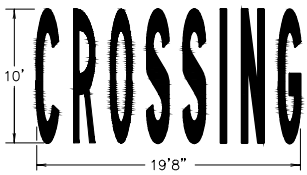

CROSSING - LARGE

CENTER MARKING WITHIN WIDTH OF TWO LANES
FOR LETTER PROPORTION DETAILS, SEE CURRENT VERSION OF STANDARD HIGHWAY SIGNS

BUS

BUS

CENTER MARKING WITHIN
LANE WIDTH

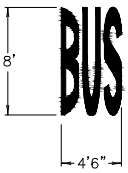

FOR LETTER PROPORTION DETAILS, SEE CURRENT VERSION OF STANDARD HIGHWAY SIGNS

XNG

X-ING

CENTER MARKING WITHIN
LANE WIDTH

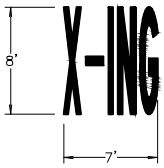

FOR LETTER PROPORTION DETAILS, SEE CURRENT VERSION OF STANDARD HIGHWAY SIGNS

ON

ONLY

CENTER MARKING WITHIN
LANE WIDTH

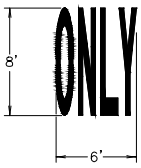

FOR LETTER PROPORTION DETAILS, SEE CURRENT VERSION OF STANDARD HIGHWAY SIGNS

NOTES:

1. ARROW, LETTER, AND BIKE SYMBOL DIMENSIONS NOMINAL.

CITY OF MILWAUKIE, OREGON - PUBLIC WORKS DEPT.

Pavement Marking Standard Detail Blocks

DRAWING NO.

520

APPROVED Gary Pedersen 12/12

CITY ENGINEER DATE

NO.	REVISIONS	DATE	BY
1	DRAWING CREATED	10/12	MTC

DEC 2012

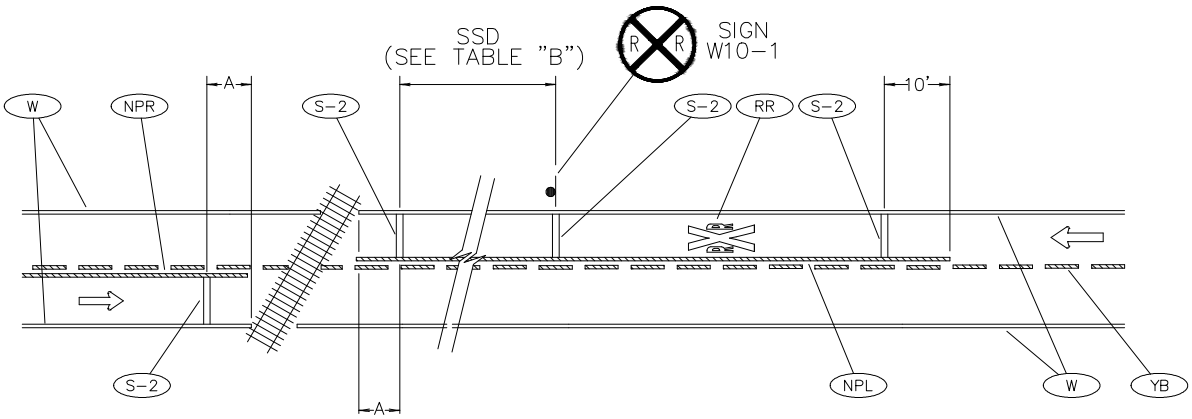

TABLE "B"	
POSTED SPEED (MPH)	SAFE STOPPING DISTANCE SSD (FT)
10	50 (100 STD.)
15	80 (100 STD.)
20	115
25	155
30	200
35	250
40	305
45	360
50	425
55	495
60	570
65	645

A = 12' MIN. FROM NEAREST RAIL OR 1' IN ADVANCE OF THE LOCATION WHERE AN AUTOMATIC GATE ARM CROSSES THE ROADWAY. INSTALL STOP BAR PERPENDICULAR TO ROADWAY.

NOTES:
1. START AND END ALL LONGITUDINAL LINES WITHIN 2 FT. OF THE NEAREST RAIL

TYPICAL RAILROAD GRADE CROSSING MARKINGS
(SEE OAR CHAPTER 741-110 FOR DETAILS)

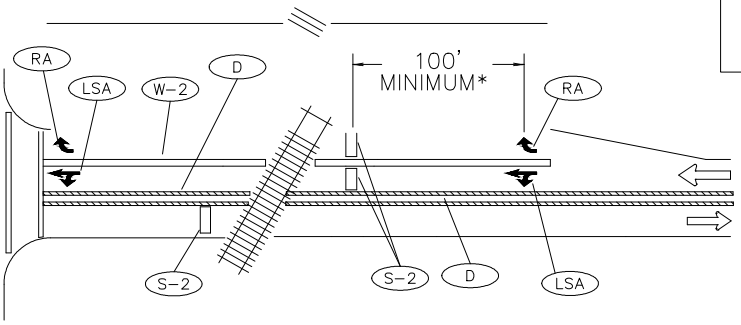

LANE USE ARROW MARKINGS APPROACHING RAILROAD GRADE CROSSING AT INTERSECTIONS WITH MULTI-LANES

THIS SHEET TO BE ACCOMPANIED BY STD. DRAWING NOS. 517 THRU 520

CITY OF MILWAUKIE, OREGON – PUBLIC WORKS DEPT.

Rail Crossing Pavement Markings

DRAWING NO. 521

APPROVED Gary Parkson 12/12
CITY ENGINEER DATE

NO.	REVISIONS	DATE	BY
1	DRAWING CREATED	10/12	MTC

DEC 2012

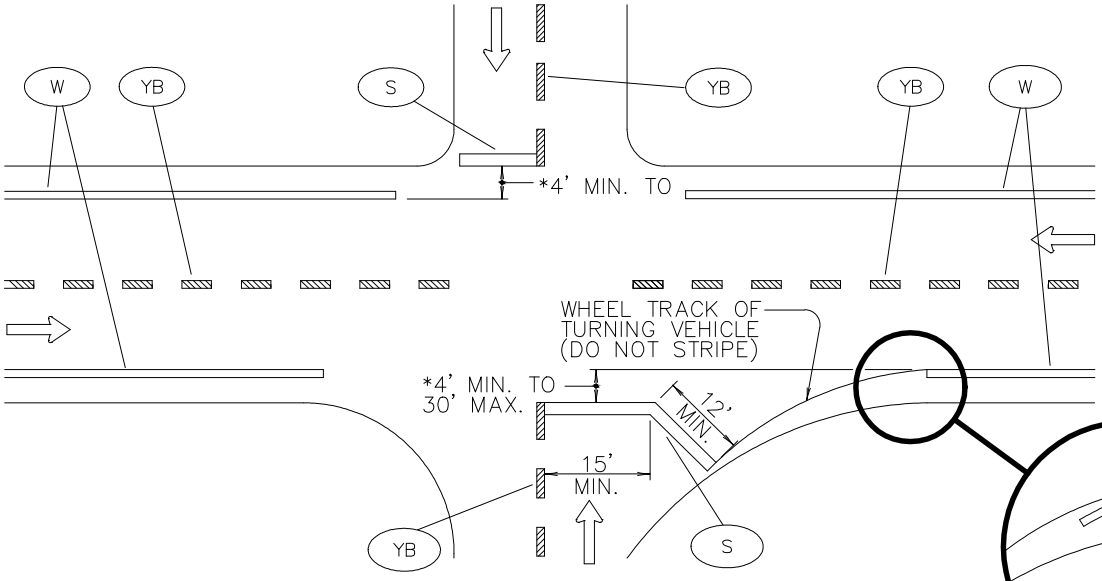

PAVEMENT MARKINGS FOR TYPICAL INTERSECTION

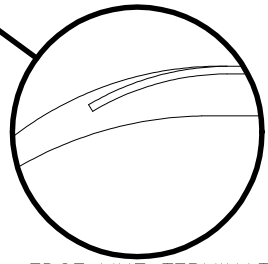

EDGE LINE TERMINATION
IF SHOULDER WIDTH
IS 8' OR MORE

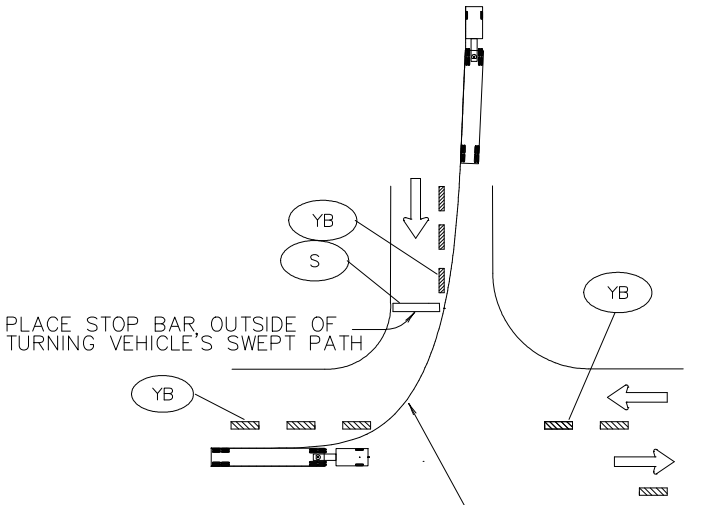

STOP BAR PLACEMENT WITH
RESPECT TO TURN RADII

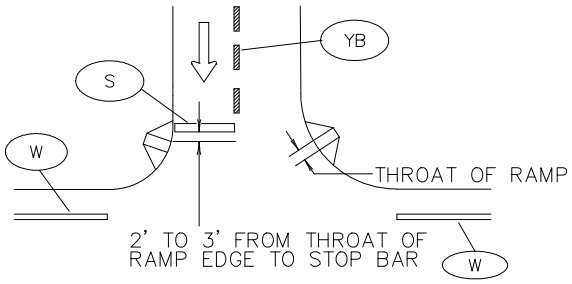

STOP BAR PLACEMENT WITH
RESPECT TO PEDESTRIAN RAMPS

NOTES:

TO BE ACCOMPANIED BY STANDARD DRAWING. NOS. 517 THRU 520

CITY OF MILWAUKIE, OREGON – PUBLIC WORKS DEPT.

Intersection Pavement Markings – Stop Bars

DRAWING NO.

522A

APPROVED Gary Parkson 12/12

CITY ENGINEER DATE

NO.	REVISIONS	DATE	BY
1	DRAWING CREATED	10/12	MTC
2			

DEC 2012

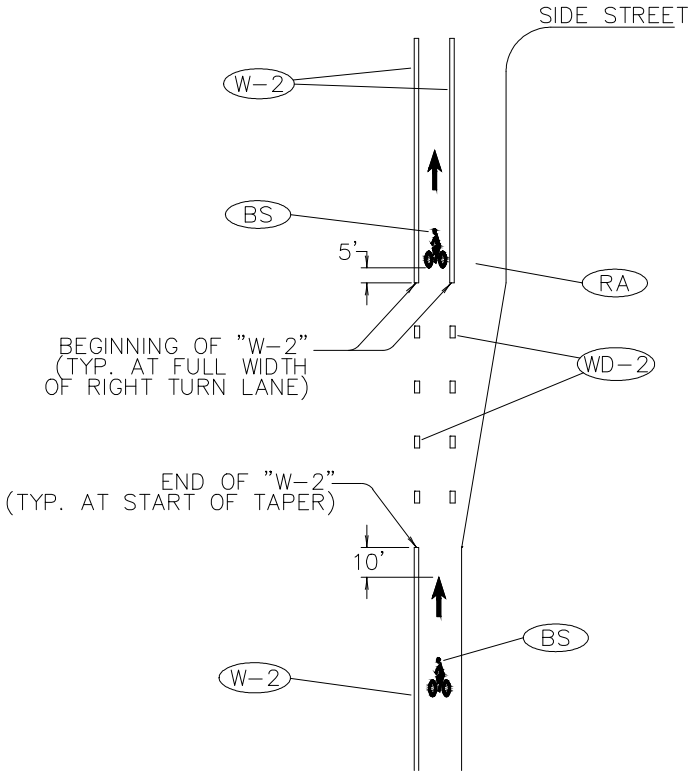

INSTALLATION OF BIKE LANE STENCILS
FOR BIKE LANE SEPARATED BY RIGHT TURN LANE

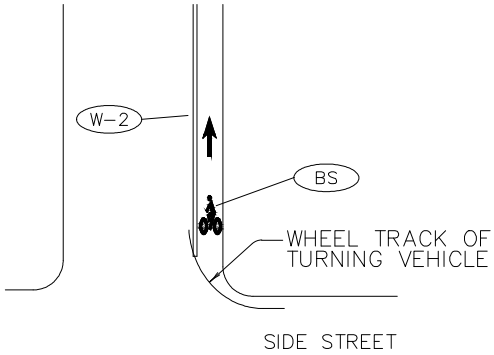

NOTES:

INSTALL BIKE LANE STENCIL TO AVOID RIGHT TURNING VEHICLE WHEEL TRACKS.

INSTALLATION OF BIKE LANE STENCILS
FOLLOWING INTERSECTIONS

TO BE ACCOMPANIED BY STANDARD DRAWING NOS. 517 THRU 520

CITY OF MILWAUKIE, OREGON – PUBLIC WORKS DEPT.

Intersection Pavement Markings – Bike Lanes

DRAWING NO. 522B

APPROVED Gary Pedersen 12/12
CITY ENGINEER DATE

NO.	REVISIONS	DATE	BY
1	DRAWING CREATED	10/12	MTC

DEC 2012

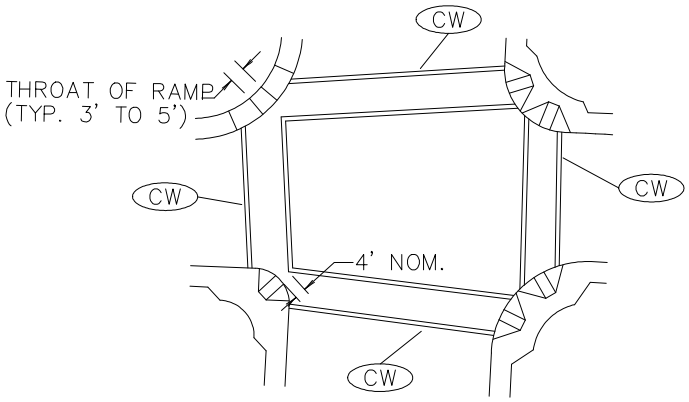

STANDARD CROSSWALK BARS
AT INTERSECTION

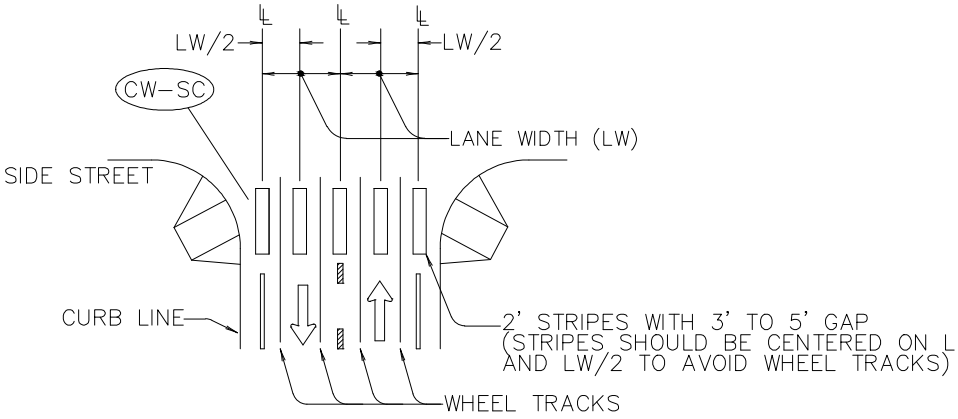

STAGGERED CONTINENTAL
LAYOUT

NOTES:

INSTALL CROSSWALK BARS SUCH THAT THE THROAT OF THE ADA RAMP IS ENTIRELY WITHIN CROSSWALK MARKINGS, OR 5' BACK OF EXTENDED FOG LINE, EDGE OF PAVEMENT, OR CURB FACE.

TO BE ACCOMPANIED BY STANDARD DRAWING NOS. 517 THRU 520

CITY OF MILWAUKIE, OREGON – PUBLIC WORKS DEPT.

Intersection Pavement Markings – Crosswalk

DRAWING NO. 522C

APPROVED Gary Parkin 12/12
CITY ENGINEER DATE

NO.	REVISIONS	DATE	BY
1	DRAWING CREATED	10/12	MTC

DEC 2012

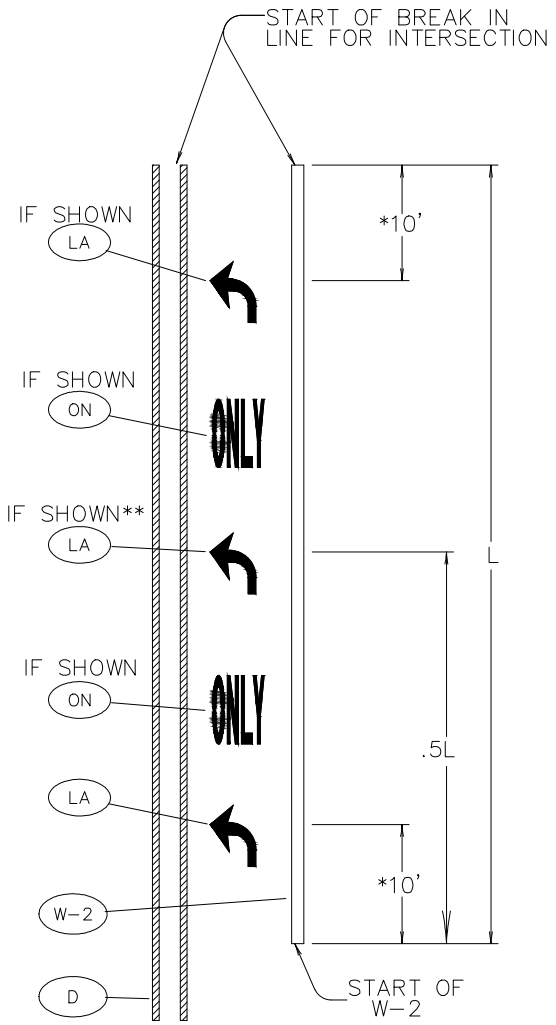

LANE USE ARROW PLACEMENT FOR TURN LANE

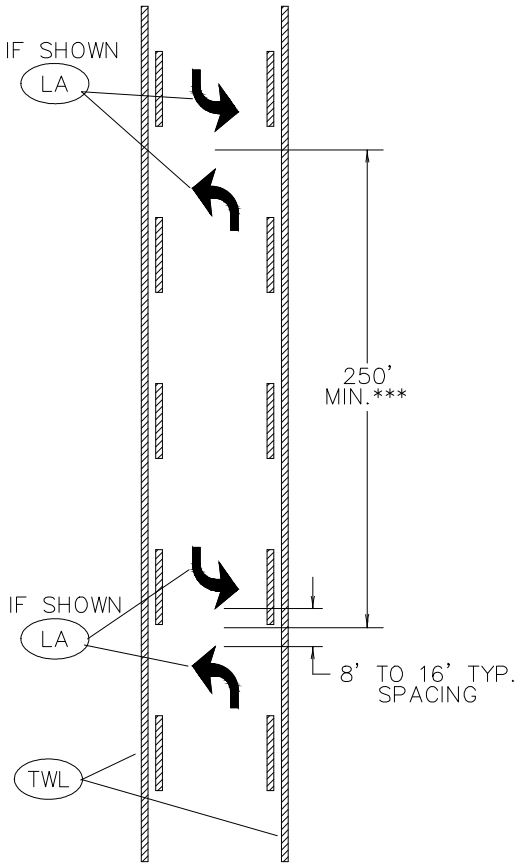

TWO-WAY LEFT TURN LANE ARROW PLACEMENT

NOTES:

1. CENTER PAVEMENT MARKING LEGENDS WITHIN THE LANE.
2. PLACEMENT OF LANE USE ARROWS WITH RESPECT TO THE 8" WIDE WHITE LINE (W-2) CHANNELIZATION APPLIES TO BOTH LEFT AND RIGHT TURN LANES.
3. CENTER "ONLY" MARKINGS BETWEEN LANE USE ARROWS.

* 15' WHEN INSTALLING ELONGATED ARROWS.

** WHEN L IS GREATER THAN 400', INSTALL 3RD LANE USE ARROW AT .5L AS SHOWN.

*** DOUBLE ARROWS TO BE PLACED AT EVEN INTERVALS, PROPORTIONED WITHIN BLOCK OR

TO BE ACCOMPANIED BY STANDARD DRAWING NOS. 517 THRU 520

CITY OF MILWAUKIE, OREGON – PUBLIC WORKS DEPT.

Turn Arrow Marking Details

DRAWING NO. 523

APPROVED Gary Parkson 12/12

CITY ENGINEER DATE

NO.	REVISIONS	DATE	BY
1	DRAWING CREATED	10/12	MTC
2			

DEC 2012

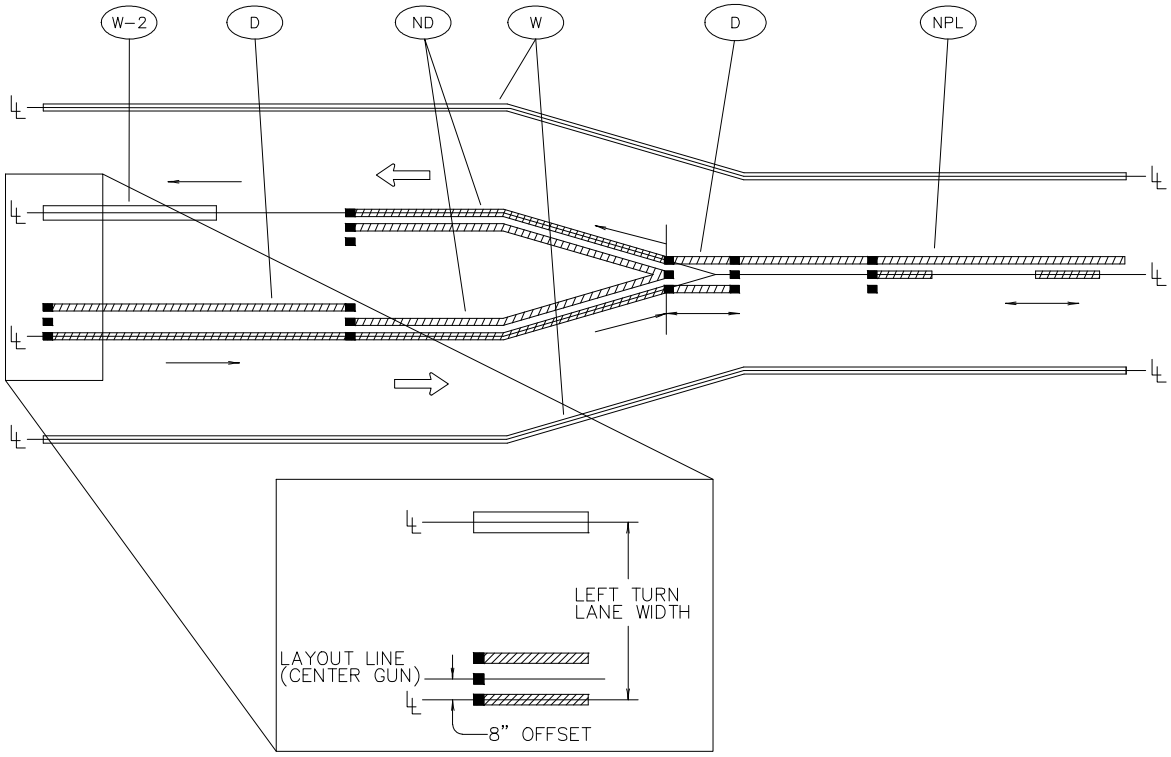

LEFT GUN (#1) MEDIAN/LEFT TURN REFUGE SIDE

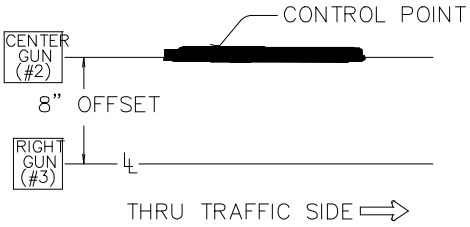

LINE TYPES REQUIRING CONTROL POINTS TO BE 8" OFFSET FROM LANE LINE:

ND*	TWL D	Y
FOR TRAVERSABLE MEDIANS ONLY	FOR LEFT TURN REFUGES ONLY	FOR NON-TRAVERSABLE MEDIANS ON UNDIVIDED HIGHWAYS ONLY. RIGHT GUN (#3) TO BE USED.

8" OFFSET OF LANE LINE AND CENTER GUN

* WHEN ND IS USED AS CENTERLINE MARKINGS, A CONTROL POINT LAYOUT 4" OFFSET FROM THE LANE LINE IS REQUIRED.

LEGEND

- DIRECTION OF TRAVEL AND THRU TRAFFIC SIDE
- LANE LINE DIMENSIONS ARE SHOWN ON THE STRIPING PLANS striping plans.
- DIRECTION OF STRIPING TRUCK (MAY GO EITHER DIRECTION)
- DIRECTION OF STRIPING TRUCK (MAY GO ONE DIRECTION ONLY)
- THREE GUN INSTALLATION SYSTEM (CENTER DOT REPRESENTS CENTER GUN)

NOTES:

1. INSTALL CONTROL POINTS FOR PAVEMENT MARKING ALIGNMENT LAYOUT ALONG THE CENTER GUN LOCATION.
2. INCREASING STATIONING FROM LEFT TO RIGHT

TO BE ACCOMPANIED BY STANDARD DRAWING NOS. 517 THRU 520

CITY OF MILWAUKIE, OREGON – PUBLIC WORKS DEPT.

Alignment Layout – Left Turn Lane

DRAWING NO. 524A

APPROVED Gary Parkin 12/12

CITY ENGINEER DATE

NO.	REVISIONS	DATE	BY
1	DRAWING CREATED	10/12	MTC
2			

DEC 2012

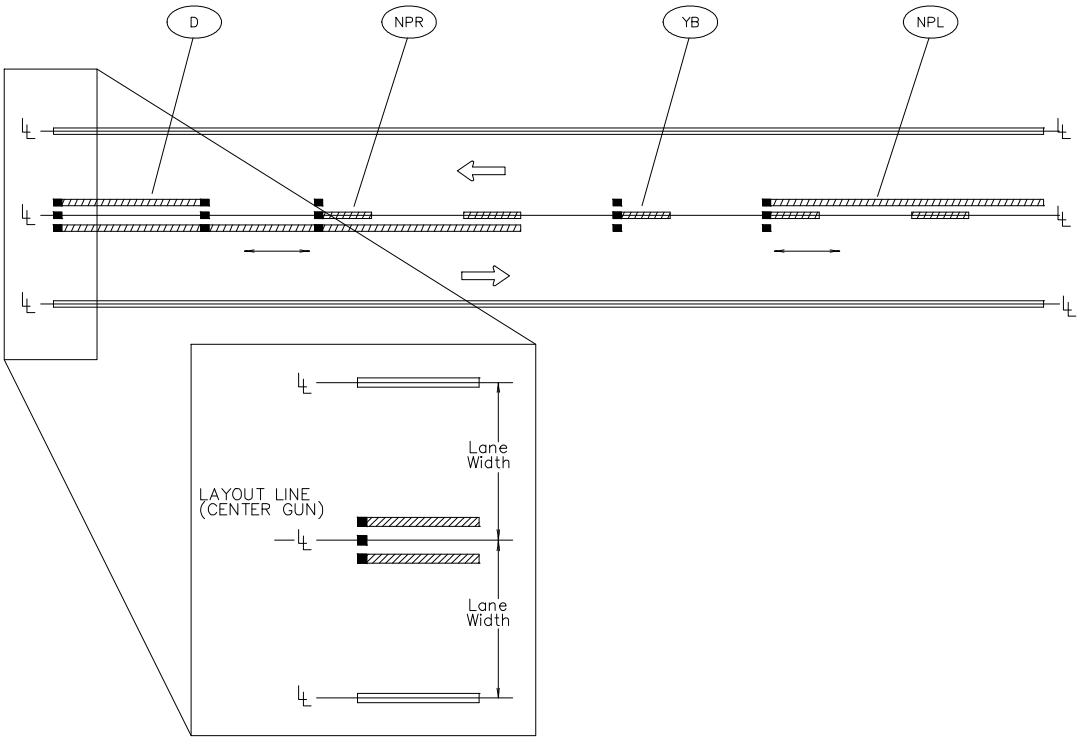

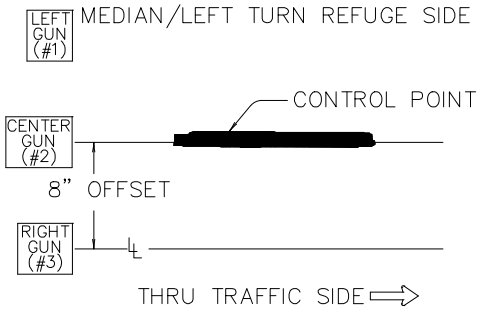

LINE TYPES REQUIRING CONTROL POINTS TO BE 8" OFFSET FROM LANE LINE:

ND *	TWL D	Y
FOR TRAVERSABLE MEDIANS ONLY	FOR LEFT TURN REFUGES ONLY	FOR NON-TRAVERSABLE MEDIANS ON UNDIVIDED HIGHWAYS ONLY. RIGHT GUN (#3) TO BE USED.

8" OFFSET OF LANE LINE AND CENTER GUN

* WHEN ND IS USED AS CENTERLINE MARKINGS, A CONTROL POINT LAYOUT 4" OFFSET FROM THE LANE LINE IS REQUIRED.

L E G E N D

- DIRECTION OF TRAVEL AND THRU TRAFFIC SIDE.
- LANE LINE DIMENSIONS ARE SHOWN ON THE STRIPING PLANS
- DIRECTION OF STRIPING TRUCK (MAY GO EITHER DIRECTION)
- DIRECTION OF STRIPING TRUCK (MAY GO ONE DIRECTION ONLY)
- THREE GUN INSTALLATION SYSTEM (CENTER DOT REPRESENTS CENTER GUN)

Notes:

1. INSTALL CONTROL POINTS FOR PAVEMENT MARKING ALIGNMENT LAYOUT ALONG THE CENTER GUN LOCATION.
2. INCREASING STATIONING FROM LEFT TO RIGHT

TO BE ACCOMPANIED BY STANDARD DRAWING NOS. 517 THRU 520

CITY OF MILWAUKIE, OREGON – PUBLIC WORKS DEPT.

Alignment Layout – Centerline

DRAWING NO. 524B

APPROVED Gary Parkison 12/12

CITY ENGINEER DATE

NO.	REVISIONS	DATE	BY
1	DRAWING CREATED	10/12	MTC

DEC 2012

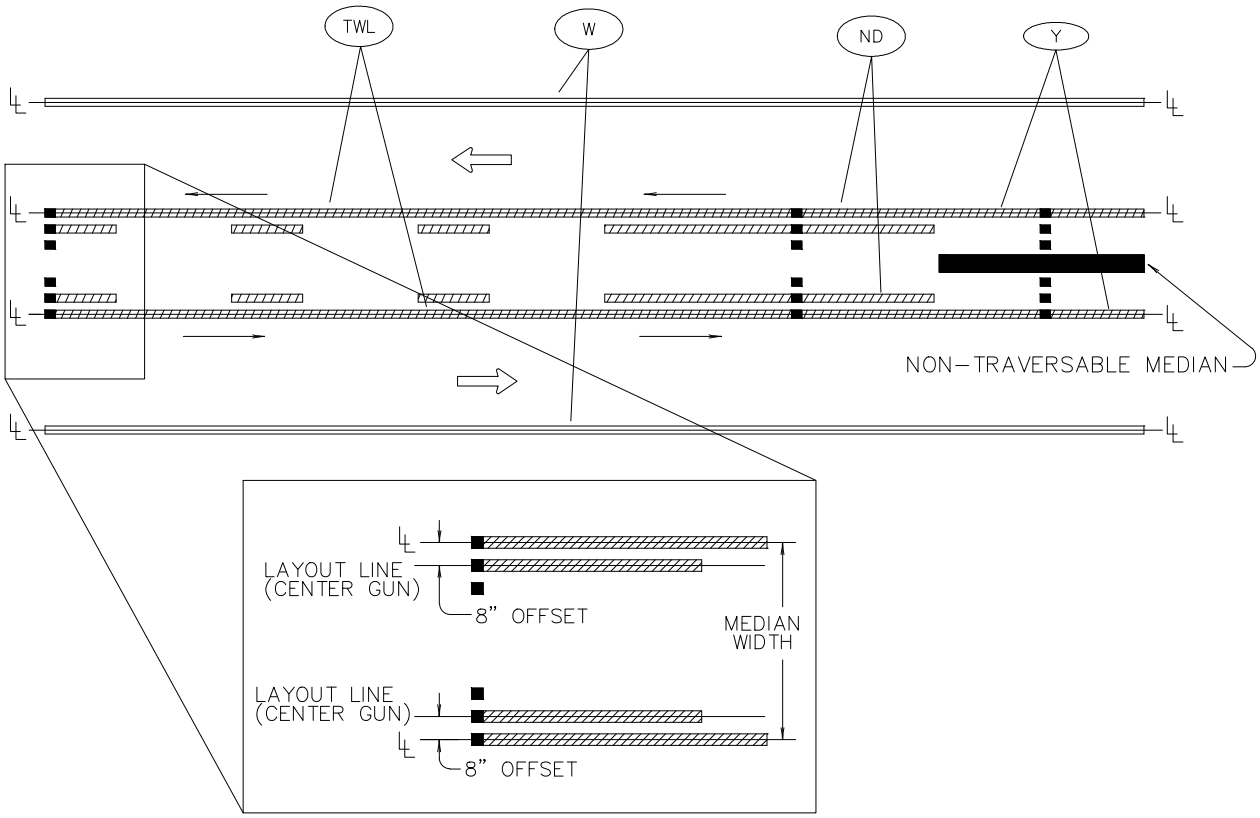

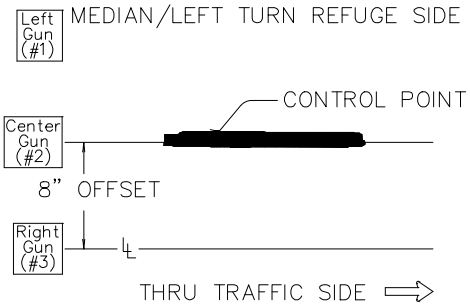

LINE TYPES REQUIRING CONTROL POINTS TO BE 8" OFFSET FROM LANE LINE:

TWL

ND*	D	Y
FOR TRAVERSABLE MEDIANS ONLY	FOR LEFT TURN REFUGES ONLY	FOR NON-TRAVERSABLE MEDIANS ON UNDIVIDED HIGHWAYS ONLY. RIGHT GUN (#3) TO BE USED.

8" OFFSET OF LANE LINE AND CENTER GUN

* WHEN ND IS USED AS CENTERLINE MARKINGS, A CONTROL POINT LAYOUT 4" OFFSET FROM

LEGEND

- DIRECTION OF TRAVEL AND THRU TRAFFIC SIDE.
- LANE LINE DIMENSIONS ARE SHOWN ON THE STRIPING PLANS.
- DIRECTION OF STRIPING TRUCK (MAY GO EITHER DIRECTION)
- DIRECTION OF STRIPING TRUCK (MAY GO ONE DIRECTION ONLY)
- THREE GUN INSTALLATION SYSTEM (CENTER DOT REPRESENTS CENTER GUN)

NOTES:

1. INSTALL CONTROL POINTS FOR PAVEMENT MARKING ALIGNMENT LAYOUT ALONG THE CENTER GUN LOCATION.
2. INCREASING STATIONING FROM LEFT TO RIGHT

TO BE ACCOMPANIED BY STANDARD DRAWING NOS. 517 THRU 520

MILWAUKIE, OREGON FOUNDED 1847

CITY OF MILWAUKIE, OREGON – PUBLIC WORKS DEPT.

Alignment Layout – Medians

DRAWING NO. 524C

APPROVED Gary Parkison 12/12

CITY ENGINEER DATE

NO.	REVISIONS	DATE	BY
1	DRAWING CREATED	10/12	MTC
2			

DEC 2012

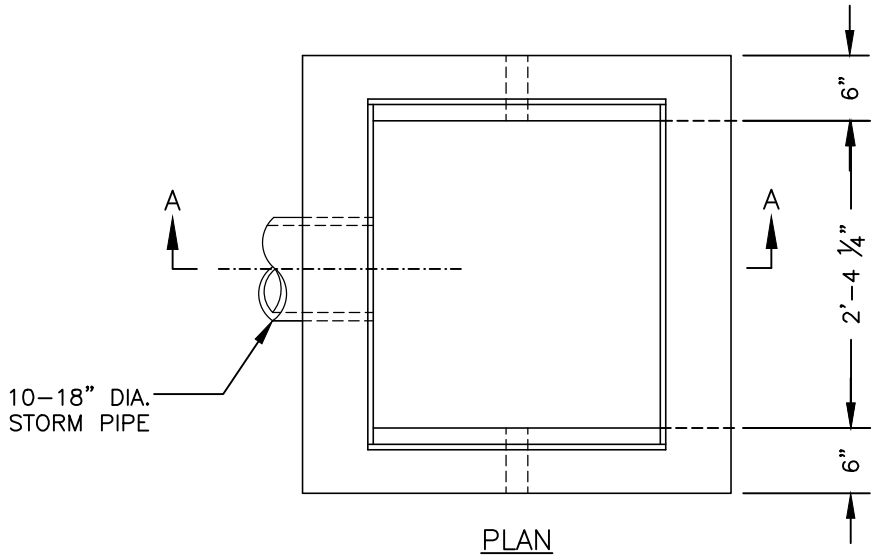

PLAN

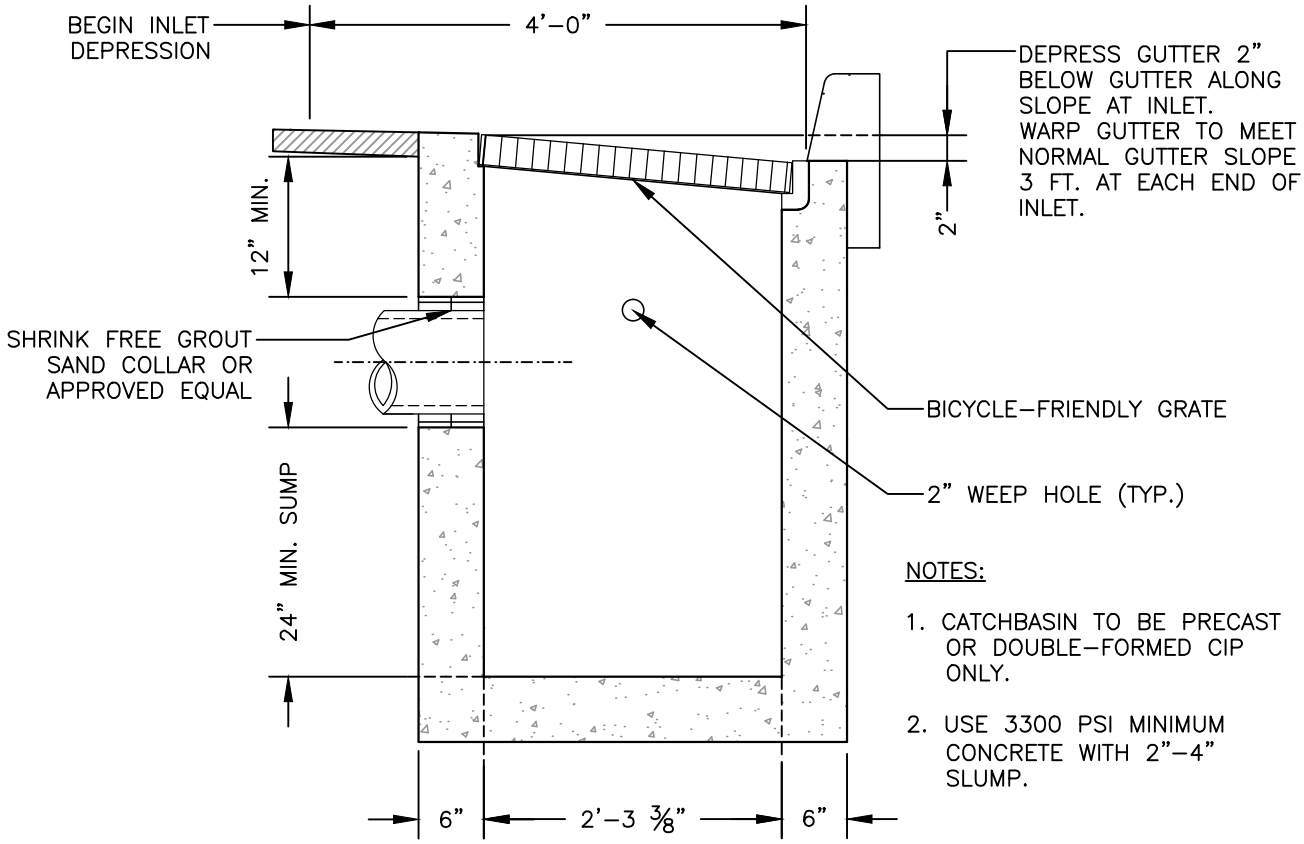

NOTES:

1. CATCHBASIN TO BE PRECAST OR DOUBLE-FORMED CIP ONLY.
2. USE 3300 PSI MINIMUM CONCRETE WITH 2"-4" SLUMP.

SECTION A-A

CITY OF MILWAUKIE, OREGON - PUBLIC WORKS DEPT.

G-2 Catchbasin

DRAWING NO. 600

APPROVED Gary Parkin 12/12

CITY ENGINEER DATE

NO.	REVISIONS	DATE	BY
1	ADJUST MIN. PIPE SIZE, FORMATTING	12/10	MCP

DEC 2012

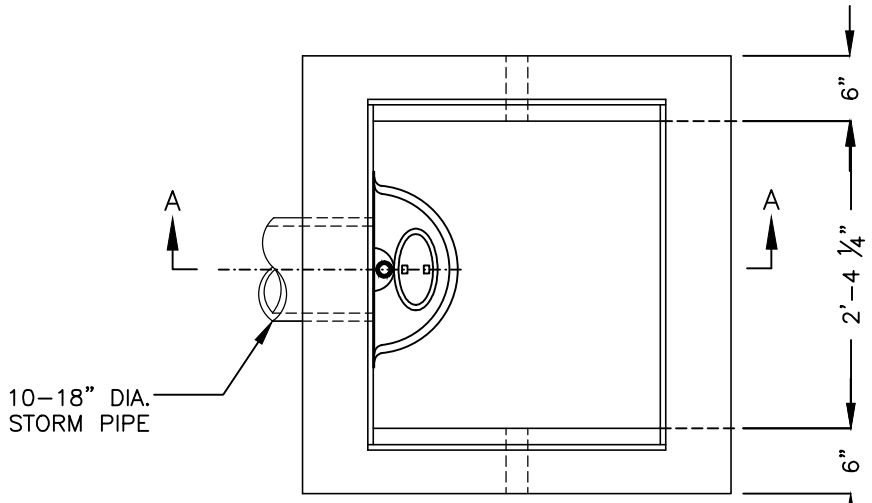

PLAN

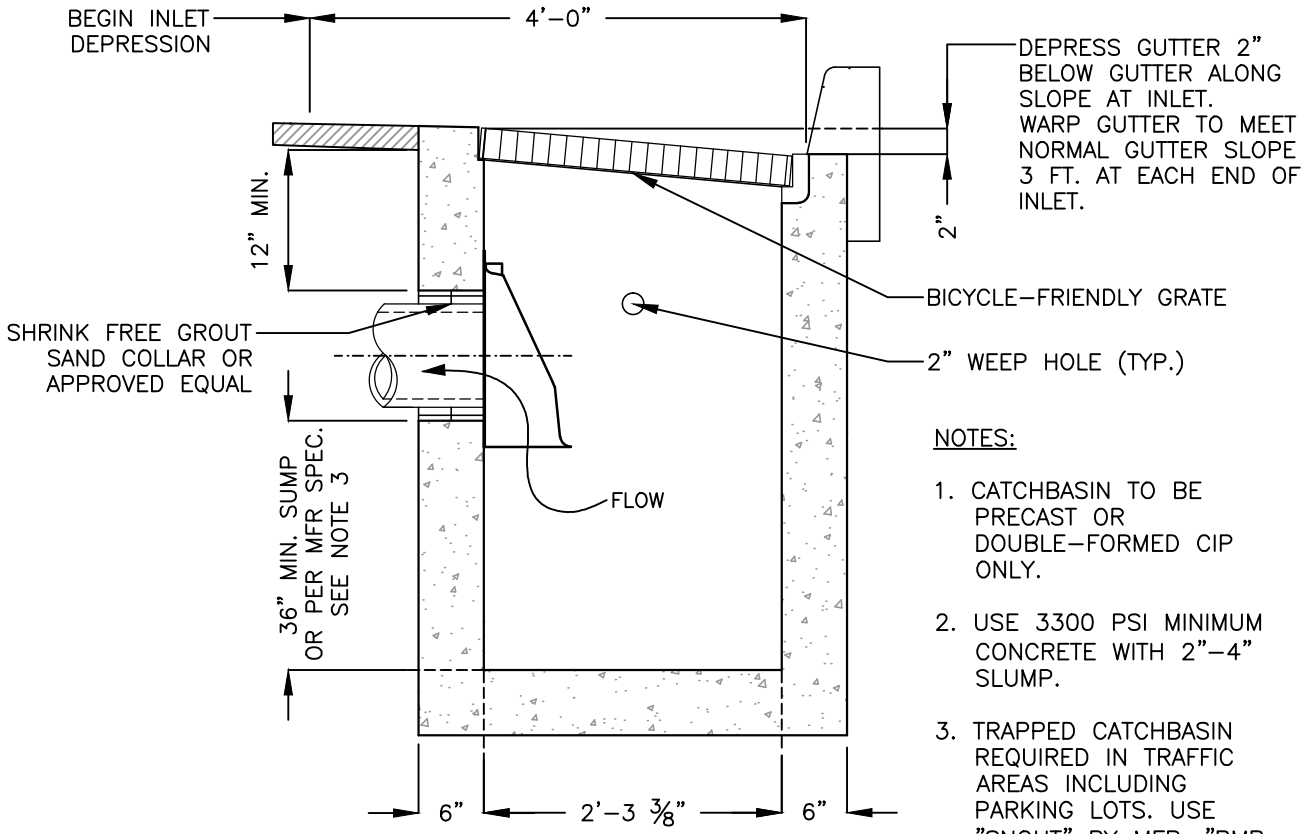

SECTION A-A

NOTES:

1. CATCHBASIN TO BE PRECAST OR DOUBLE-FORMED CIP ONLY.
2. USE 3300 PSI MINIMUM CONCRETE WITH 2"-4" SLUMP.
3. TRAPPED CATCHBASIN REQUIRED IN TRAFFIC AREAS INCLUDING PARKING LOTS. USE "SNOUT" BY MFR. "BMP, INC." OR CITY APPROVED EQUAL.

CITY OF MILWAUKIE, OREGON - PUBLIC WORKS DEPT.

G-2 Trapped Catchbasin - Snout

DRAWING NO. 601

APPROVED Gary Parkin 12/12

CITY ENGINEER DATE

NO.	REVISIONS	DATE	BY
1	ADJUST MIN. PIPE SIZE, FORMATTING	12/10	MCP

DEC 2012

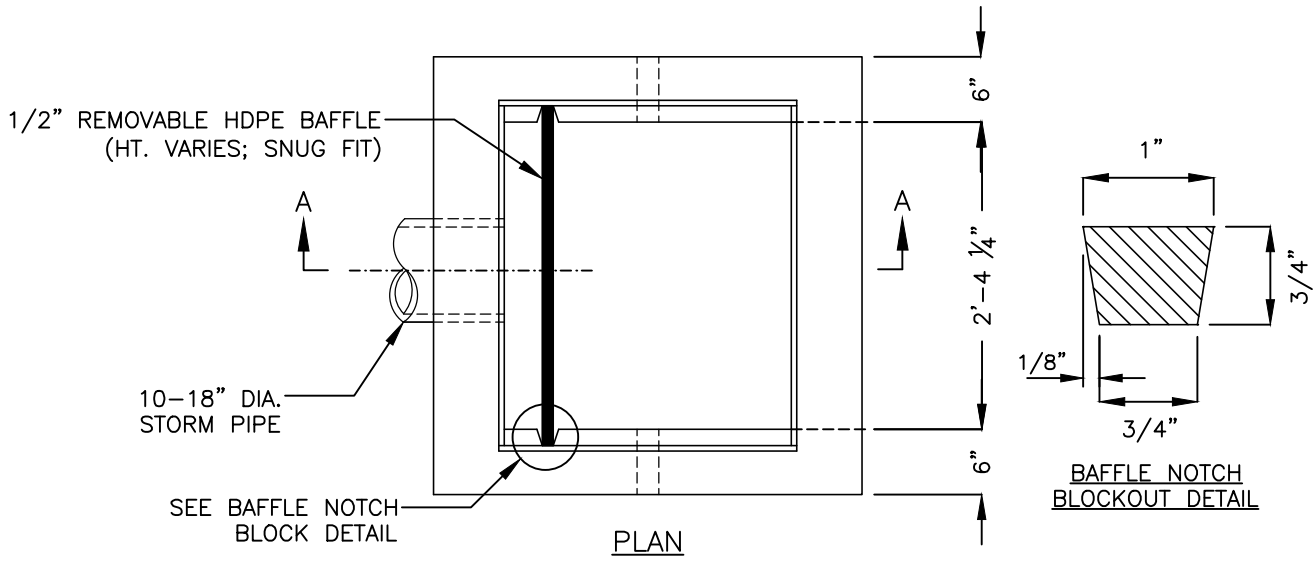

PLAN

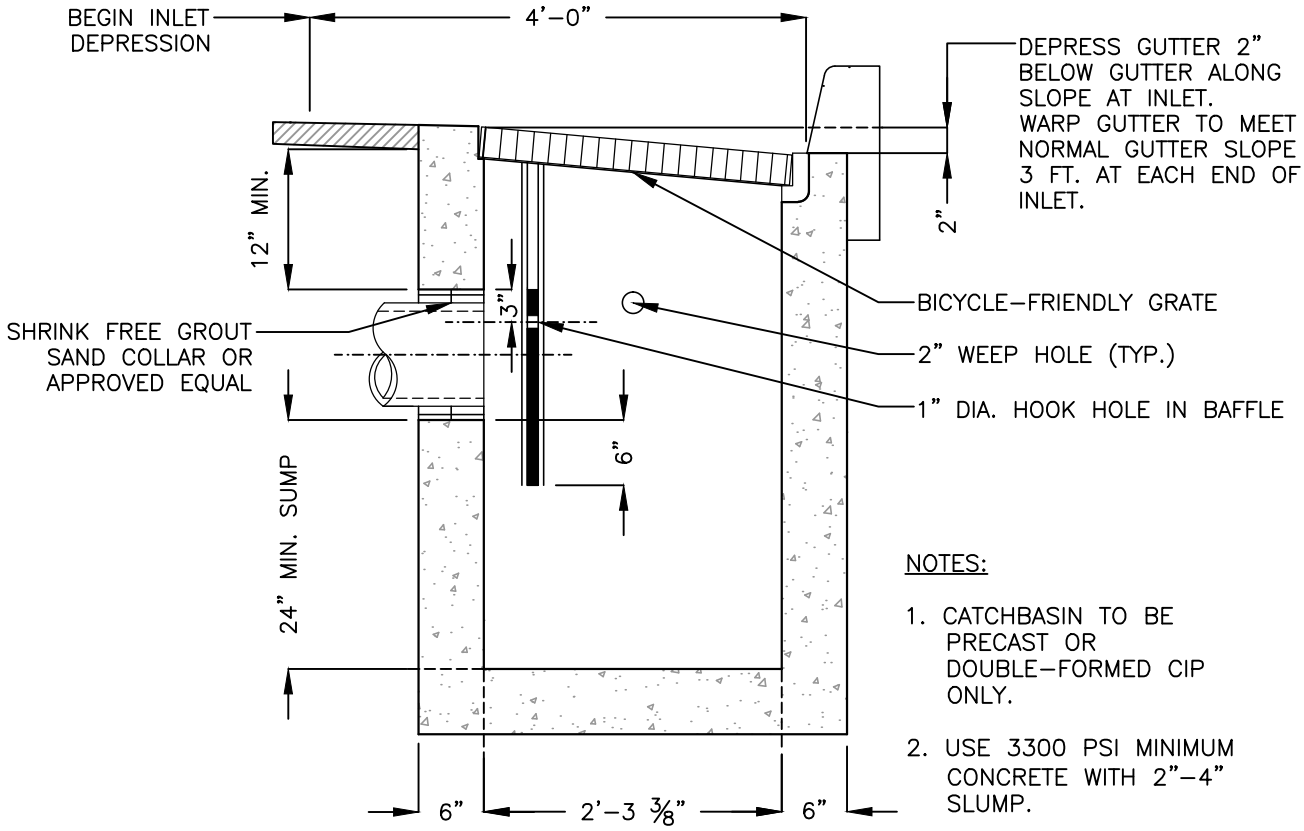

NOTES:

1. CATCHBASIN TO BE PRECAST OR DOUBLE–FORMED CIP ONLY.
2. USE 3300 PSI MINIMUM CONCRETE WITH 2"–4" SLUMP.

SECTION A–A

CITY OF MILWAUKIE, OREGON – PUBLIC WORKS DEPT.

G–2 Trapped Catchbasin – Baffle

DRAWING NO. 602

APPROVED Gary Parkin 12/12

CITY ENGINEER DATE

NO.	REVISIONS	DATE	BY
1	ADJUST MIN. PIPE SIZE, FORMATTING	12/10	MCP

DEC 2012

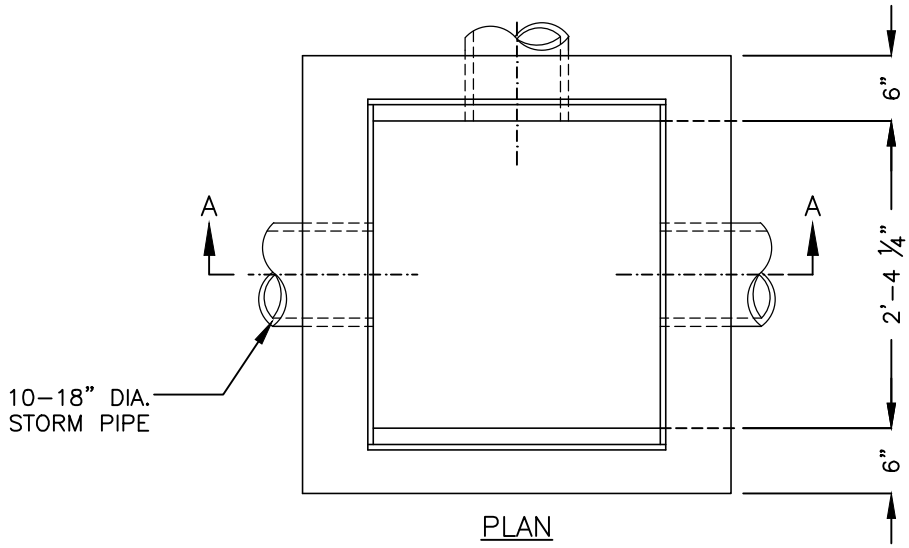

PLAN

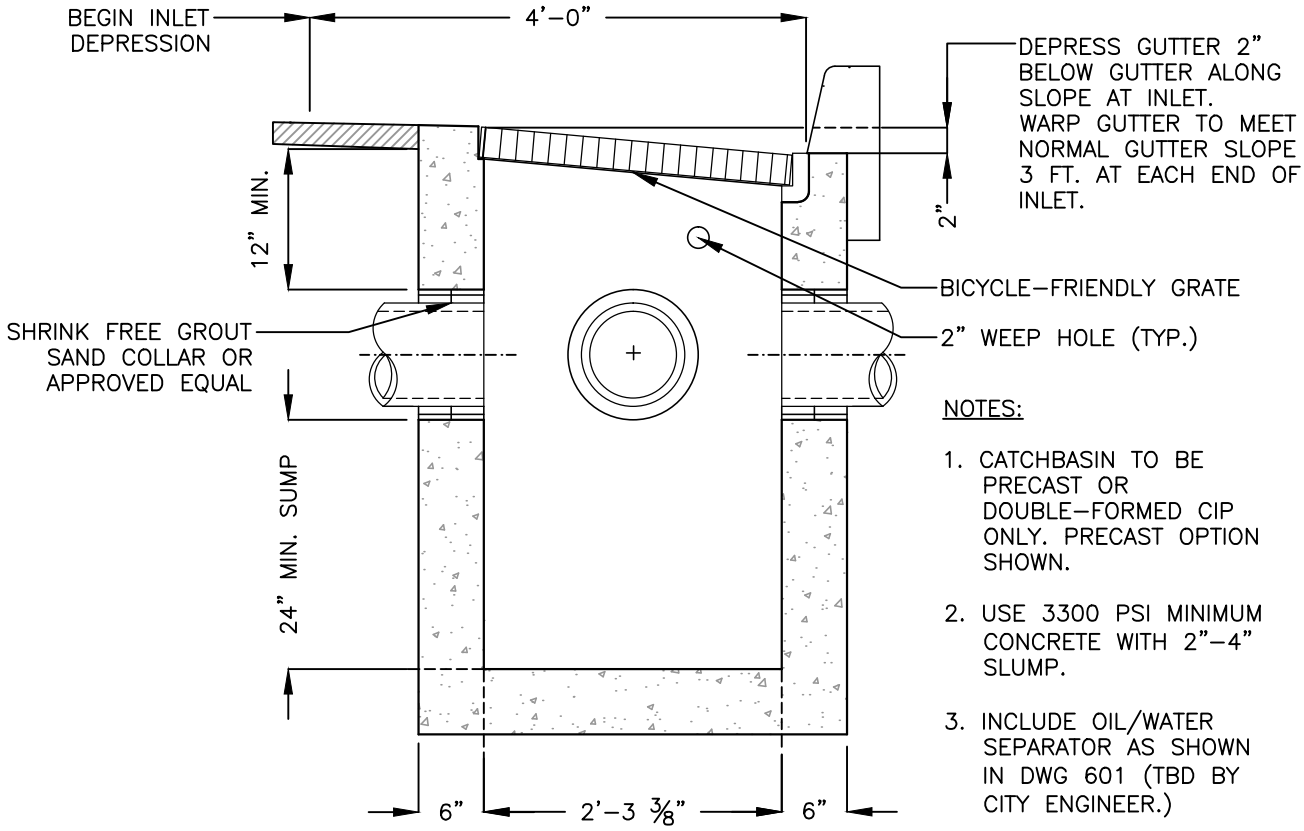

SECTION A-A

NOTES:

1. CATCHBASIN TO BE PRECAST OR DOUBLE-FORMED CIP ONLY. PRECAST OPTION SHOWN.
2. USE 3300 PSI MINIMUM CONCRETE WITH 2"-4" SLUMP.
3. INCLUDE OIL/WATER SEPARATOR AS SHOWN IN DWG 601 (TBD BY CITY ENGINEER.)
4. ACTUAL PIPE LAYOUT TBD AS REQ'D BY SITE CONDITIONS.

CITY OF MILWAUKIE, OREGON - PUBLIC WORKS DEPT.

G-2 Catchbasin Flow Through

DRAWING NO. 603

APPROVED Gary Parkin 12/12

CITY ENGINEER DATE

NO.	REVISIONS	DATE	BY
1	ADJUST MIN. PIPE SIZE, FORMATTING	12/10	MCP

DEC 2012

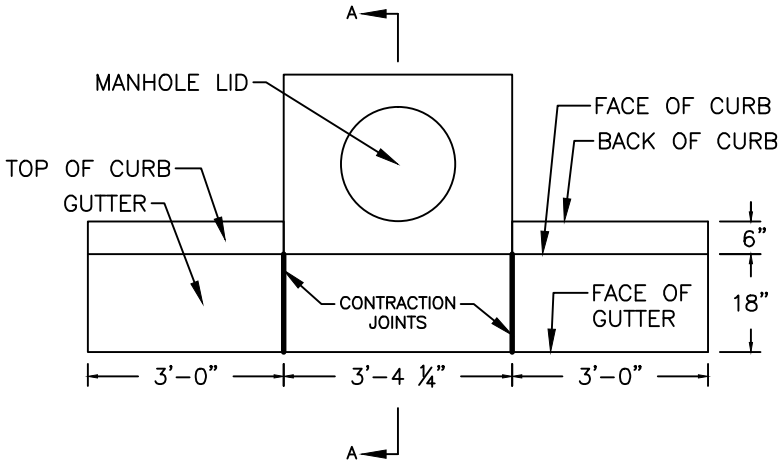

PLAN VIEW

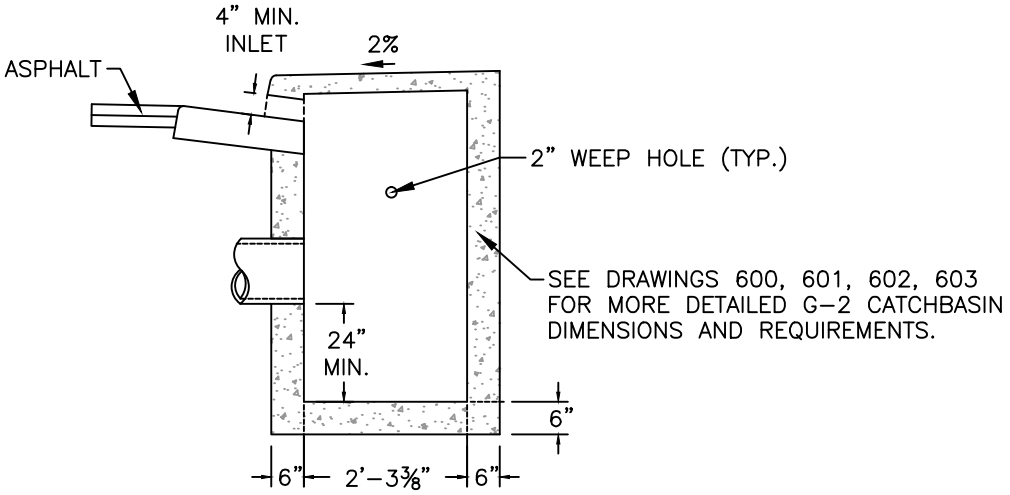

SECTION A-A

NOTES:

1. ALL FABRICATED PARTS SHALL BE HOT-DIPPED GALVANIZED AFTER FABRICATION.
2. STRUCTURE MAY BE PRECAST OR DOUBLE-FORMED POURED IN PLACE ONLY.
3. USE 3300 PSI CONCRETE WITH A 2" TO 4" SLUMP.

CITY OF MILWAUKIE, OREGON – PUBLIC WORKS DEPT.

Curb Inlet Catchbasin – Sidewalk

DRAWING NO. **604A**

APPROVED Gary Parkin 12/12

CITY ENGINEER DATE

NO.	REVISIONS	DATE	BY
1	CHANGED SQ. LID TO MH, SUMP WAS 12"	12/09	BR
2	RECREATED DRAWING, MATCH G-2 DIMS.	12/10	MCP

DEC 2012

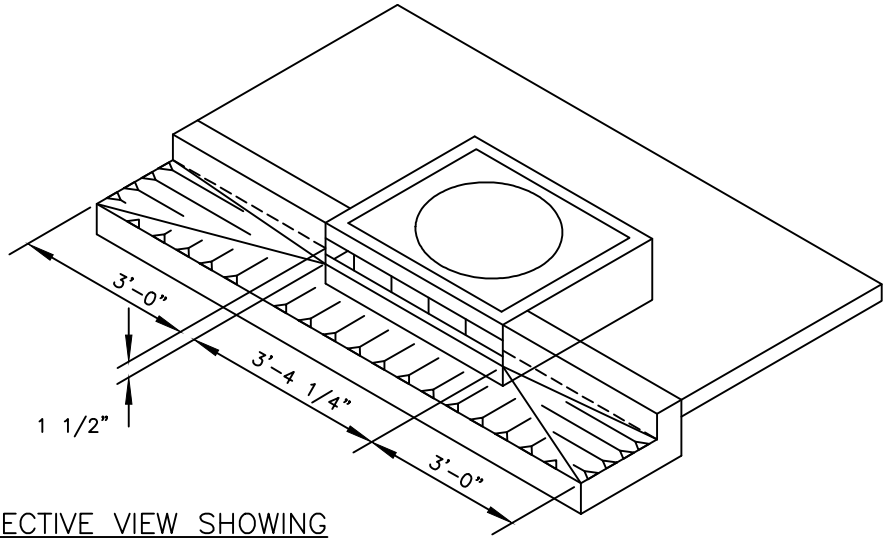

PERSPECTIVE VIEW SHOWING
DEPRESSED GUTTER AT CURB INLET

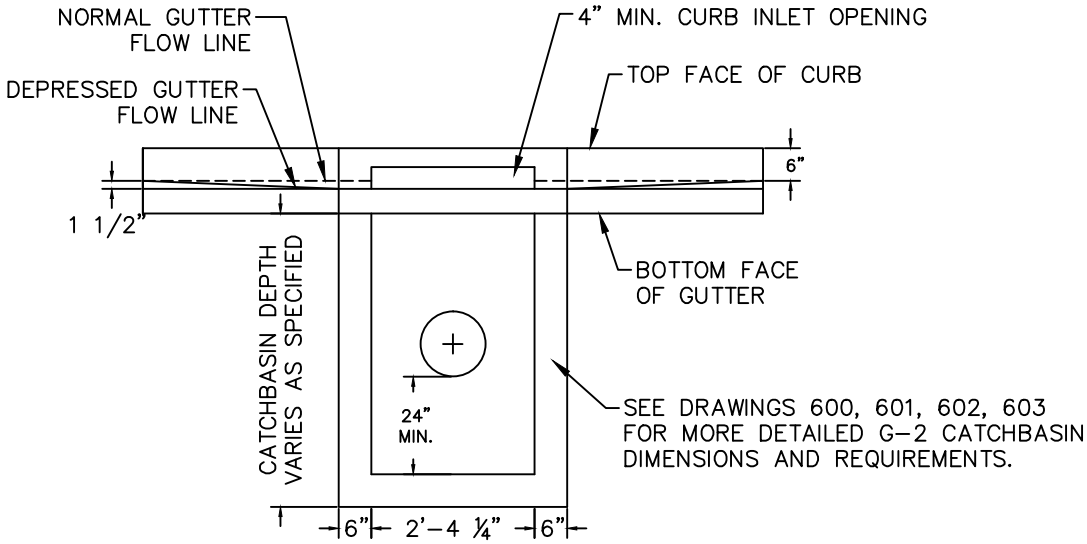

FRONT VIEW

NOTES:

1. ALL FABRICATED PARTS SHALL BE HOT-DIPPED GALVANIZED AFTER FABRICATION.
2. STRUCTURE MAY BE PRECAST OR DOUBLE-FORMED POURED IN PLACE ONLY.
3. USE 3300 PSI CONCRETE WITH A 2" TO 4" SLUMP.

CITY OF MILWAUKIE, OREGON – PUBLIC WORKS DEPT.

Curb Inlet Catchbasin – Sidewalk

DRAWING NO. **604B**

APPROVED Gary Parkin 12/12
CITY ENGINEER DATE

NO.	REVISIONS	DATE	BY
1	CHANGED SQ. LID TO MH, SUMP WAS 12"	12/09	BR
2	RECREATED DRAWING, MATCH G-2 DIMS.	12/10	MCP

DEC 2012

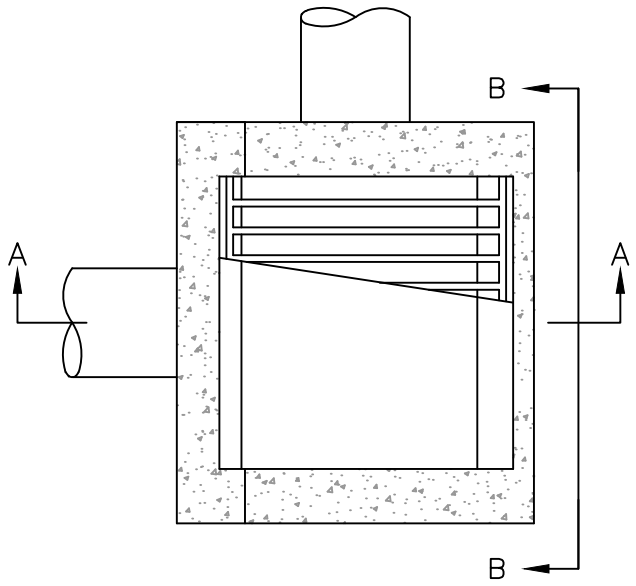

PLAN VIEW

NOTES:

1. USE PRECAST OR DOUBLE–FORMED POURED IN PLACE ONLY.
2. USE 3300 PSI CONCRETE WITH 2" TO 4" SLUMP.
3. FOR FRAME DETAIL, SEE DRAWING NUMBER 606.
4. FOR GRATE DETAIL, SEE DRAWING NUMBER 607.
5. USE SHRINK FREE GROUT, SAND COLLAR, OR OTHER APPROVED CONNECTION.

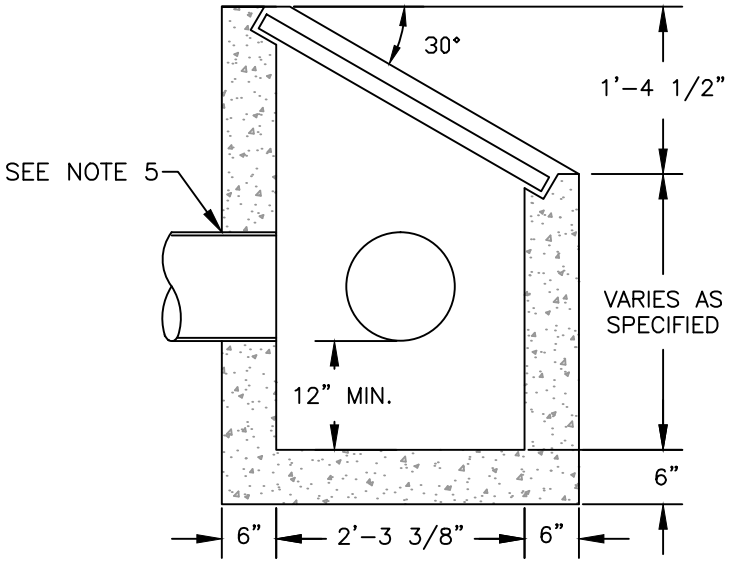

SECTION A–A

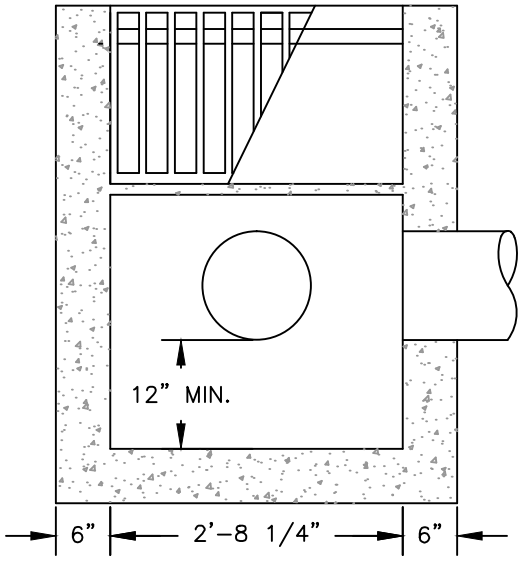

SECTION B–B

CITY OF MILWAUKIE, OREGON – PUBLIC WORKS DEPT.

Catchbasin – Ditch Inlet

DRAWING NO. **605**

APPROVED Gary Parkin 12/12

CITY ENGINEER DATE

NO.	REVISIONS	DATE	BY
1	RECREATED DRAWING, ADDED NOTE 5	12/10	MCP

DEC 2012

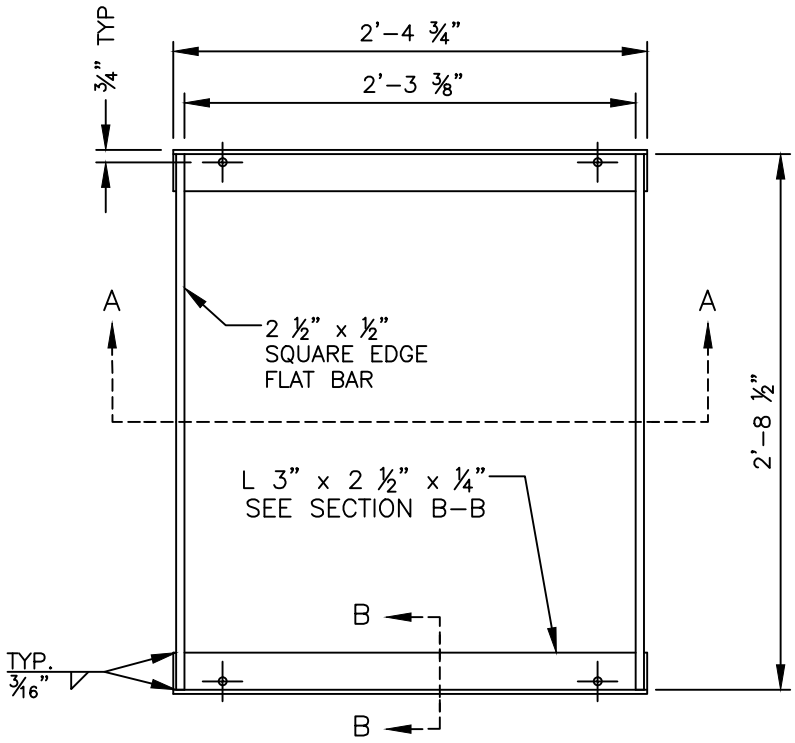

PLAN VIEW

NOTES:

1. USE GRATE SHOWN FOR G-2 CATCHBASINS AND DITCH BOTTOM INLETS.
2. FABRICATE WITH ASTM A36 STEEL.

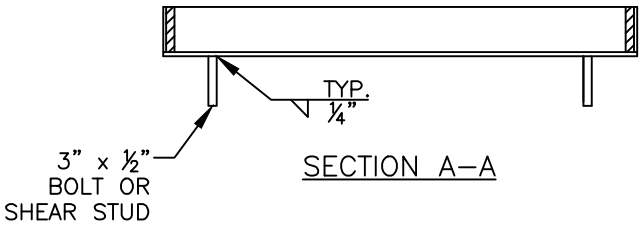

SECTION A-A

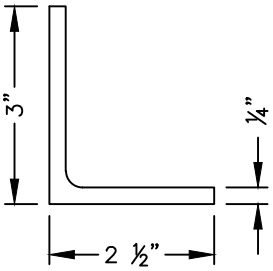

SECTION B-B
ENLARGED SCALE

CITY OF MILWAUKIE, OREGON – PUBLIC WORKS DEPT.

G-2 Catchbasin Frame

DRAWING NO. 606

APPROVED Gary Parkin 12/12
CITY ENGINEER DATE

NO.	REVISIONS	DATE	BY
1	RECREATED DRAWING	12/10	MCP

DEC 2012

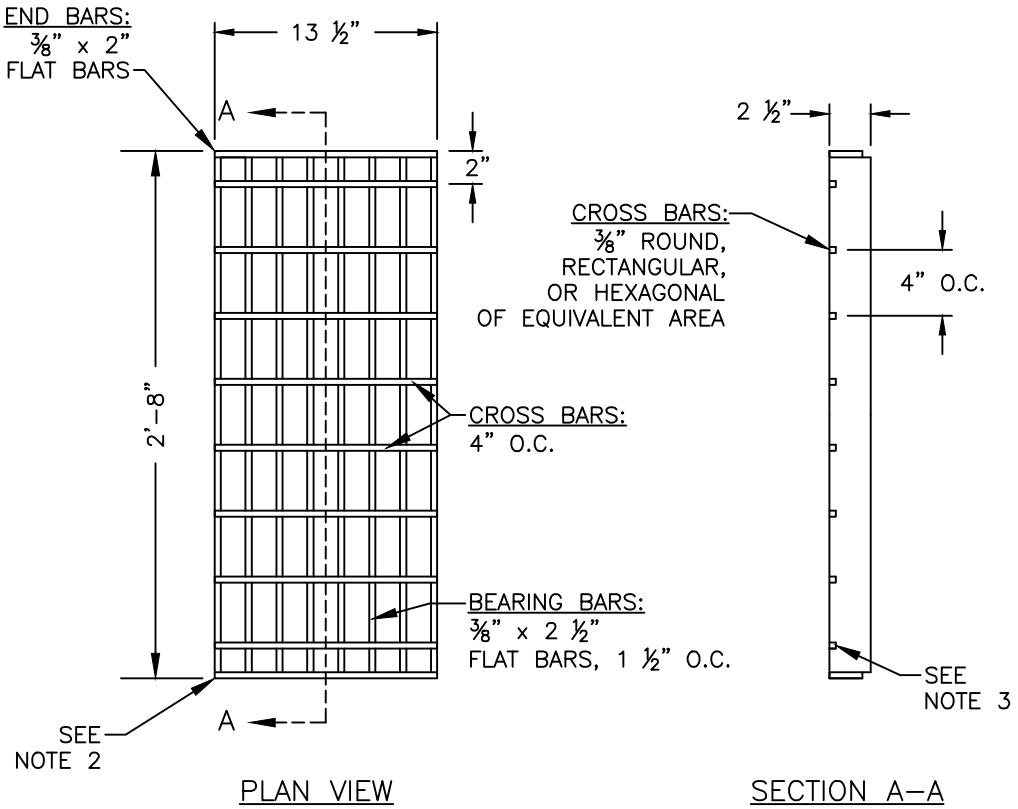

GRATE	SIZE	# OF BARS	TYPE	REMARKS
TYPE 2	1'-1½" x 2'-8"	8	G2	2 GRATES

NOTES:

1. CROSS BARS SHALL BE FLUSH WITH THE GRATE SURFACE.
2. OUTER BEARING BARS AND EVERY THIRD INNER BEARING BAR MUST BE WELDED TO THE END BARS (3/16" TYP.)
3. ALL CROSS BARS MUST BE EITHER FILLET WELDED, RESISTANCE WELDED OR ELECTROFORGED TO THE BEARING BARS (3/16" TYP.)

CITY OF MILWAUKIE, OREGON – PUBLIC WORKS DEPT.

G-2 Catchbasin Grate

DRAWING NO. 607

APPROVED Gary Parkin 12/12

CITY ENGINEER DATE

NO.	REVISIONS	DATE	BY
1	RECREATED DRAWING	12/10	MCP

DEC 2012

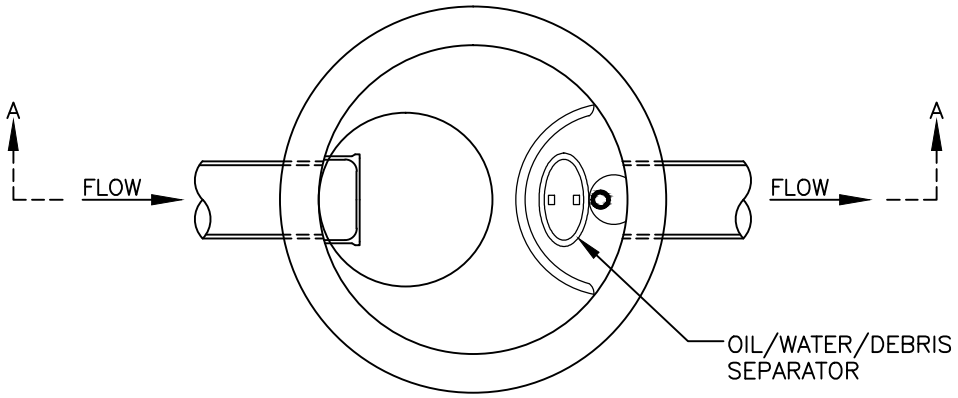

PLAN VIEW

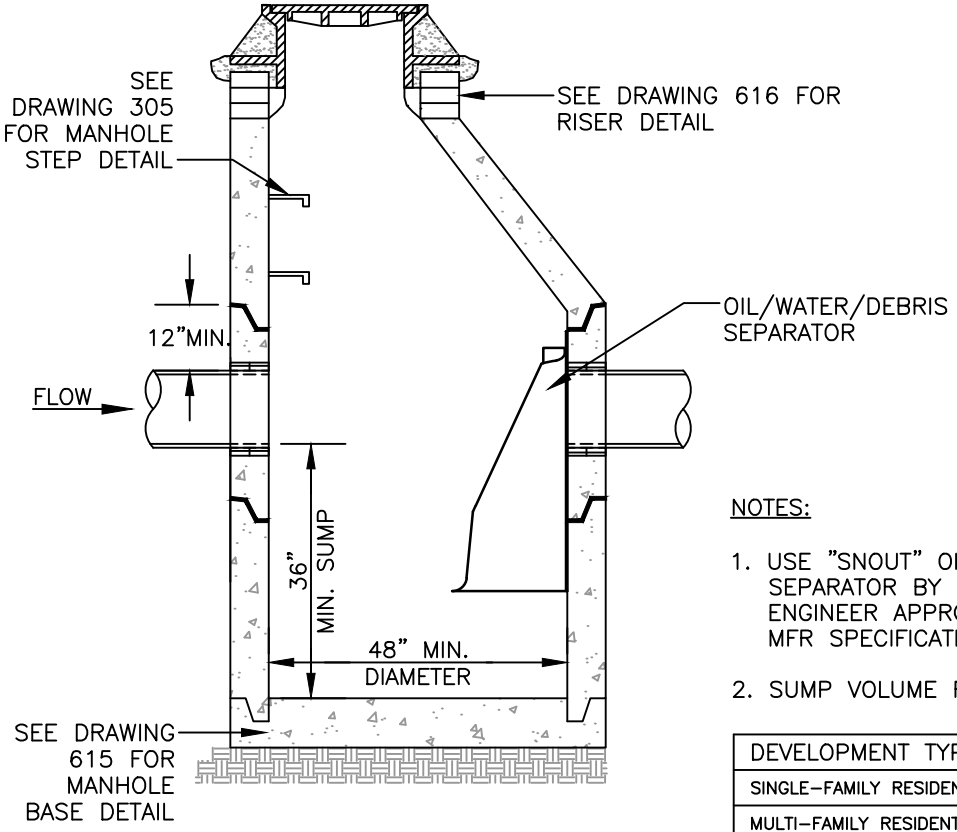

SECTION A–A

NOTES:

1. USE "SNOUT" OIL/WATER/DEBRIS SEPARATOR BY BMP, INC., OR CITY ENGINEER APPROVED EQUIVALENT. FOLLOW MFR SPECIFICATIONS FOR INSTALLATION.

2. SUMP VOLUME REQUIREMENTS:

DEVELOPMENT TYPE	VOLUME REQ'D
SINGLE–FAMILY RESIDENTIAL	3.5 CF/AC
MULTI–FAMILY RESIDENTIAL	22.0 CF/AC
COMMERCIAL/INDUSTRIAL	94.0 CF/AC

CITY OF MILWAUKIE, OREGON – PUBLIC WORKS DEPT.

Pollution Control Manhole w/ Snout

DRAWING NO. 608

APPROVED Gary Parkin 12/12
CITY ENGINEER DATE

NO.	REVISIONS	DATE	BY
1	MANHOLE ACCESS ORIENTATION	03/10	BSA
2	RECREATED DRAWING FOR CLARITY	12/10	MCP

DEC 2012

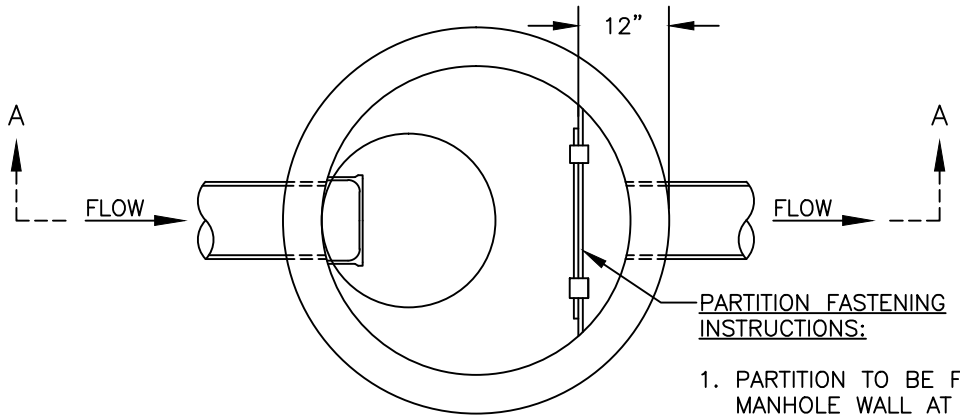

PLAN VIEW

1. PARTITION TO BE FASTENED TO MANHOLE WALL AT THE CORNERS AND 2 FEET O.C. ALONG SIDES; MIN. 3 BRACKETS EACH SIDE.
2. CONCRETE ANCHORS SHALL BE ½" STAINLESS STEEL.
3. INSTALL PARTITION PRIOR TO MANHOLE CONE INSTALLATION.

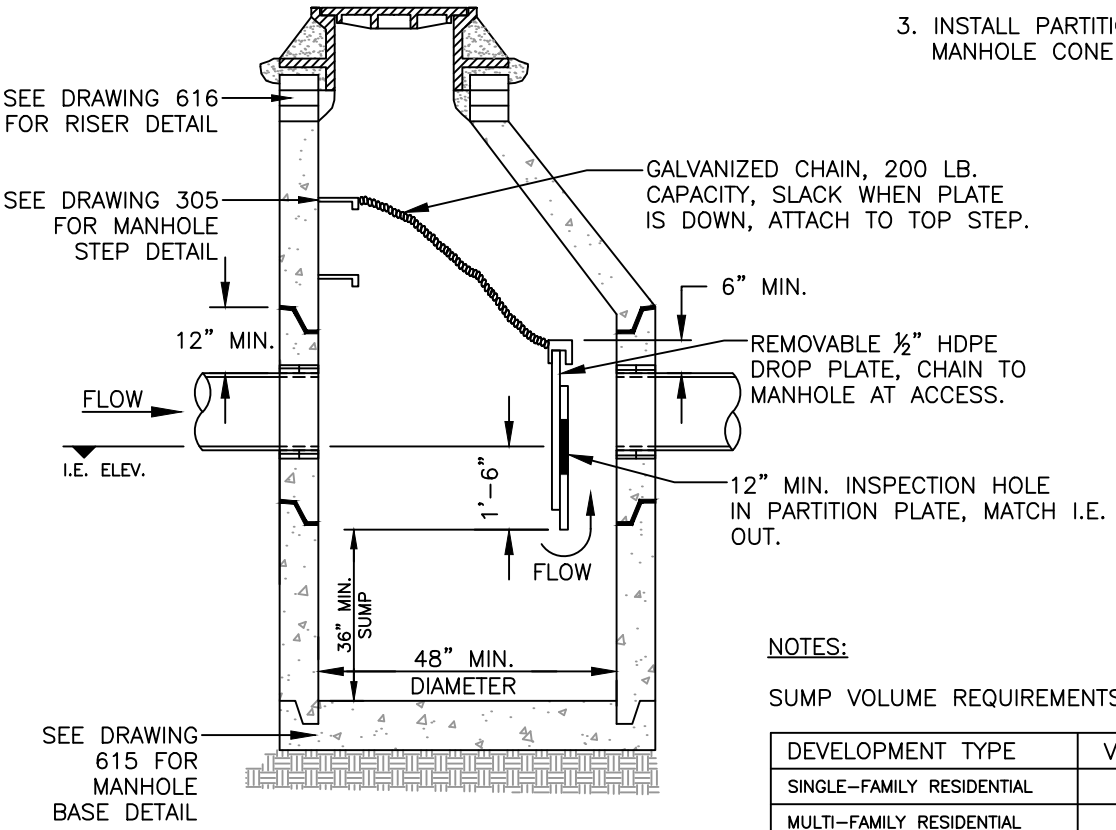

SECTION A–A

NOTES:

SUMP VOLUME REQUIREMENTS:

DEVELOPMENT TYPE	VOLUME REQ'D
SINGLE–FAMILY RESIDENTIAL	3.5 CF/AC
MULTI–FAMILY RESIDENTIAL	22.0 CF/AC
COMMERCIAL/INDUSTRIAL	94.0 CF/AC

CITY OF MILWAUKIE, OREGON – PUBLIC WORKS DEPT.

Pollution Control Manhole w/ Baffle

DRAWING NO. 609

APPROVED Gary Parkin 12/12

CITY ENGINEER DATE

NO.	REVISIONS	DATE	BY
1	MANHOLE ACCESS ORIENTATION	03/10	BSA
2	RECREATED DRAWING FOR CLARITY	12/10	MCP

DEC 2012

PARTITION PLATE

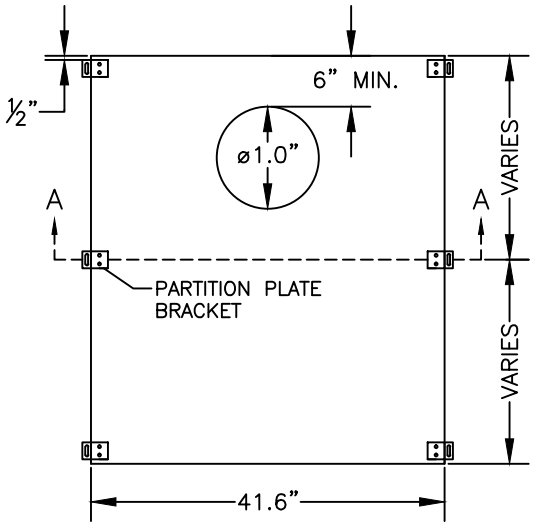

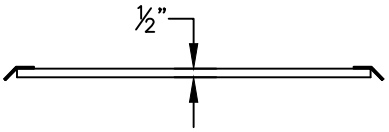

SECTION A–A

DROP PLATE

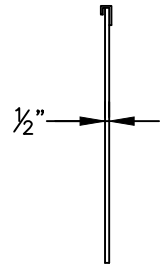

SECTION C–C

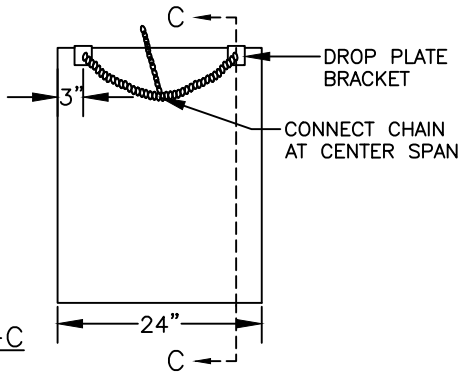

DROP PLATE BRACKET

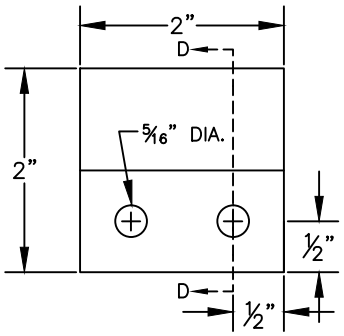

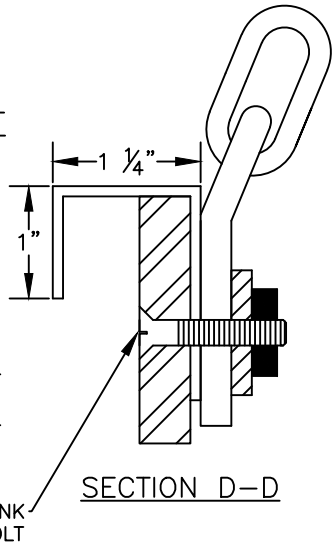

SECTION D–D

PARTITION PLATE BRACKET

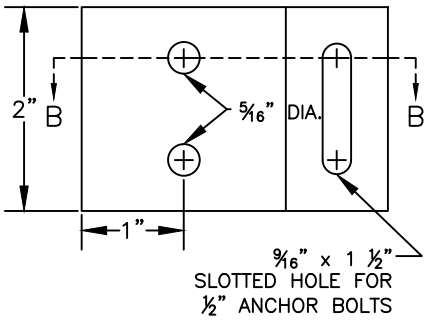

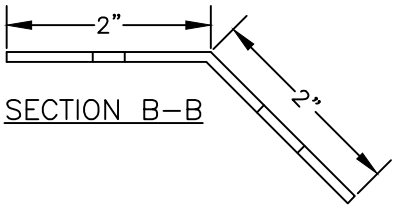

SECTION B–B

NOTES:

1. HARDWARE, FASTENERS, AND ANCHORS TO BE STAINLESS STEEL. CHAIN SHALL BE ⅛" STAINLESS STEEL CABLE.
2. REMOVABLE DROP PLATE AND PARTITION TO BE CONSTRUCTED OF HIGH DENSITY POLYETHLENE (HDPE), ½" THICK ASTM D1248–78 AND INSTALLED PRIOR TO MANHOLE CONE OR TOP INSTALLATION.

CITY OF MILWAUKIE, OREGON – PUBLIC WORKS DEPT.

Baffle Details

DRAWING NO. 610

APPROVED Gary Parkin 12/12
CITY ENGINEER DATE

NO.	REVISIONS	DATE	BY
1	RECREATED DRAWING FOR CLARITY	12/10	MCP

DEC 2012

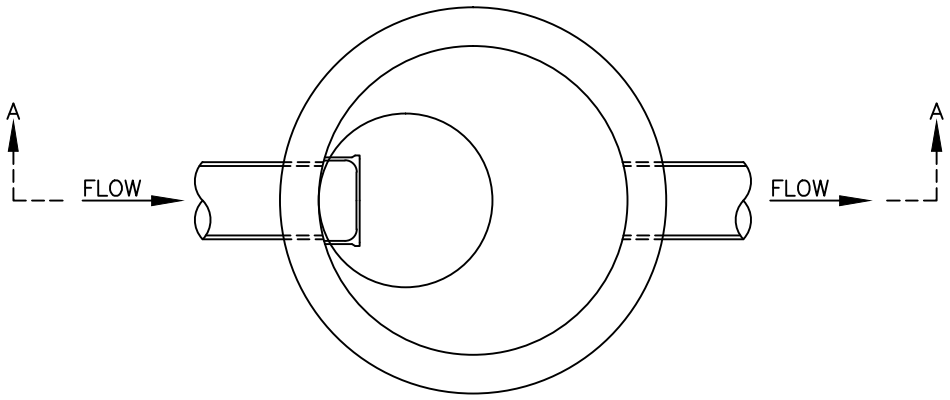

PLAN VIEW

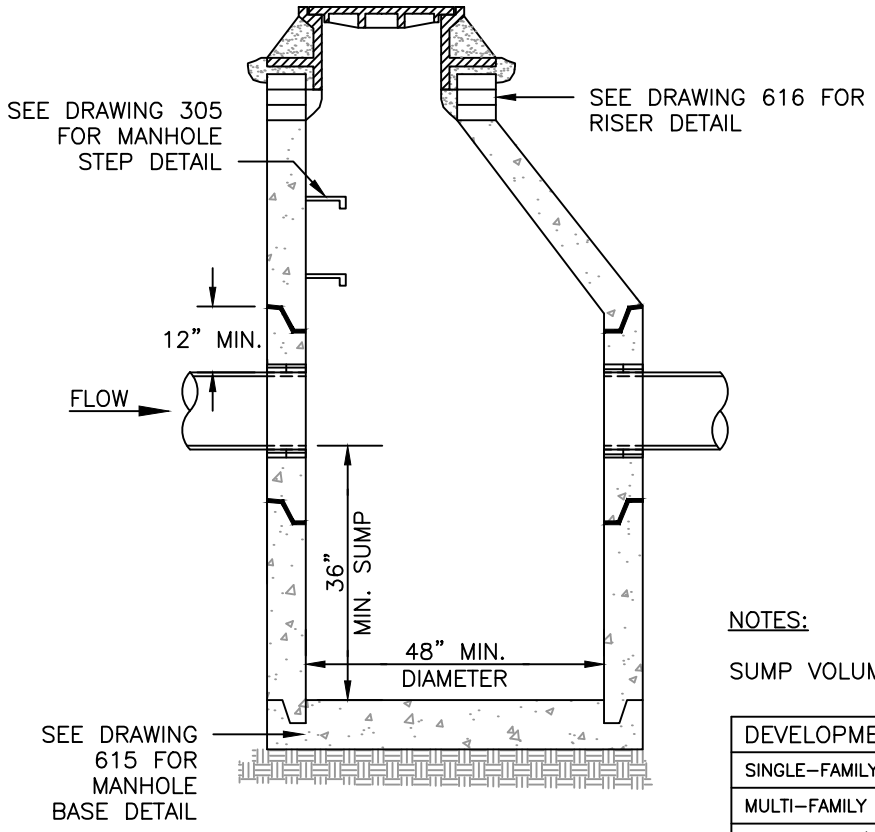

SECTION A–A

NOTES:

SUMP VOLUME REQUIREMENTS:

DEVELOPMENT TYPE	VOLUME REQ'D
SINGLE–FAMILY RESIDENTIAL	3.5 CF/AC
MULTI–FAMILY RESIDENTIAL	22.0 CF/AC
COMMERCIAL/INDUSTRIAL	94.0 CF/AC

CITY OF MILWAUKIE, OREGON – PUBLIC WORKS DEPT.

Sedimentation Manhole

DRAWING NO. 611

APPROVED Gary Parkin 12/12

CITY ENGINEER DATE

NO.	REVISIONS	DATE	BY
1	MANHOLE ACCESS ORIENTATION	03/10	BSA
2	RECREATED DRAWING FOR CLARITY	12/10	MCP

DEC 2012

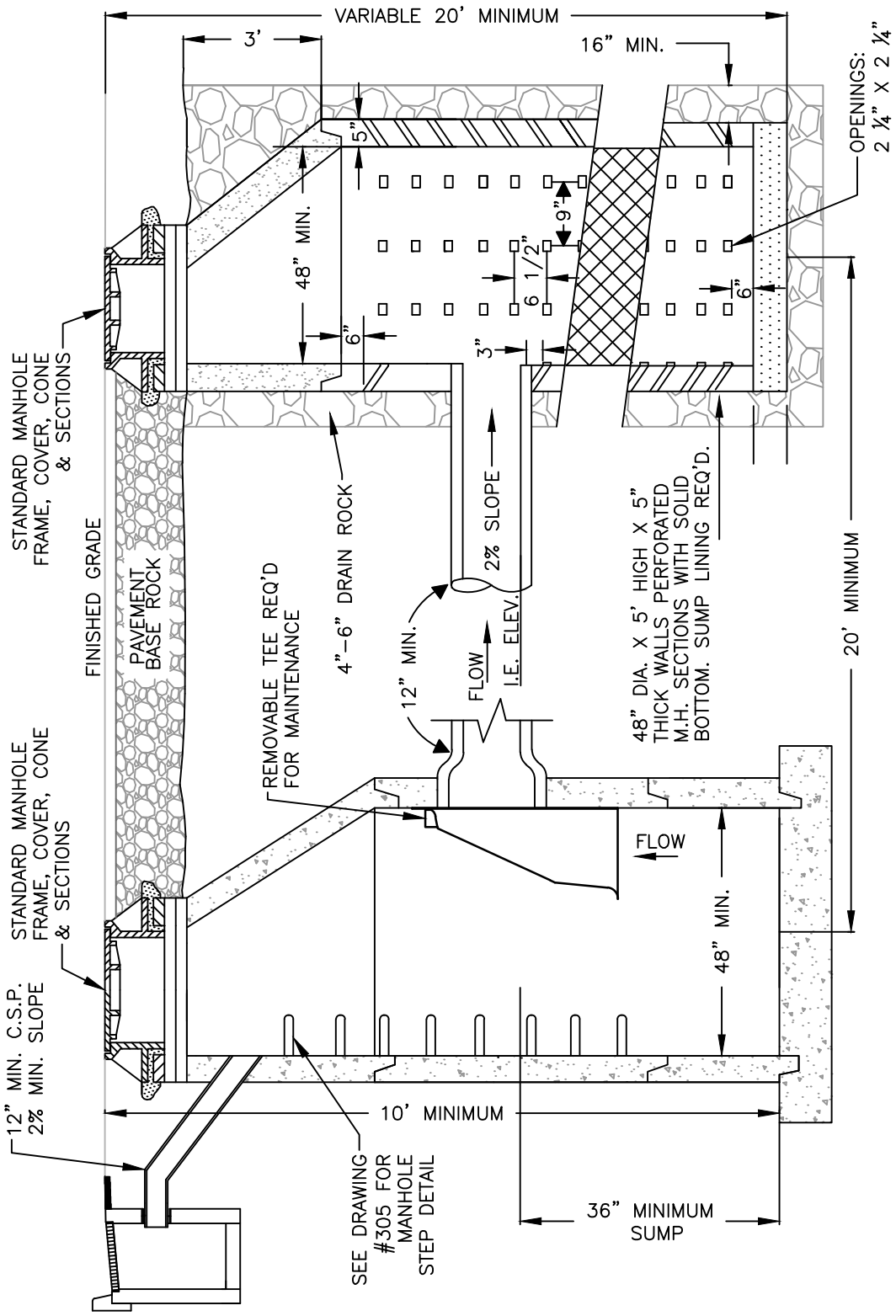

INFILTRATION TESTS BY A QUALIFIED SOILS ENGINEER SHALL VERIFY DEPTH AND SUITABILITY OF SUMP INSTALLATION.

SEE SPECIFICATIONS FOR BEDDING AND PIPE ZONE MATERIAL.

THIS DETAIL REQUIRED FOR DRAINAGE OF IMPERVIOUS SURFACE WITH AREA GREATER THAN 2500 SQ. FT.

CITY OF MILWAUKIE, OREGON – PUBLIC WORKS DEPT.

Sedimentation Manhole Drywell

DRAWING NO. 612

APPROVED Gary Parkin 12/12

CITY ENGINEER DATE

NO.	REVISIONS	DATE	BY
1	MANHOLE ACCESS ORIENTATION	03/10	BSA
2	GENERAL FORMATTING	12/10	MCP
3	REVISED DRAWING	12/12	MTC

DEC 2012

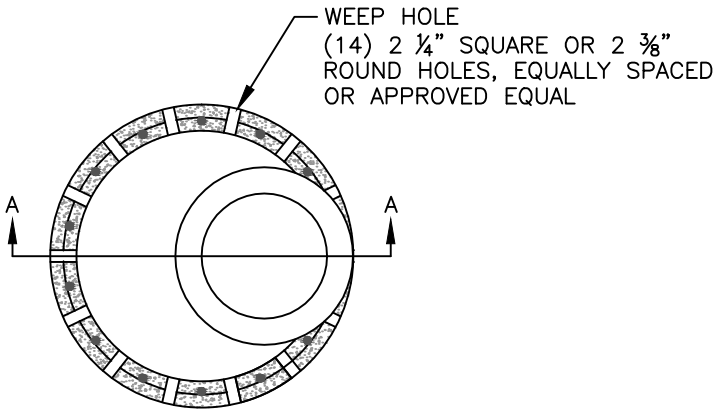

PLAN

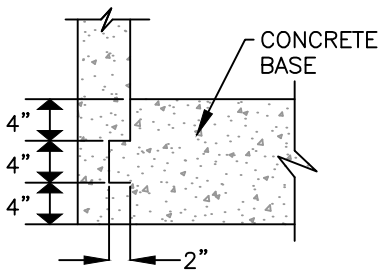

DETAIL "A"

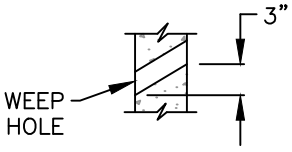

DETAIL "B"

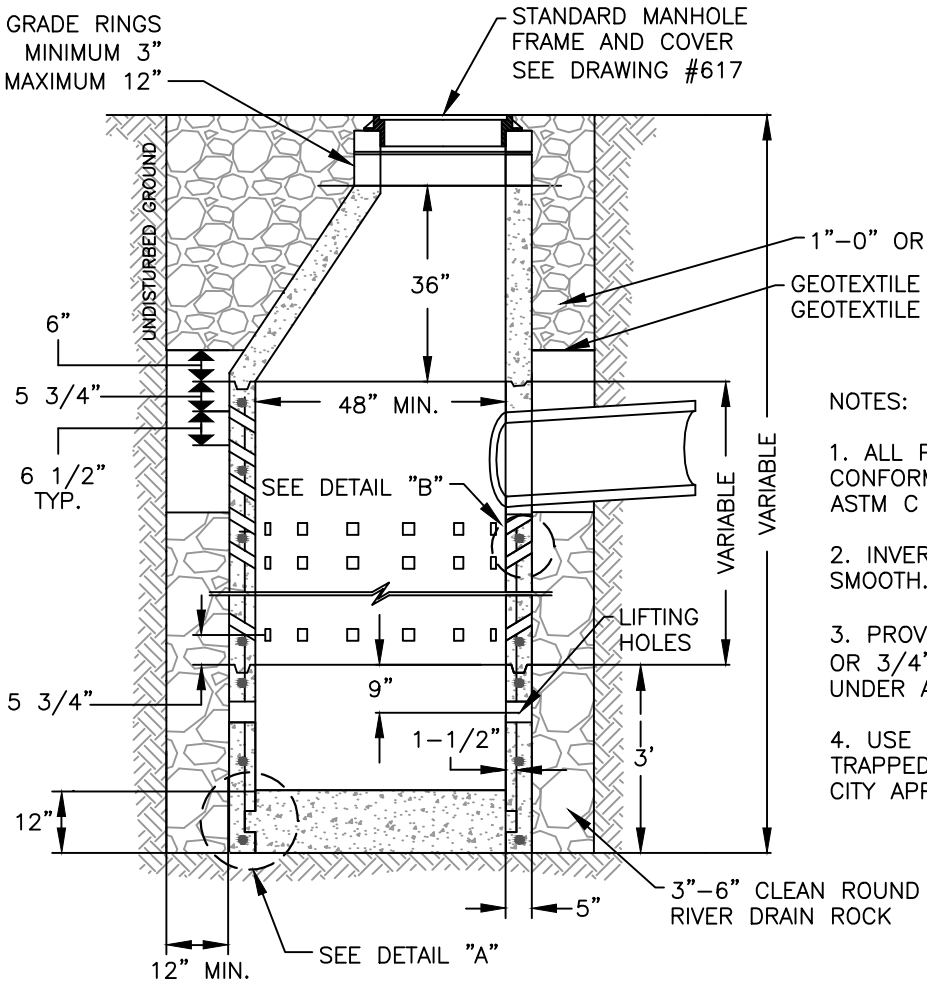

SECTION A–A

NOTES:

1. ALL PRECAST SECTIONS SHALL CONFORM TO REQUIREMENTS OF ASTM C 478.

2. INVERT SHALL BE LEVEL AND SMOOTH.

3. PROVIDE A MIN. OF 6" OF 1"–0" OR 3/4"–0" CLEAN CRUSHED ROCK UNDER ALL PIPES.

4. USE OF THIS SUMP TO INCLUDE TRAPPED CATCH BASIN AND REQUIRES CITY APPROVAL.

CITY OF MILWAUKIE, OREGON – PUBLIC WORKS DEPT.

Drywell

DRAWING NO. **613**

APPROVED Gary Parkin 12/12

CITY ENGINEER DATE

NO.	REVISIONS	DATE	BY
1	MANHOLE ACCESS ORIENTATION	03/10	BSA
2	GENERAL FORMATTING	12/10	MCP
3	REVISED DRAWING	12/12	MTC

DEC 2012

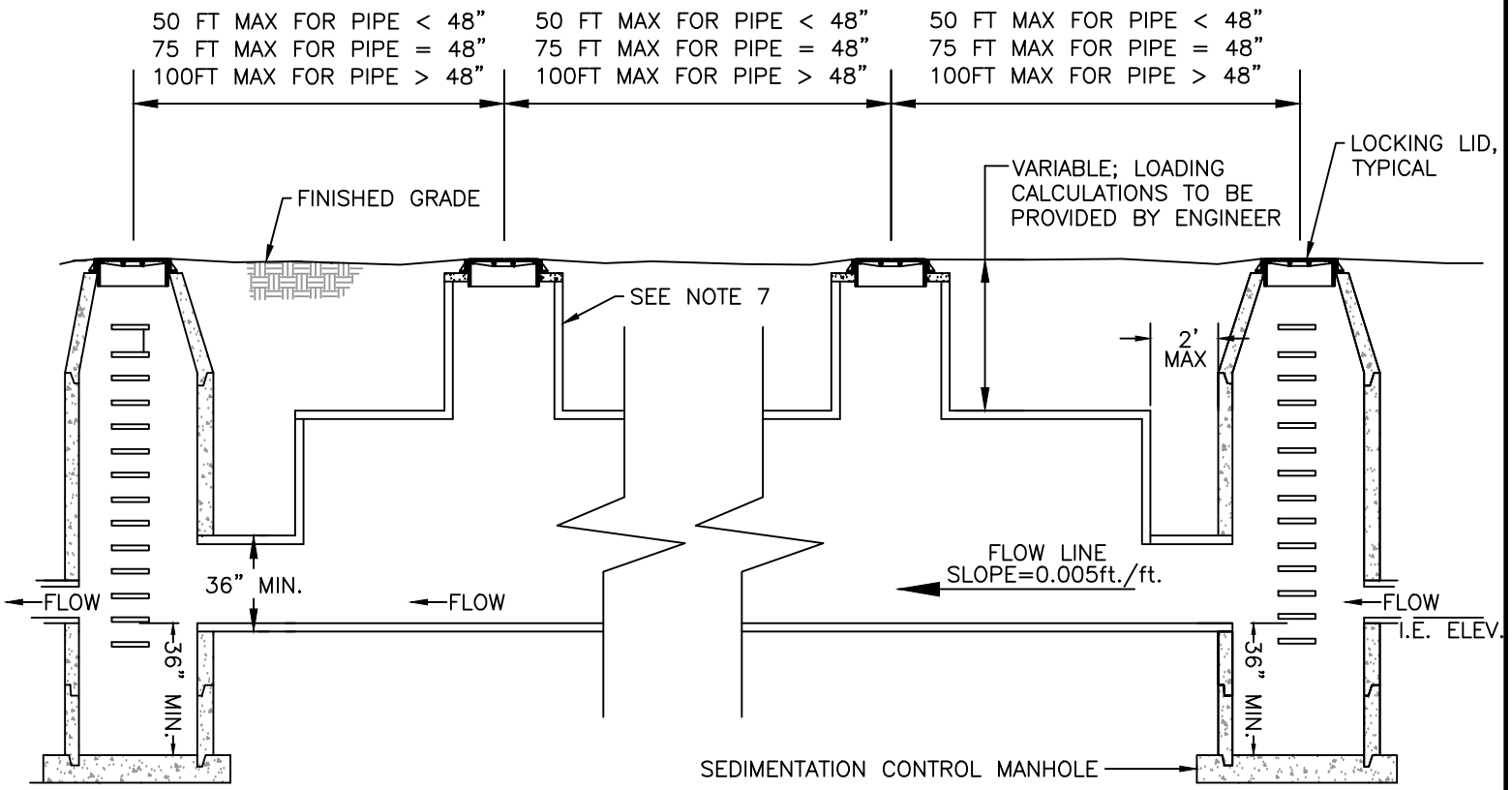

NOTES:

1. THIS DETAIL REPRESENTS A DESIGN CONCEPT. FINAL DESIGN MAY VARY DEPENDING ON SITE CONDITIONS AND SHALL BE APPROVED BY THE CITY.
2. MATERIALS FOR DETENTION PIPE AND MANHOLES SHALL HAVE DESIGN LIFE OF 75 YEARS AND SHALL BE APPROVED BY THE CITY.
3. SEDIMENTATION MANHOLE REQUIRED AT EACH END OF DETENTION PIPE.
4. MINIMUM SIZE PIPE ALLOWABLE FOR USE FOR DETENTION SHALL BE 36 INCHES IN DIAMETER, UNLESS OTHERWISE APPROVED BY THE CITY.
5. MANHOLES MUST BE CONCRETE UNLESS OTHERWISE APPROVED BY THE CITY.
6. MANHOLE MATERIAL MAY BE SAME AS DETENTION PIPE MATERIAL. ALL FACILITIES WITHIN PAVED RIGHT-OF-WAY MUST BE DESIGNED FOR WATER LOADING.
7. DETENTION SYSTEM SHALL BE WATER TIGHT UNLESS DESIGNED AS AN INFILTRATION SYSTEM WHICH HAS BEEN APPROVED BY THE CITY.

MILWAUKIE, OREGON ★ FOUNDED 1847 ★

CITY OF MILWAUKIE, OREGON – PUBLIC WORKS DEPT.

Underground Detention

NO.	REVISIONS	DATE	BY
1	GENERAL FORMATTING	12/10	MCP

APPROVED Gary Parkin 12/12
CITY ENGINEER DATE

DRAWING NO. 614

DEC 2012

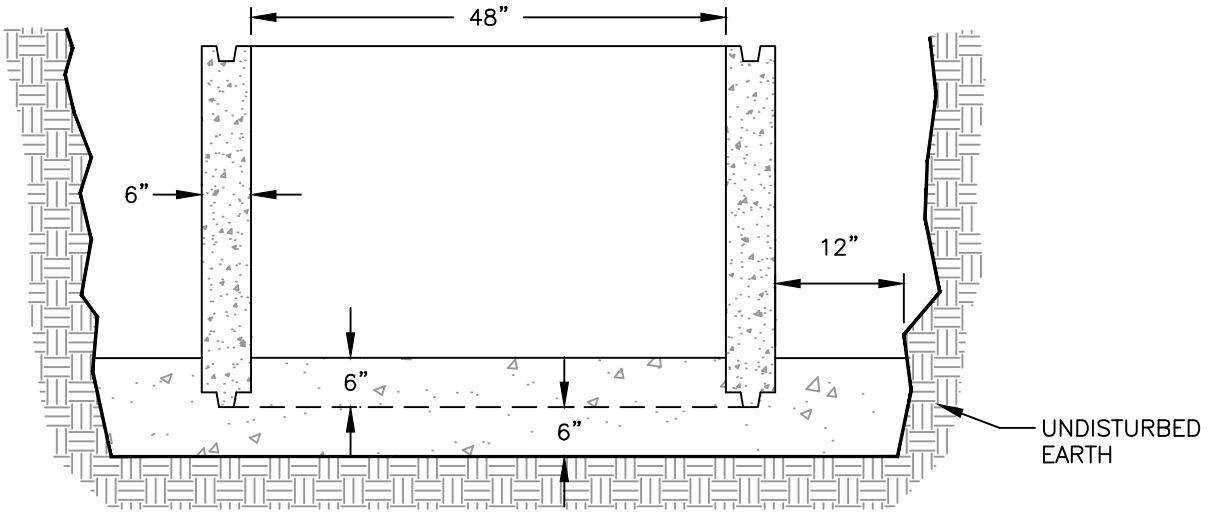

CAST–IN–PLACE MANHOLE BASE

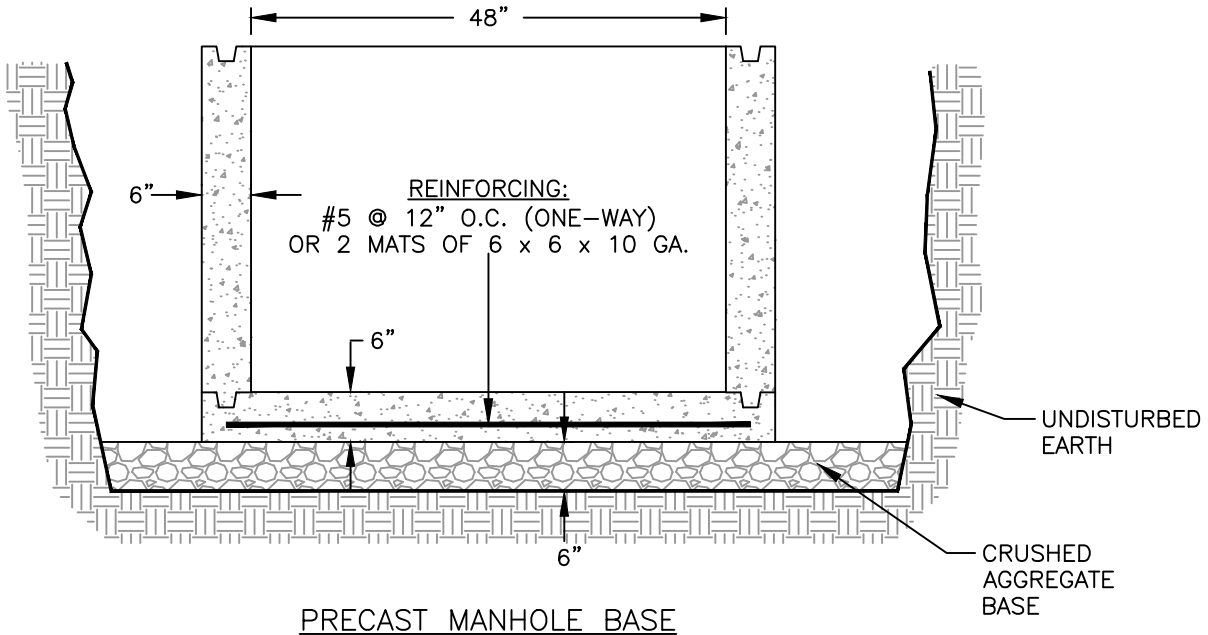

PRECAST MANHOLE BASE

CITY OF MILWAUKIE, OREGON – PUBLIC WORKS DEPT.

Manhole Base

DRAWING NO. 615

APPROVED Gary Parkin 12/12

CITY ENGINEER DATE

NO.	REVISIONS	DATE	BY
1	RECREATED DRAWING FOR CLARITY	12/10	MCP

DEC 2012

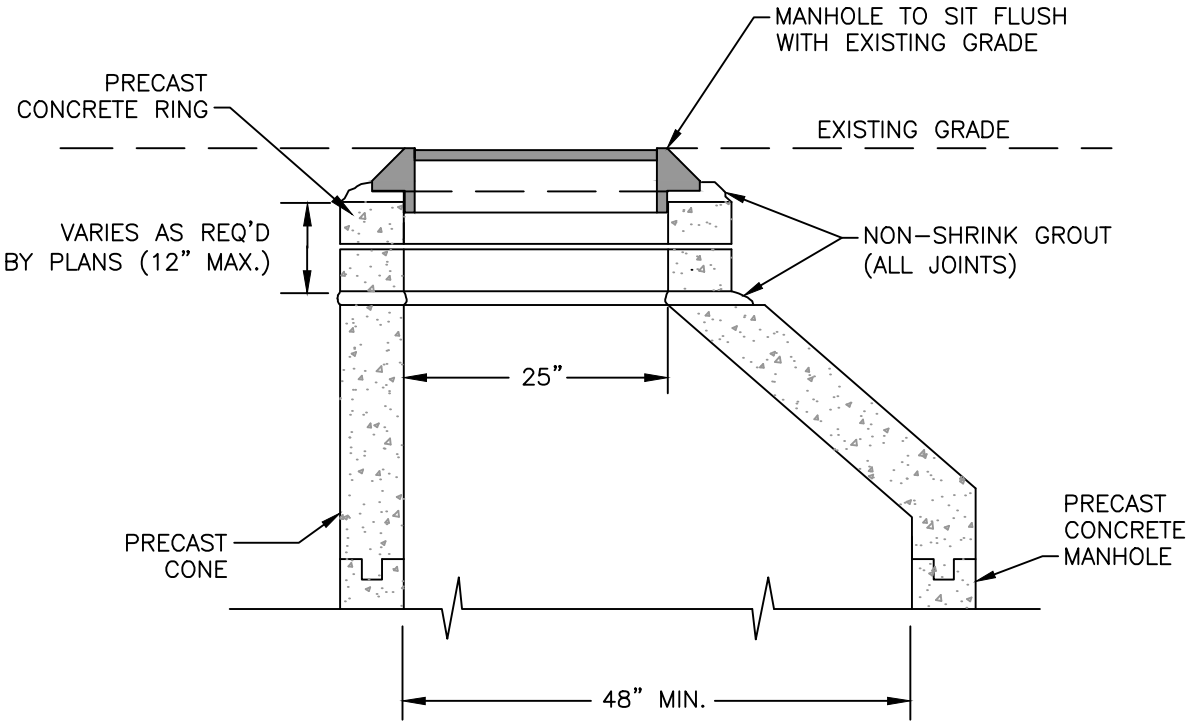

CITY OF MILWAUKIE, OREGON – PUBLIC WORKS DEPT.

Manhole Riser Details

DRAWING NO. 616

APPROVED Gary Parkin 12/12

CITY ENGINEER DATE

NO.	REVISIONS	DATE	BY
1	RESIZED DIMENSIONS AND TEXT	12/10	MCP

DEC 2012

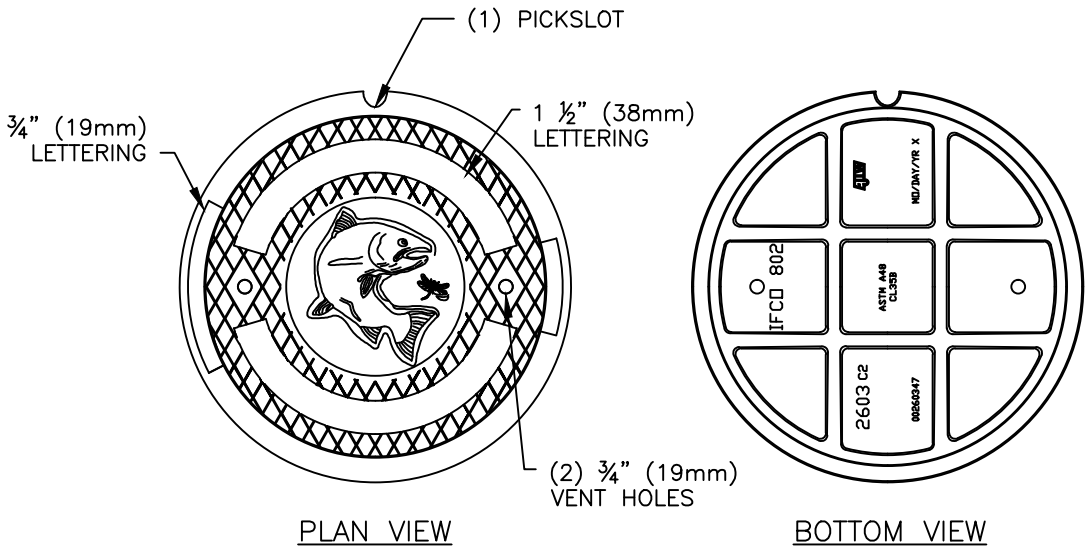

PLAN VIEW

BOTTOM VIEW

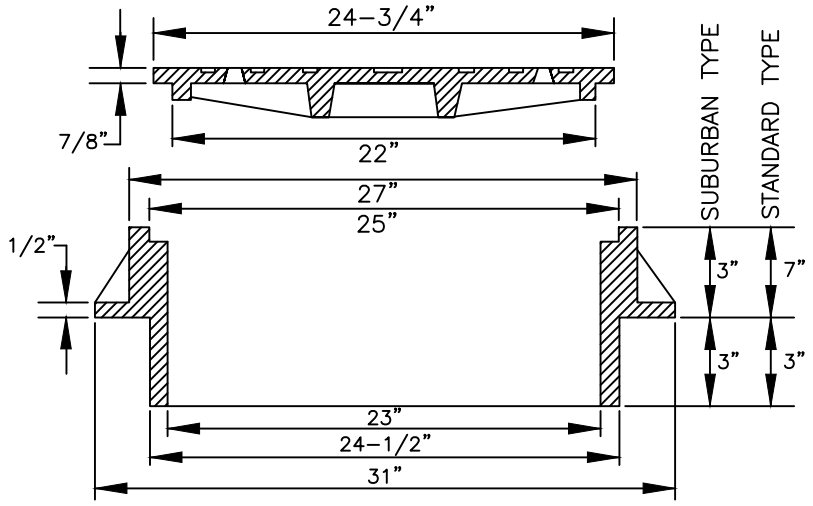

NOTES:

1. USE SUBURBAN TYPE ONLY IN NON-TRAFFIC AREAS, AND ONLY WITH APPROVAL BY THE CITY.
2. COVER AND FRAME SHALL BE GRAY CAST IRON ASTM A-48 CLASS 30.
3. COVER AND FRAME TO BE MACHINED TO A TRUE BEARING ALL AROUND.
4. NOTCH LID FOR LIFTING HOOK.

LIDS MAY BE PURCHASED FROM THE CITY OR THE MANUFACTURER

CITY OF MILWAUKIE, OREGON – PUBLIC WORKS DEPT.

Storm Manhole Frame and Lid

DRAWING NO. 617

APPROVED Gary Parkin 12/12

CITY ENGINEER DATE

NO.	REVISIONS	DATE	BY
1	REVISED DRYWELL LID TYPE	03/10	BSA
2	REMOVED NOTE ALLOWING OPEN GRATES	12/10	MCP
3	CHANGED LID DETAIL	12/12	MTC

DEC 2012

TAMPERPROOF MANHOLE RING

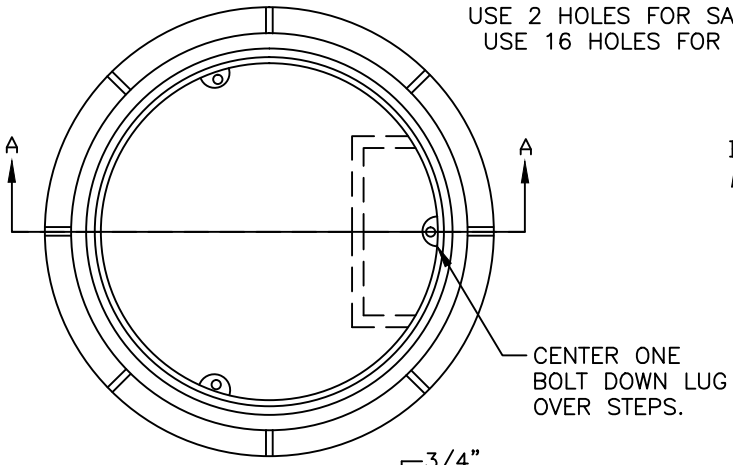

3–BOLT DOWN COVER

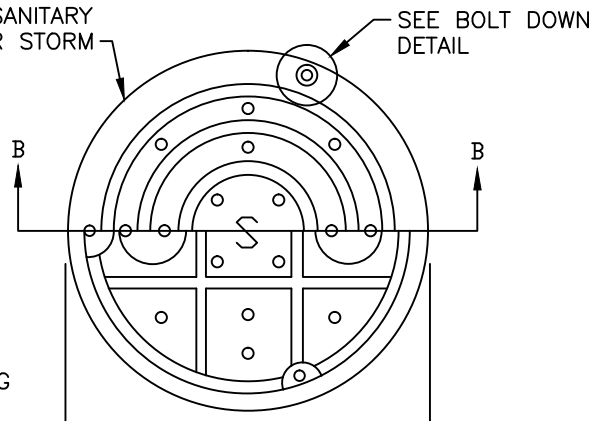

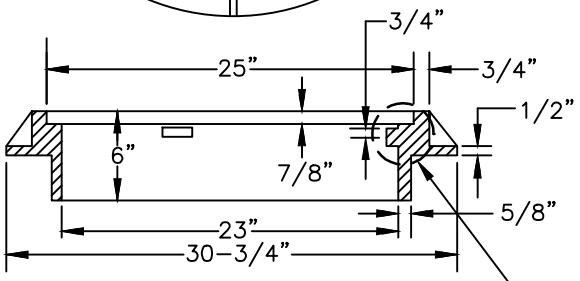

SECTION A–A

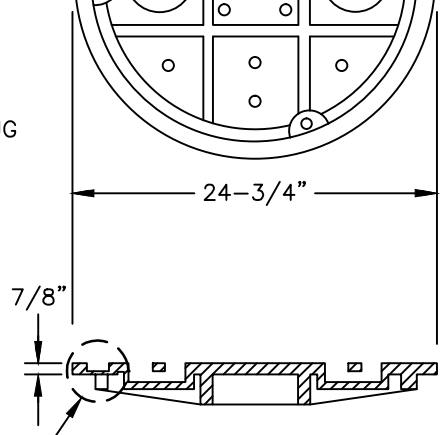

SEE BOLT
DOWN DETAIL

SECTION B–B

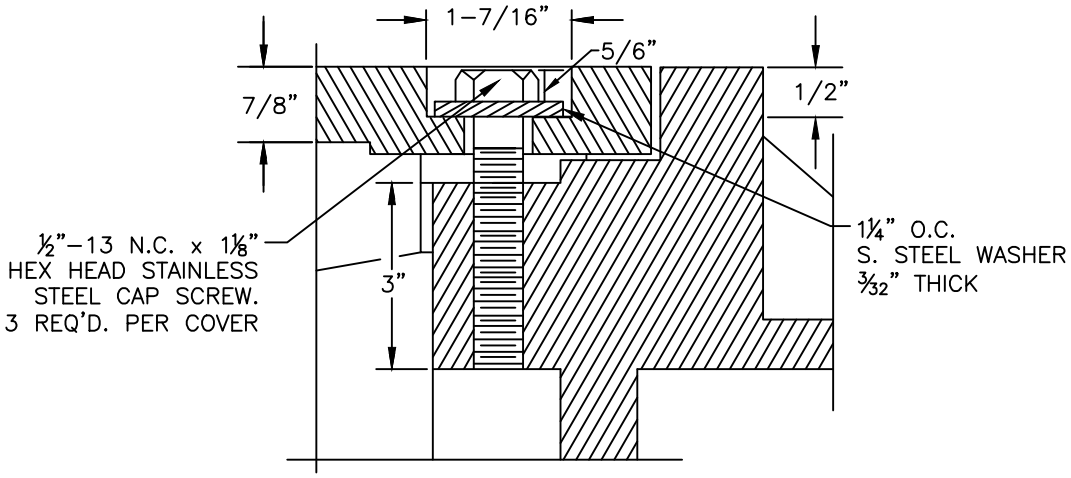

BOLT–DOWN DETAIL

NOTE: COVER AND FRAME SHALL BE GRAY CAST IRON ASTM A–48 CLASS 30.

CITY OF MILWAUKIE, OREGON – PUBLIC WORKS DEPT.

Boltdown Lid Detail

DRAWING NO. 618

APPROVED Gary Parkin 12/12

CITY ENGINEER DATE

NO.	REVISIONS	DATE	BY
1	CHANGED DRAWING NUMBER	12/12	MTC

DEC 2012

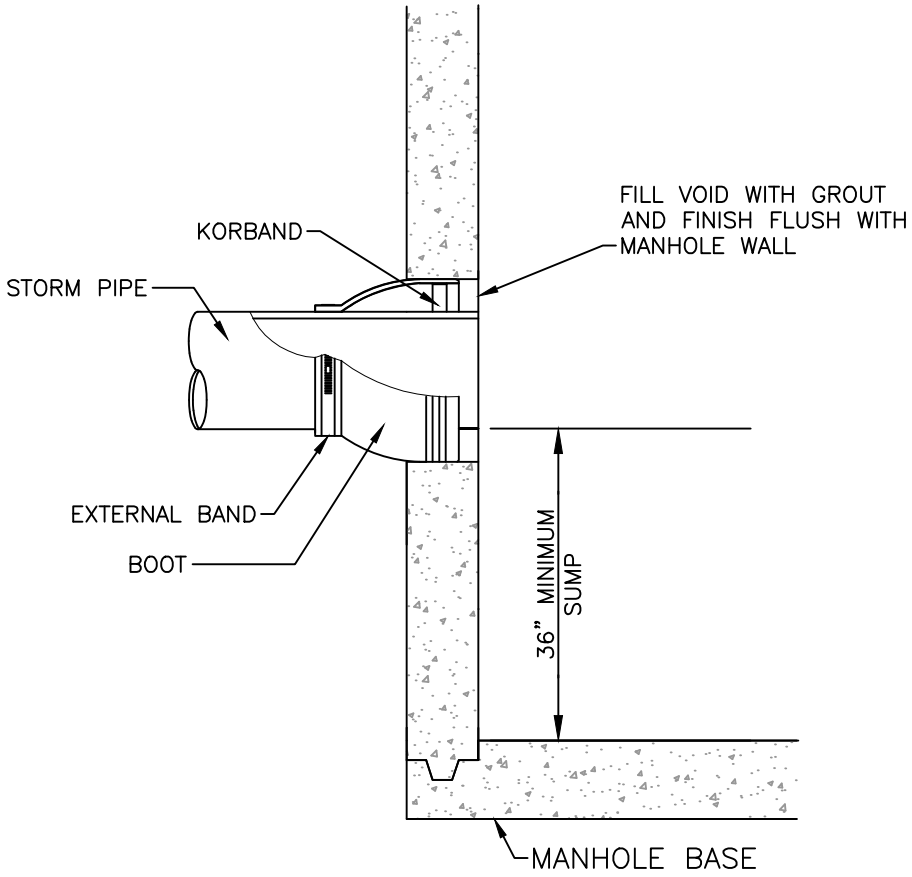

NOTES:

1. USE FLEXIBLE MANHOLE CONNECTION KOR–N–SEAL OR CITY ENGINEER APPROVED EQUIVALENT.

2. STRUCTURE OPENING(S) TO BE PRECAST OR CORE DRILLED ONLY.

CITY OF MILWAUKIE, OREGON – PUBLIC WORKS DEPT.

Manhole Connection Detail

DRAWING NO. 619

APPROVED Gary Parkin 12/12

CITY ENGINEER DATE

NO.	REVISIONS	DATE	BY
1	ADDED 36" SUMP REQUIREMENT	12/10	MCP
2	CHANGED DRAWING NUMBER	12/12	MTC

DEC 2012

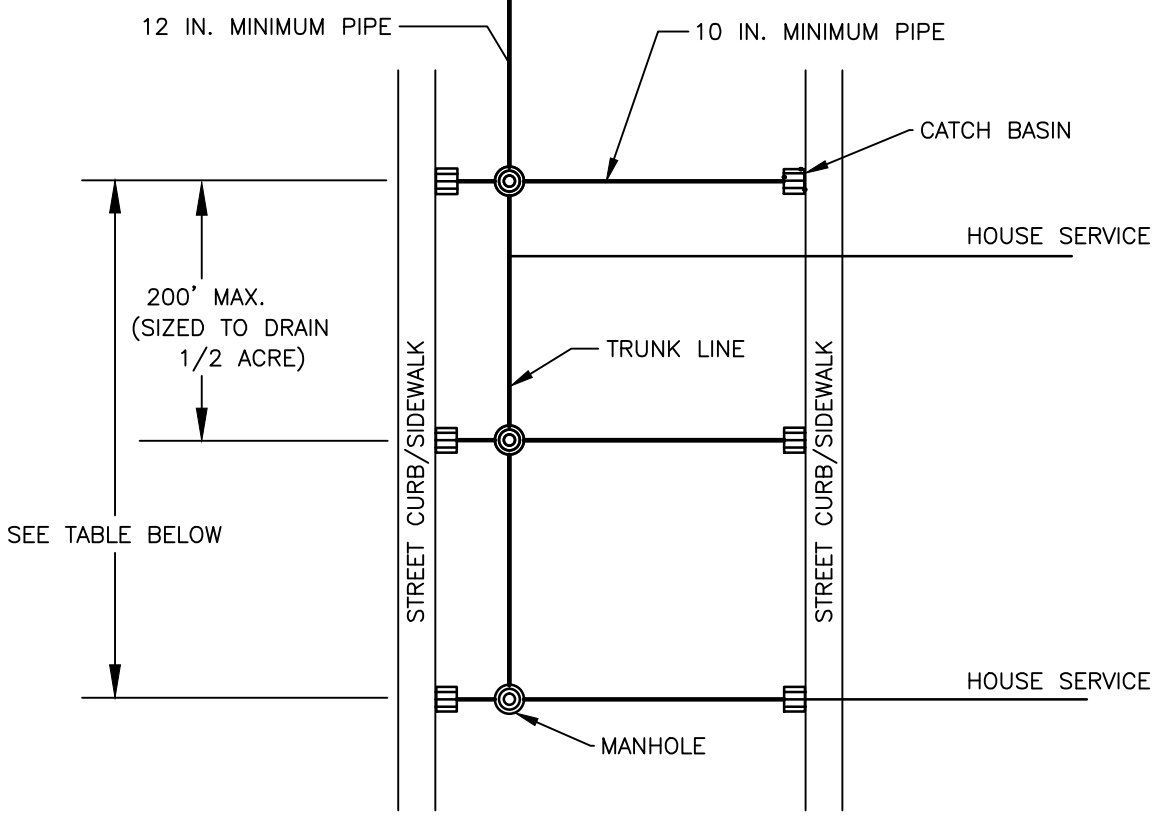

NOTE: HOUSE SERVICE LATERALS MAY BE CONNECTED TO MAIN TRUNK ONLY IF TRUNK LINE OUTFALLS TO A REGIONAL WATER QUALITY FACILITY. THE CONNECTION WILL BE REVIEWED AND APPROVED BY THE ENGINEERING DIRECTOR.

STORM COLLECTION			
STORM COLLECTION	MAX. DISTANCE BETWEEN M.H.	MIN. VELOCITY	MIN. GRADE
10/12–INCH PIPE	250–400 FEET 0–250 FEET	4 FT/SEC 3 FT/SEC	.010 SLOPE .005 SLOPE
15–INCH PIPE	250–400 FEET 0–250 FEET	4 FT/SEC 3 FT/SEC	.006 SLOPE .004 SLOPE
18–INCH PIPE	250–400 FEET 0–250 FEET	4 FT/SEC 3 FT/SEC	.005 SLOPE .003 SLOPE
24–INCH PIPE	300 FEET	3 FT/SEC	.002 SLOPE
30–INCH PIPE	300 FEET	3 FT/SEC	.002 SLOPE
36–INCH PIPE	300 FEET	3 FT/SEC	.002 SLOPE

CITY OF MILWAUKIE, OREGON – PUBLIC WORKS DEPT.

Storm Collection Guidelines

DRAWING NO. 620

APPROVED Gary Parkin 12/12
CITY ENGINEER DATE

NO.	REVISIONS	DATE	BY
1	ADDED HOUSE LATERAL NOTE	12/10	MCP
2	CHANGED DRAWING NUMBER	12/12	MTC

DEC 2012

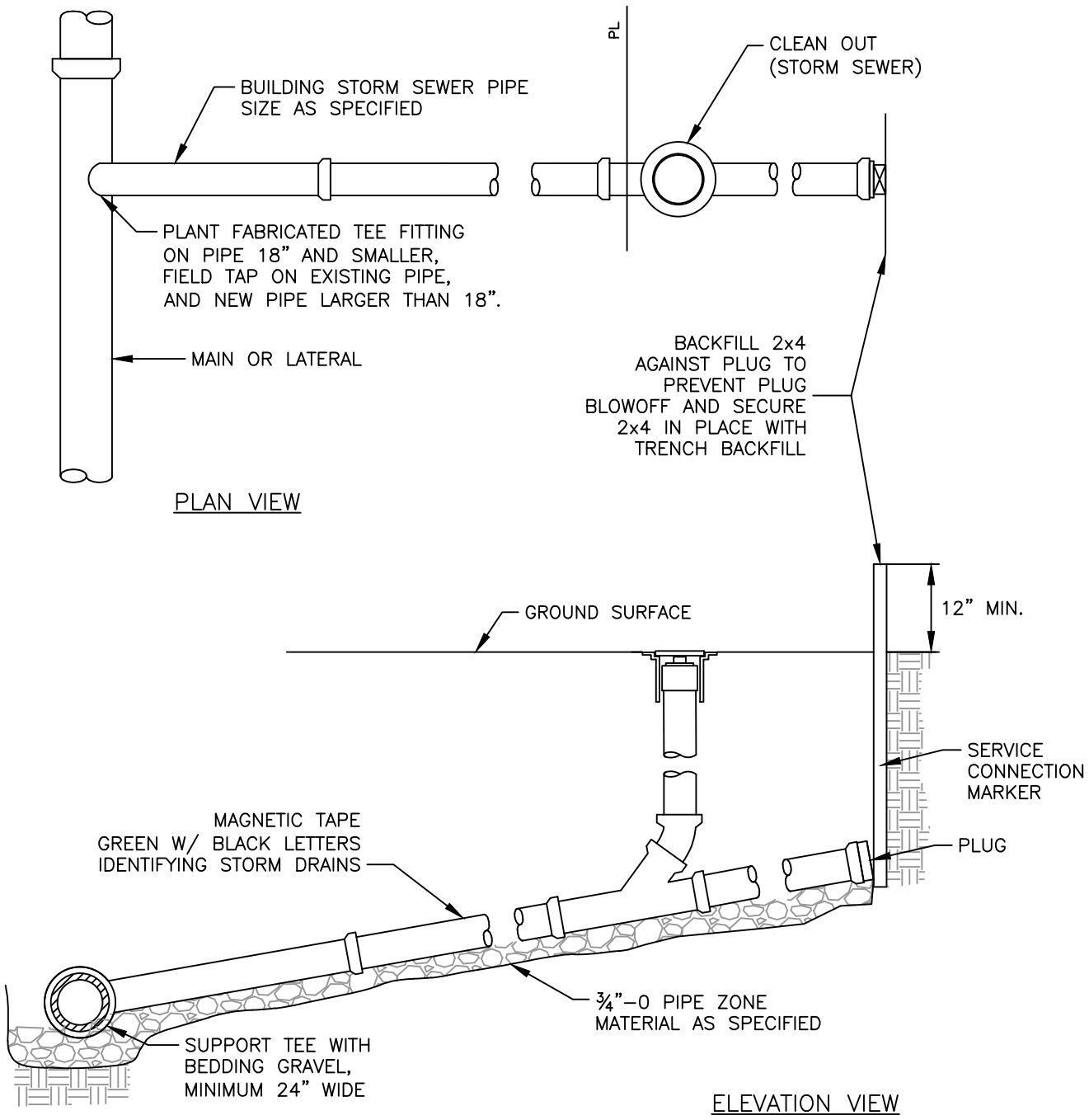

NOTE: HOUSE SERVICE LATERALS MAY BE CONNECTED TO MAIN TRUNK ONLY IF TRUNK LINE OUTFALLS TO A REGIONAL WATER QUALITY FACILITY. THE CONNECTION WILL BE REVIEWED AND APPROVED BY THE ENGINEERING DIRECTOR.

CITY OF MILWAUKIE, OREGON – PUBLIC WORKS DEPT.

Storm Lateral Connection

DRAWING NO. 621

APPROVED Gary Parkin 12/12

CITY ENGINEER DATE

NO.	REVISIONS	DATE	BY
1	ADDED HOUSE LATERAL NOTE	12/10	MCP
2	CHANGED DRAWING NUMBER	12/12	MTC

DEC 2012

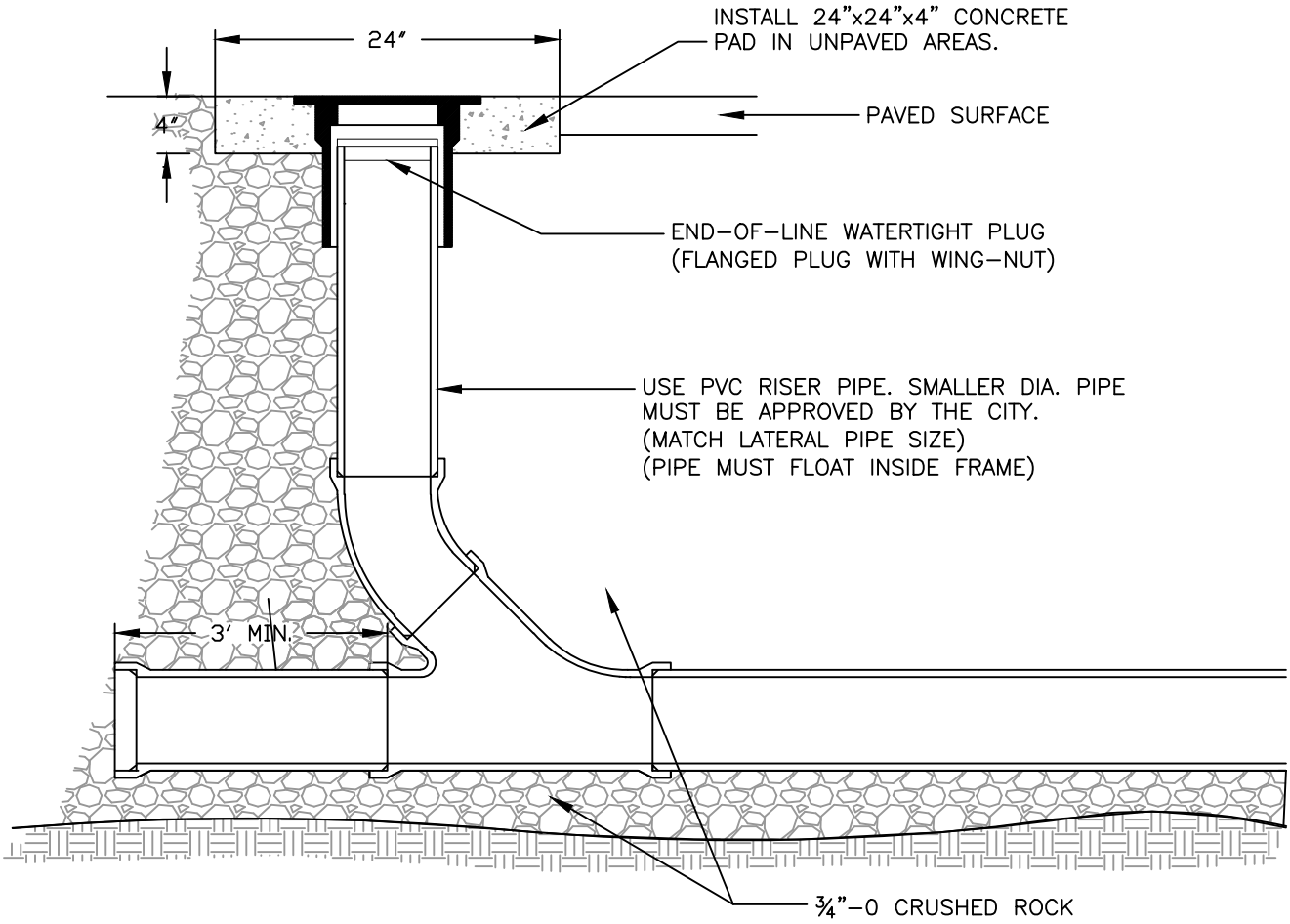

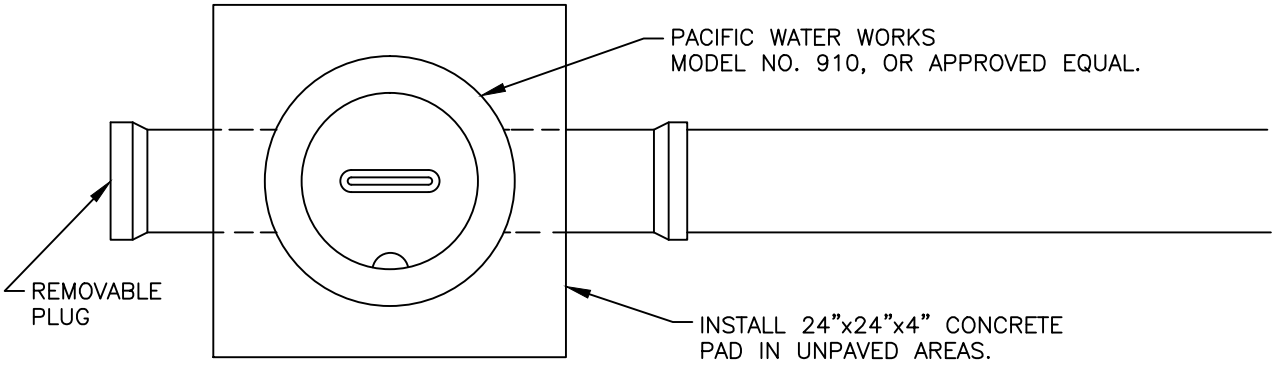

CITY OF MILWAUKIE, OREGON – PUBLIC WORKS DEPT.

Storm Lateral Cleanout

DRAWING NO. 622

APPROVED Gary Parkin 12/12

CITY ENGINEER DATE

NO.	REVISIONS	DATE	BY
1	CHANGED DRAWING NUMBER	12/12	MTC

DEC 2012

D = PIPE DIAMETER

W = BOTTOM WIDTH OF CHANNEL

P = WETTED PERIMETER OF CHANNEL

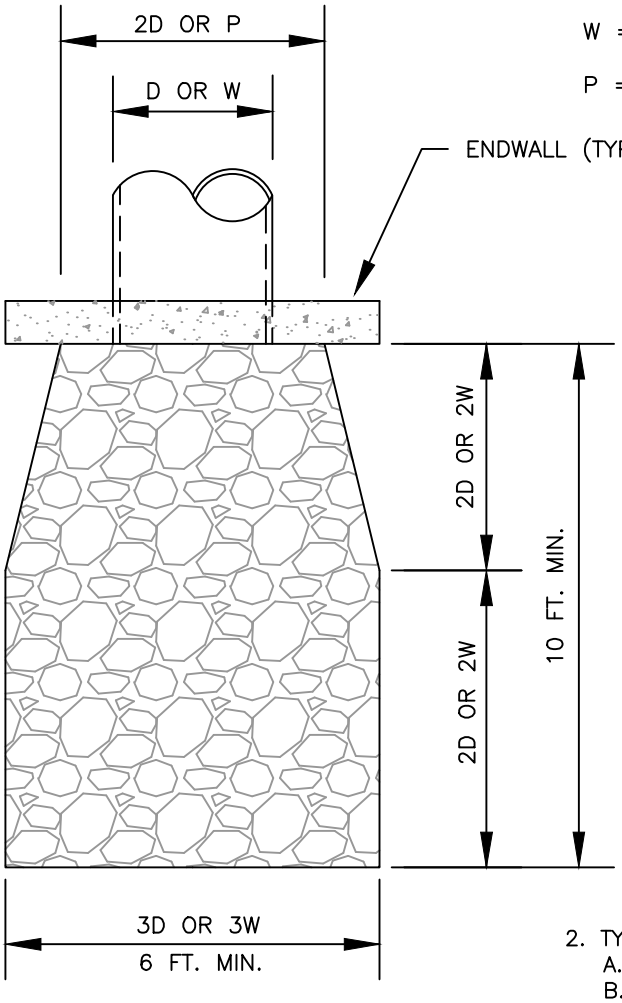

DESIGN VELOCITY (FT./SEC.)	ROCK CLASSIFICATION BY WEIGHT
6 – 10	200 LBS.
10 – 12	1/4 TON
12 – 14	1/2 TON
14 – 16	1 TON
16 – 18	2 TON

SELECTION OF RIP RAP
(SEE NOTE 1)

NOTES:

1. DIMENSIONS FOR RIPRAP APPLY TO FLOWS < 2 CFS RIP RAP FOR FLOWS > 2 CFS MUST BE DESIGNED BY AN ENGINEER. FLOW VELOCITIES > 20 FPS SHALL USE AN ENERGY DISSIPATER.

2. TYPE OF RIPRAP
   A. REGULAR QUARRY STONE.
   B. ROUNDED COBBLESTONE
   C. BROKEN CONCRETE (UPON APPROVAL OF THE DISTRICT.)

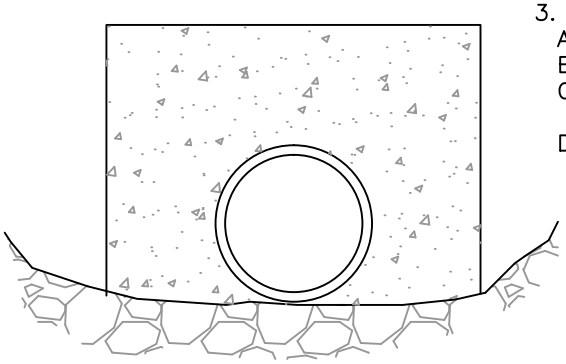

3. PLACEMENT
   A. MINIMUM DEPTH = 1.5 TIMES AVERAGE STONE SIZE.
   B. ROCKS SHALL BE PLACED TO PROVIDE A MINIMUM OF VOIDS.
   C. SURFACE ROCKS OR CONCRETE SHALL PROTRUDE AT LEAST 1/2 THEIR VERTICAL DIMENSION.
   D. RIPRAP IS TO BE PLACED OVER A NATURAL BEDDING, OR IT MAY BE GROUTED OR PLACED OVER A GRAVEL BEDDING AS REQUIRED BY THE CITY.

MILWAUKIE, OREGON · FOUNDED 1847

CITY OF MILWAUKIE, OREGON – PUBLIC WORKS DEPT.

Riprap

DRAWING NO. 623

APPROVED Gary Parkin 12/12
CITY ENGINEER DATE

NO.	REVISIONS	DATE	BY
1	ADJUSTED DRAWING NOTES TEXT SIZE	12/10	MCP
2	CHANGED DRAWING NUMBER	12/12	MTC

DEC 2012

PLANT NAME		PLANT LOCATION			CHARACTERISTICS				
Botanic Name, Common Name	Zone	Swale	Curb Extension	Planter	Oregon Native	Evergreen	Potential Height	O.C. Spacing	Under Powerlines
Herbaceous Plants									
Carex densa, Dense Sedge	A	X	X	X	Y	Y	24"	12"	
Carex testacea, New Zealand Orange Sedge	A	X	X	X	N	Y	24"	12"	
Deschampsia cespitosa, Tufted Hair Grass	A / B	X	X	X	Y	N	36"	12"	
Juncus patens, Speading Rush	A	X	X	X	N	Y	36"	12"	
Shrubs									
Euonymous japonicus 'Microphyllus,' Boxleaf Evergreen Euonymus	B	X	X		N	Y	24"	24"	
Gaultheria shallon, Salal	B	X	X		Y	Y	24"	24"	
Mahonia nervosa, Dull Oregon Grape	B	X	X		Y	Y	24"	24"	
Nandina Domestica, Gulf Stream	A / B	X	X	X	N	Y	24"	24"	
Groundcovers									
Arctostapylos uva-ursi, Kinnickkinnick	B	X	X		Y	Y	6"	12"	
Helictotrichon sempervirens, Blue Oat Grass	B	X	X		N	Y	24"	12"	
Mahonia repens, Creeping Oregon Grape	B	X	X		Y	Y	12"	12"	
Street Trees									
Acer campestre 'Evelyn,' Queen Elizabeth Hedge Maple	A / B	X	X	X	N	N	30'		N
Carpinus caroliniana, American Hornbeam	A / B	X	X	X	N	N	30'		Y
Gleditsia triacanthos 'Skycole,' Skyline Honeylocust	A / B	X	X	X	N	N	70'		N
Malus fusca, Pacific Crabapple	A	X	X	X	Y	N	30'		Y
Rhamnus purshiana, Cascara	A / B	X	X	X	Y	N	30'		Y

MILWAUKIE, OREGON FOUNDED 1847

CITY OF MILWAUKIE, OREGON – PUBLIC WORKS DEPT.

Approved Plantings for Water Quality Facilities

DRAWING NO. 624

APPROVED Gary Parkson 12/12

CITY ENGINEER DATE

NO.	REVISIONS	DATE	BY
1	NEW DRAWING	12/12	MCP

DEC 2012

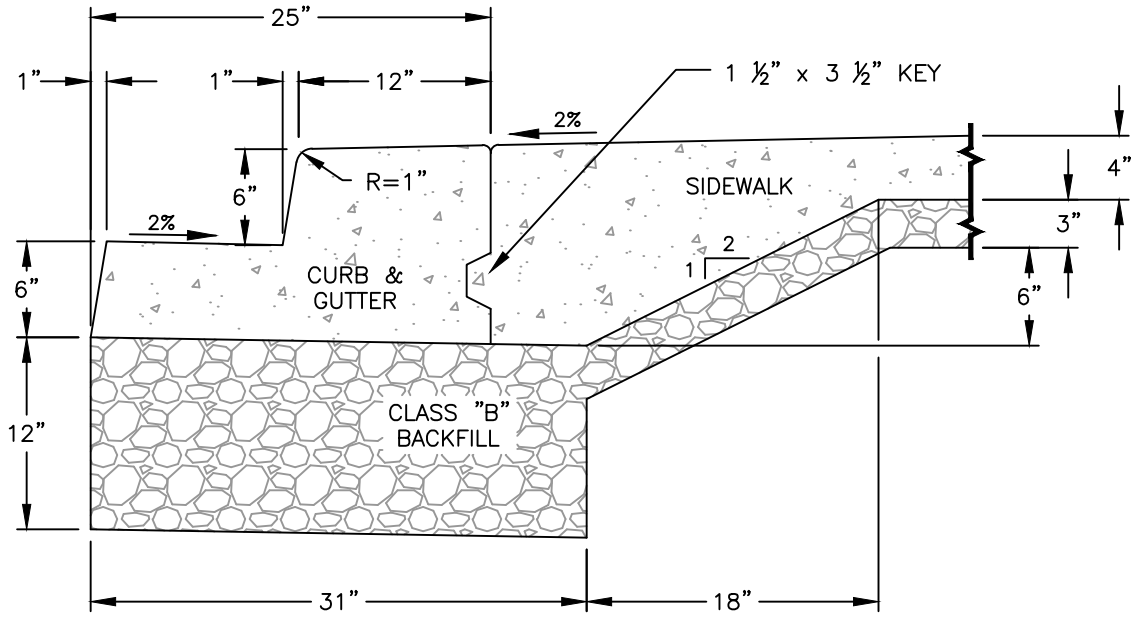

NOTES:

1. CONCRETE SHALL BE 3300 PSI AT 28 DAYS WITH A SLUMP RANGE OF 2" TO 4".
2.. BASE ROCK SHALL BE CLASS "B" BACKFILL AND COMPACTED TO 95% MAXIMUM DENSITY PER AASHTO T-180.
3. CURB & GUTTER AND SIDEWALK SHALL BE CONSTRUCTED IN SEPARATE POURS.
4. CONTRACTION JOINTS DEPTH SHALL BE A MINIMUM ⅓ OF THE CONCRETE THICKNESS. CONTRACTION JOINTS ARE REQUIRED AT EACH POINT OF TANGENCY AND EVERY 10 FEET OF CURB LENGTH. CONTRACTION JOINTS SHALL ALIGN WITH SIDEWALK JOINTS. SIDEWALK CONTRACTION JOINTS SHALL BE INSTALLED PER DETAIL #702 & #703.
5. THE BACK OF CURB SHALL BE TROWLED WITH A ½" RADIUS JOINT.
6. ALL SURFACES SHALL BE LIGHTLY BROOMED.
7. WHERE EXISTING CURB IS TO REMOVED OR REPLACED, THE CURB SHALL BE SAWCUT AND REMOVED AT A JOINT.

ATTENTION: ALL CONCRETE WORK WITHIN THE PUBLIC RIGHT-OF-WAY REQUIRES A RIGHT-OF-WAY PERMIT IN ADDITION TO SUB-GRADE, BASE ROCK, AND CONCRETE FORM INSPECTION AND APPROVAL BY THE CITY INSPECTOR PRIOR TO POURING CONCRETE. CALL 503-786-7575, 24 HOURS IN ADVANCE OF WORK TO SCHEDULE AN INSPECTION.

CITY OF MILWAUKIE, OREGON – PUBLIC WORKS DEPT.

Downtown Curb & Gutter

DRAWING NO. 700

APPROVED Gary Parkin 12/12

CITY ENGINEER DATE

NO.	REVISIONS	DATE	BY
1	NEW DRAWING	10/09	ZJW

DEC 2012

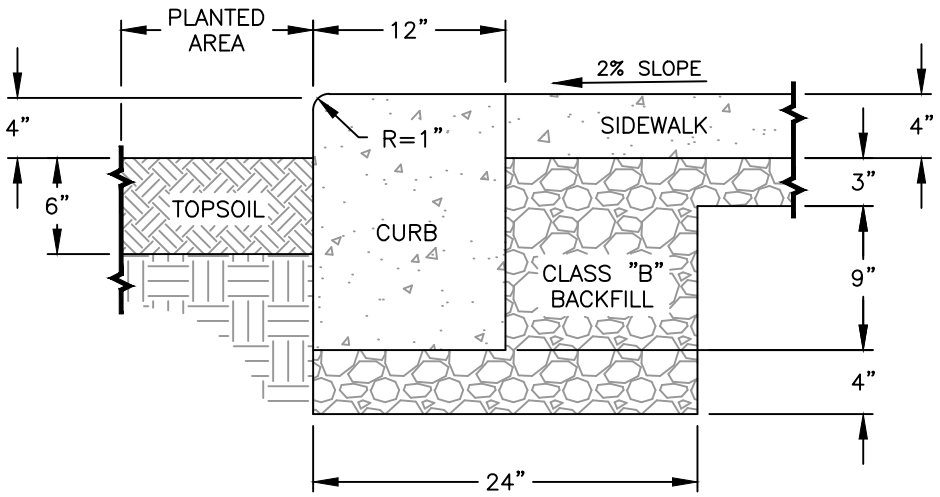

12" STANDARD CURB DETAIL

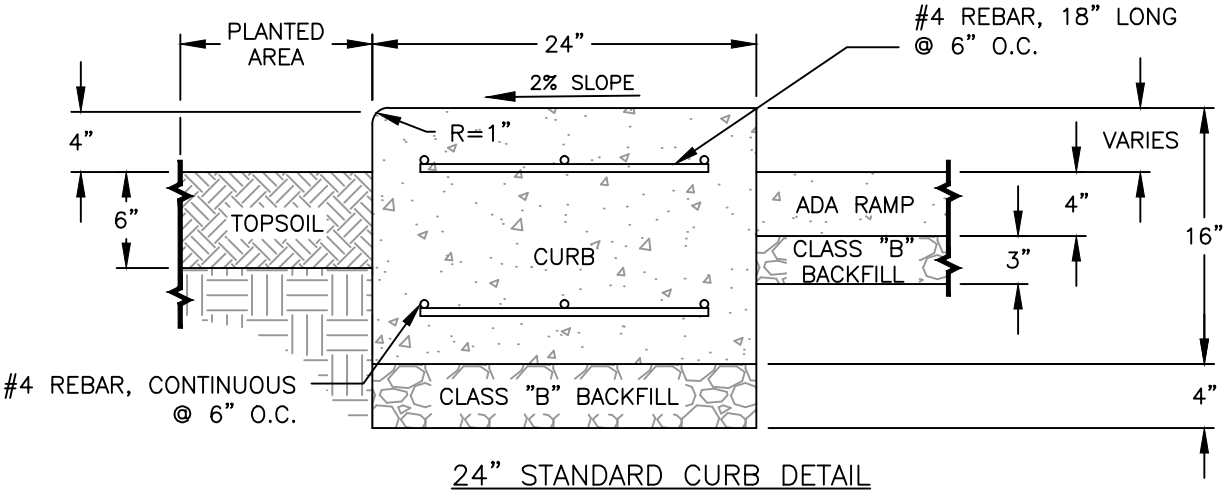

24" STANDARD CURB DETAIL

NOTES:

1. CONCRETE SHALL BE 3300 PSI AT 28 DAYS WITH A SLUMP RANGE OF 2" TO 4".
2. BASE ROCK SHALL BE CLASS "B" BACKFILL AND COMPACTED TO 95% MAXIMUM DENSITY OF AASHTO T-180.
3. REBAR SHALL BE INSTALLED WITH A 3" CLEARANCE FROM ALL CONCRETE SURFACES.
4. CURB AND SIDEWALK SHALL BE CONSTRUCTED IN SEPARATE POURS.
5. CONTRACTION JOINTS DEPTH SHALL BE A MINIMUM ⅓ OF THE CONCRETE THICKNESS. CONTRACTION JOINTS ARE REQUIRED AT EACH POINT OF TANGENCY AND EVERY 10 FEET OF CURB LENGTH. CONTRACTION JOINTS SHALL ALIGN WITH SIDEWALK JOINTS. SIDEWALK CONTRACTION JOINTS SHALL BE INSTALLED PER DRAWING NO. #702 & #703.
6. THE BACK OF CURB SHALL BE TROWELED WITH A ½" RADIUS JOINT.
7. ALL SURFACES SHALL BE LIGHTLY BROOMED.
8. WHERE EXISTING CURB IS TO REMOVED OR REPLACED, THE CURB SHALL BE SAWCUT AND REMOVED AT A JOINT.

ATTENTION: ALL CONCRETE WORK WITHIN THE PUBLIC RIGHT-OF-WAY REQUIRES A RIGHT-OF-WAY PERMIT IN ADDITION TO SUB-GRADE, BASE ROCK, AND CONCRETE FORM INSPECTION AND APPROVAL BY THE CITY INSPECTOR PRIOR TO POURING CONCRETE. CALL 503-786-7575, 24 HOURS IN ADVANCE OF WORK TO SCHEDULE AN INSPECTION.

CITY OF MILWAUKIE, OREGON – PUBLIC WORKS DEPT.

Downtown Curb

DRAWING NO. 701

APPROVED Gary Parkin 12/12
CITY ENGINEER DATE

NO.	REVISIONS	DATE	BY
1	NEW DRAWING	10/09	ZJW

DEC 2012

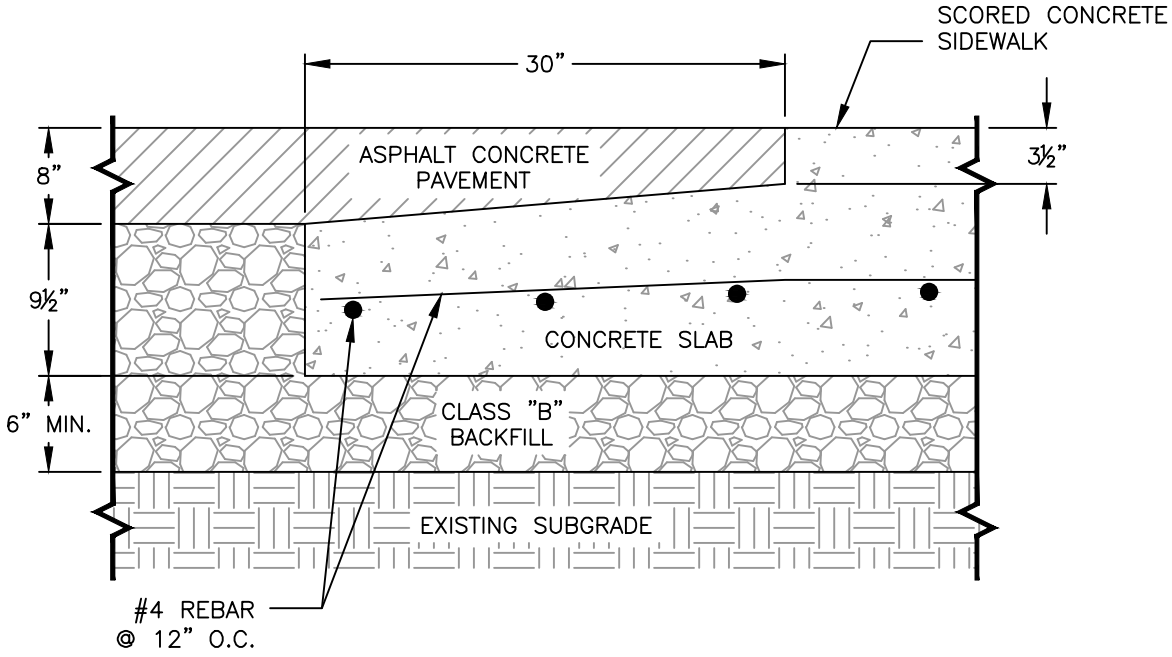

NOTES:

1. CONCRETE SHALL BE 4000 PSI AT 28 DAYS WITH A SLUMP RANGE OF 2" TO 4".
2. BASE ROCK SHALL BE CLASS "B" BACKFILL COMPACTED TO 95% MAXIMUM DENSITY PER AASHTO T-180.
3. ALL EXPOSED SURFACES SHALL BE LIGHTLY BROOMED.

ATTENTION: ALL CONCRETE WORK WITHIN THE PUBLIC RIGHT-OF-WAY REQUIRES A RIGHT-OF-WAY PERMIT IN ADDITION TO SUB-GRADE, BASE ROCK, AND CONCRETE FORM INSPECTION AND APPROVAL BY THE CITY INSPECTOR PRIOR TO POURING CONCRETE. CALL 503-786-7575, 24 HOURS IN ADVANCE OF WORK TO SCHEDULE AN INSPECTION.

CITY OF MILWAUKIE, OREGON – PUBLIC WORKS DEPT.

Downtown Crosswalk Transition

DRAWING NO. 702

APPROVED Gary Parkin 12/12

CITY ENGINEER DATE

NO.	REVISIONS	DATE	BY
1	NEW DRAWING	10/09	ZJW

DEC 2012

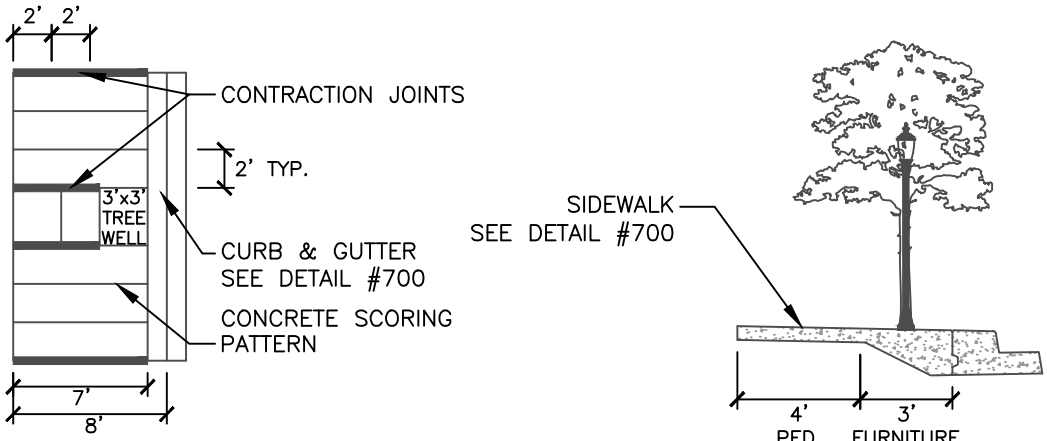

8' SIDEWALK WIDTH

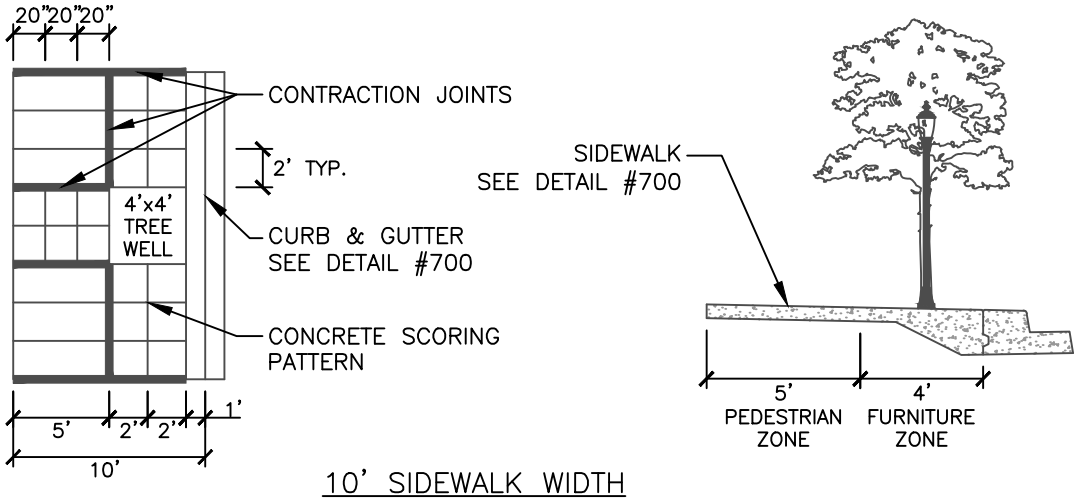

10' SIDEWALK WIDTH

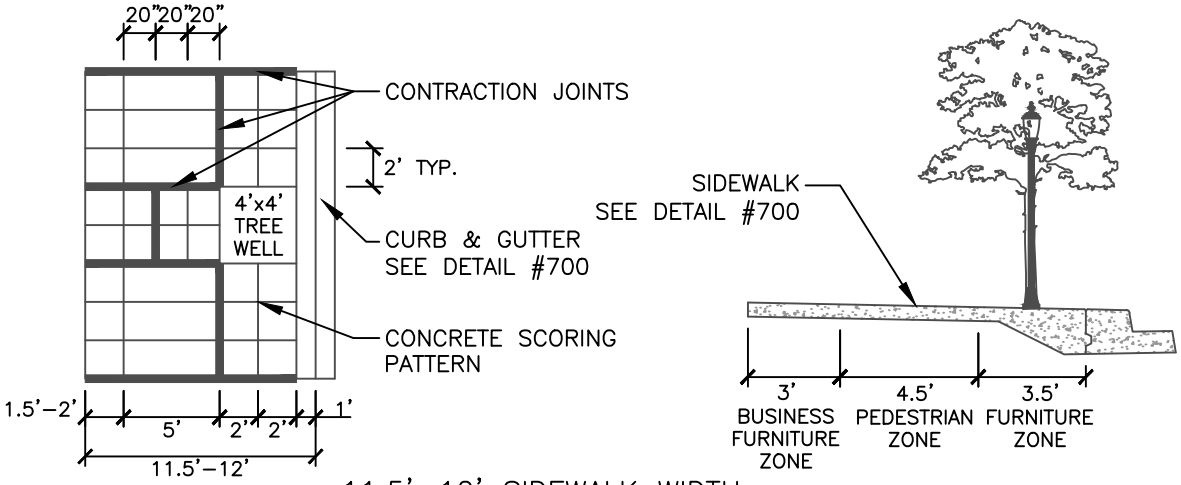

11.5'–12' SIDEWALK WIDTH

CITY OF MILWAUKIE, OREGON – PUBLIC WORKS DEPT.

Downtown Sidewalk

DRAWING NO. 703

APPROVED Gary Parkin 12/12

CITY ENGINEER DATE

NO.	REVISIONS	DATE	BY
1	NEW DRAWING	10/09	ZJW

DEC 2012

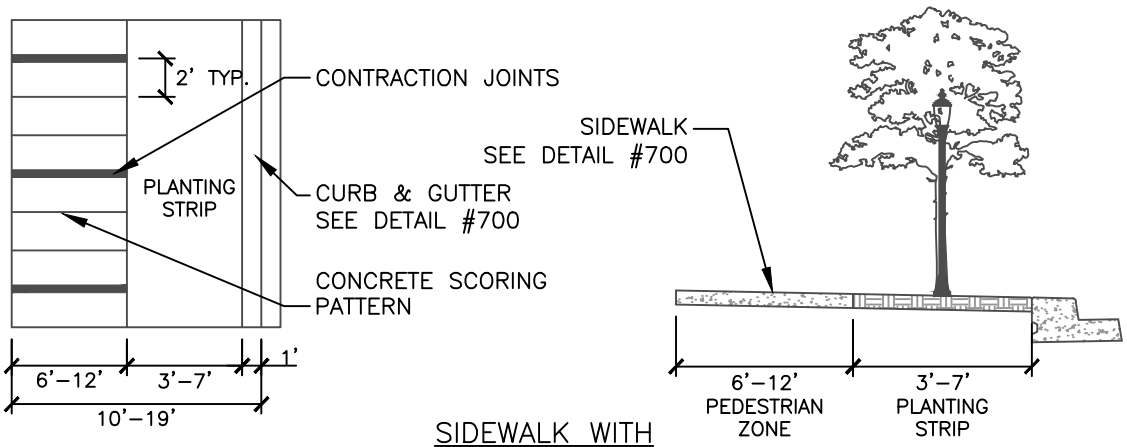

SIDEWALK WITH PLANTING STRIP

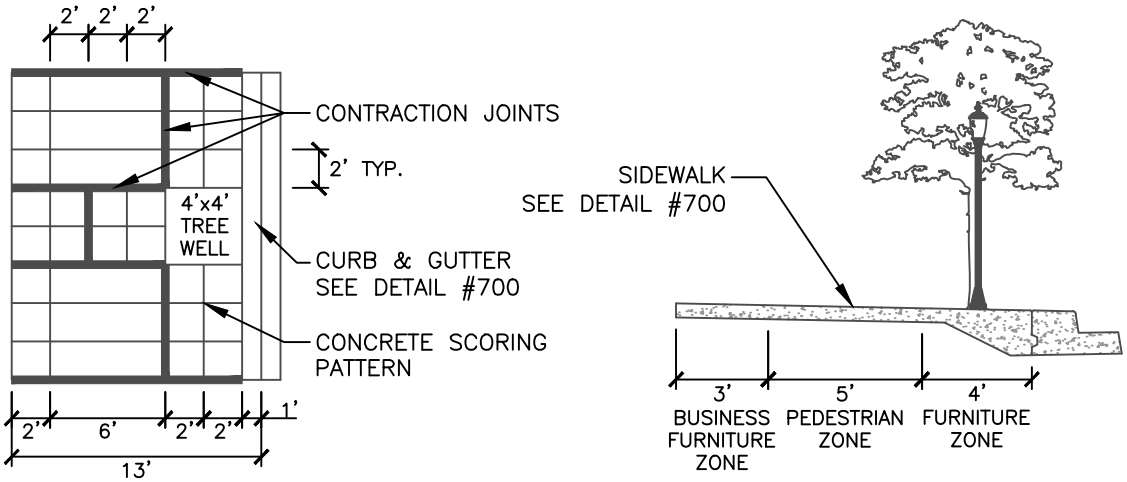

13' SIDEWALK WIDTH

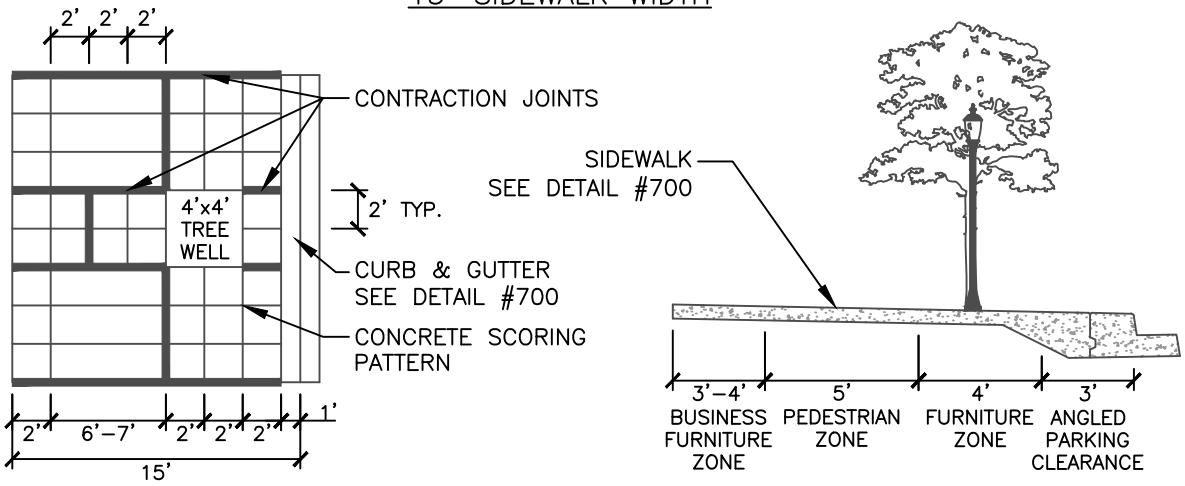

15'–16' SIDEWALK WIDTH

CITY OF MILWAUKIE, OREGON – PUBLIC WORKS DEPT.

Downtown Sidewalk

DRAWING NO. 704

APPROVED Gary Parkin 12/12
CITY ENGINEER DATE

NO.	REVISIONS	DATE	BY
1	NEW DRAWING	10/09	ZJW

DEC 2012

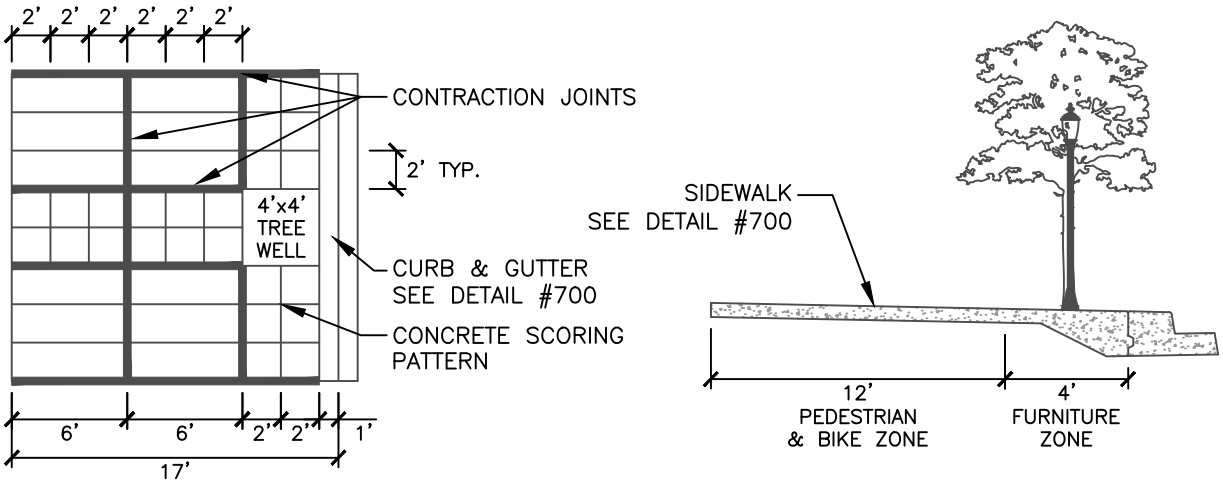

17' MULTI–USE PATH

CITY OF MILWAUKIE, OREGON – PUBLIC WORKS DEPT.

Downtown Sidewalk

DRAWING NO. 705

APPROVED Gary Parkin 12/12

CITY ENGINEER DATE

NO.	REVISIONS	DATE	BY
1	ADDED 17' MULTI–USE PATH	12/11	ZJW

DEC 2012

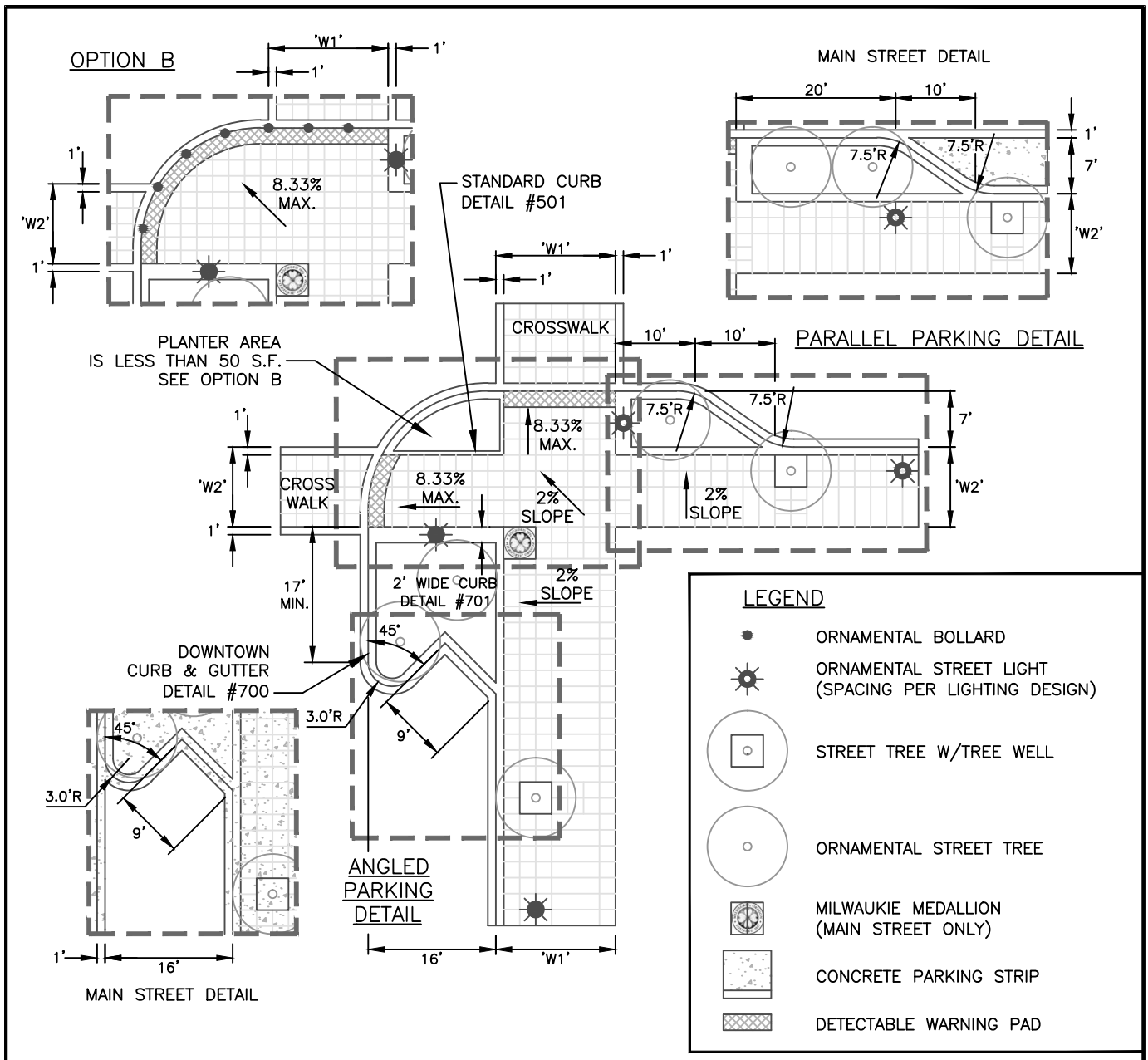

CONSTRUCTION NOTES

1. SIDEWALK WIDTH, DIMENSION 'W1' AND 'W2', PER STREET CROSS–SECTION DETAIL FOR STREETS BEING DESIGNED.
2. PROVIDE 35' CURB RADIUS, DIMENSION "R1", FOR ALL STREET CORNERS WITH RIGHT–TURNING TRANSIT MOVEMENTS. PROVIDE 15' CURB RADIUS FOR ALL OTHER STREET CORNERS.
3. CROSSWALK SCORING SHALL MATCH ADJACENT SIDEWALK, MAXIMUM 2'x2' SQUARES. SEE DETAIL #702 FOR CROSSWALK TO STREET PAVEMENT TRANSITION DETAIL.
4. CONCRETE PARKING AREA SHALL BE CONSTRUCTED PER STREET CROSS–SECTION DETAIL FOR MAIN STREET.
5. DETECTABLE WARNING PAD SHALL BE 24" LONG IN DIRECTION OF TRAVEL AND INSTALLED ALONG THE FULL WIDTH OF THE BOTTOM OF THE SIDEWALK RAMP. PADS SHALL BE CUT TO FIT ALONG CURB RADIUS. MASCO CAST–IN–TACT (BLACK) OR APPROVED EQUAL.

MILWAUKIE, OREGON FOUNDED 1847

CITY OF MILWAUKIE, OREGON – PUBLIC WORKS DEPT.

Downtown Intersection Curb Extension

DRAWING NO. 706

APPROVED Gary Parkin 12/12

CITY ENGINEER DATE

NO.	REVISIONS	DATE	BY
1	NEW DRAWING	10/09	ZJW

DEC 2012

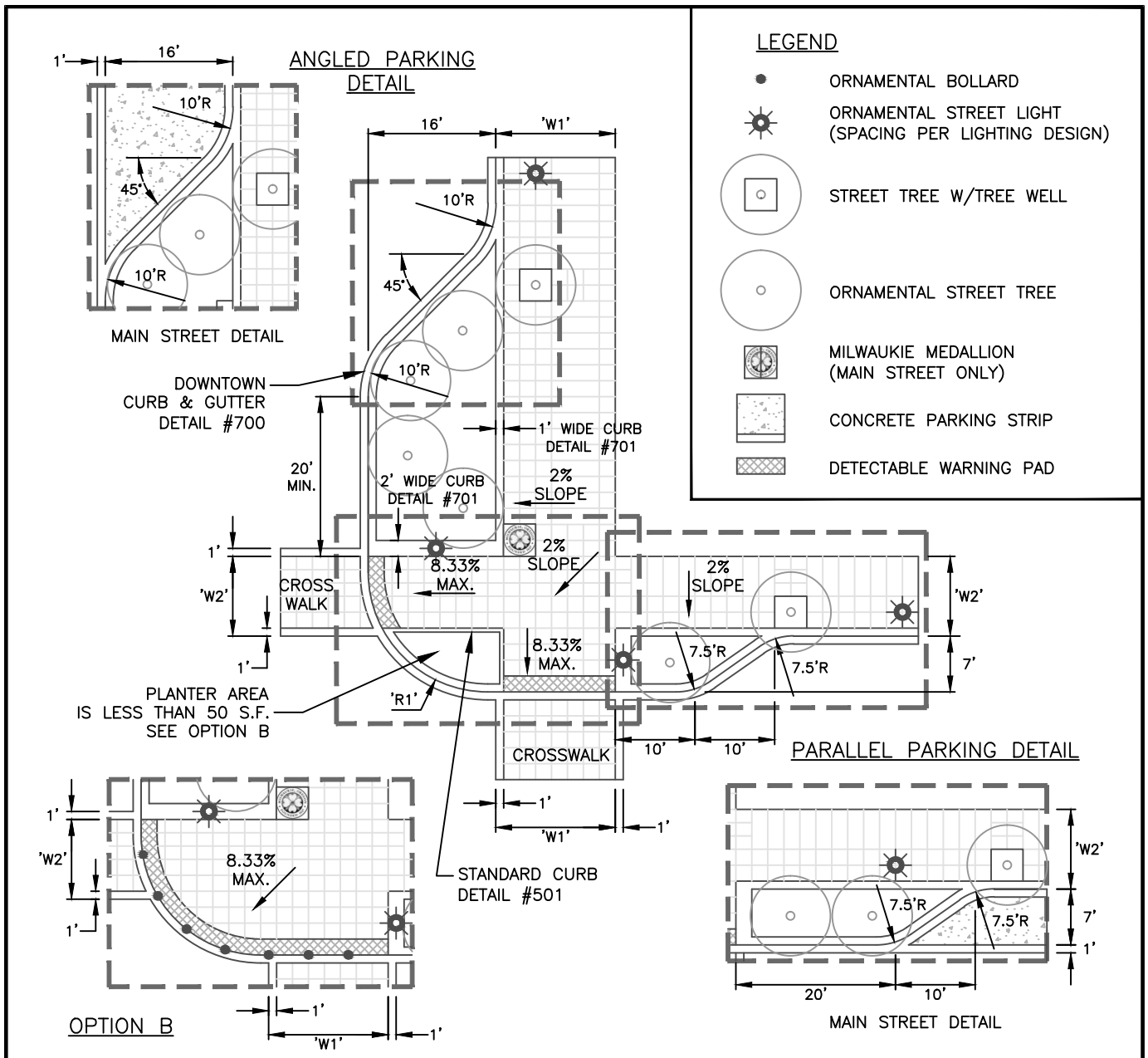

CONSTRUCTION NOTES

1. SIDEWALK WIDTH, DIMENSION 'W1' AND 'W2', PER STREET CROSS-SECTION DETAIL FOR STREETS BEING DESIGNED.
2. PROVIDE 35' CURB RADIUS, DIMENSION "R1", FOR ALL STREET CORNERS WITH RIGHT-TURNING TRANSIT MOVEMENTS. PROVIDE 15' CURB RADIUS FOR ALL OTHER STREET CORNERS.
3. CROSSWALK SCORING SHALL MATCH ADJACENT SIDEWALK, MAXIMUM 2'x2' SQUARES. SEE DETAIL #702 FOR CROSSWALK TO STREET PAVEMENT TRANSITION DETAIL.
4. CONCRETE PARKING AREA SHALL BE CONSTRUCTED PER STREET CROSS-SECTION DETAIL FOR MAIN STREET.
5. DETECTABLE WARNING PAD SHALL BE 24" LONG IN DIRECTION OF TRAVEL AND INSTALLED ALONG THE FULL WIDTH OF THE BOTTOM OF THE SIDEWALK RAMP. PADS SHALL BE CUT TO FIT ALONG CURB RADIUS. MASCO CAST-IN-TACT (BLACK) OR APPROVED EQUAL.

MILWAUKIE, OREGON FOUNDED 1847

CITY OF MILWAUKIE, OREGON – PUBLIC WORKS DEPT.

Downtown Intersection Curb Extension

DRAWING NO. 707

APPROVED Gary Parkin 12/12

CITY ENGINEER DATE

NO.	REVISIONS	DATE	BY
1	NEW DRAWING	10/09	ZJW

DEC 2012

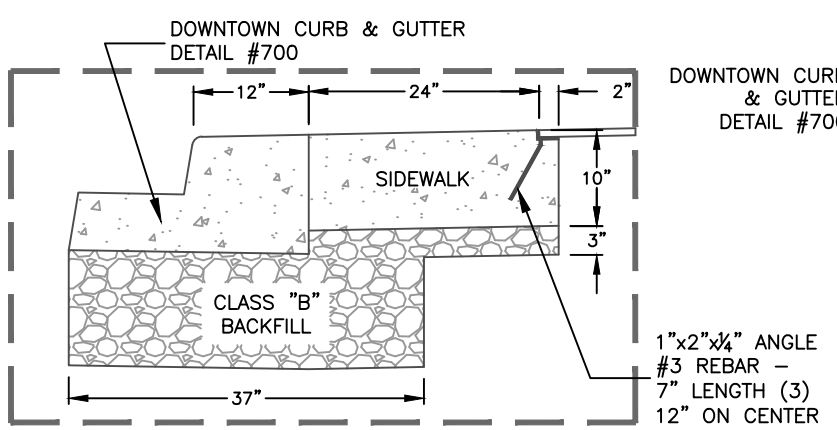

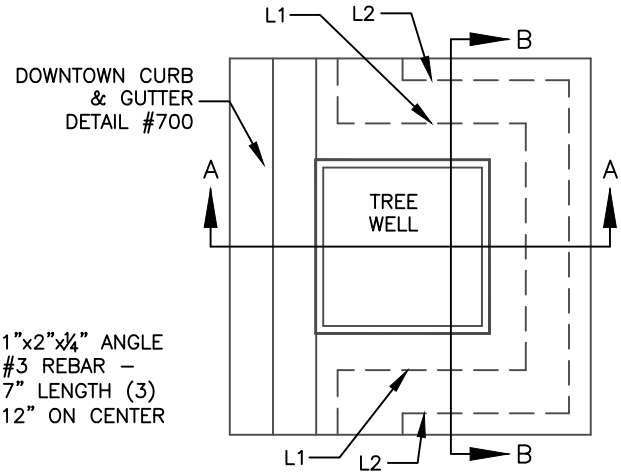

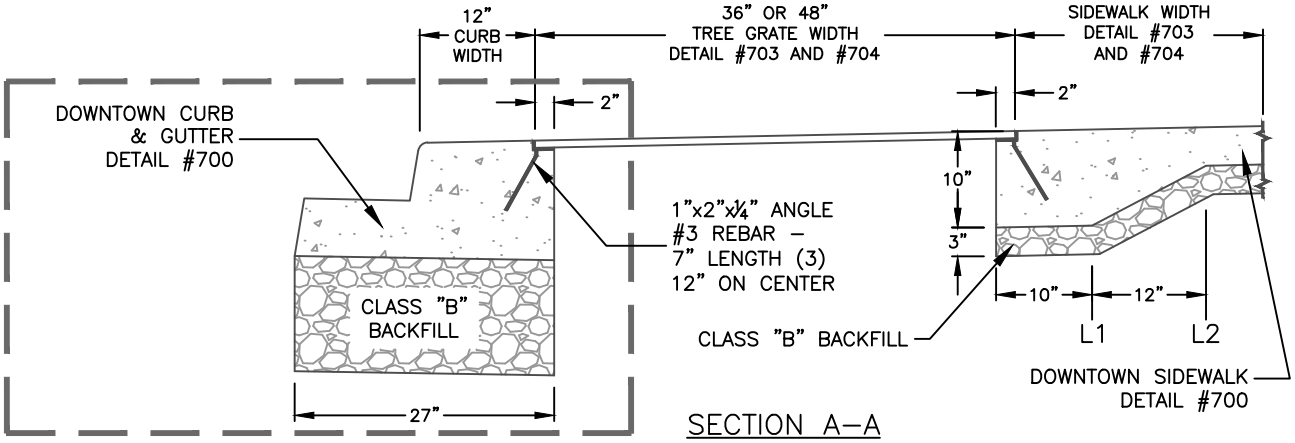

SECTION A–A

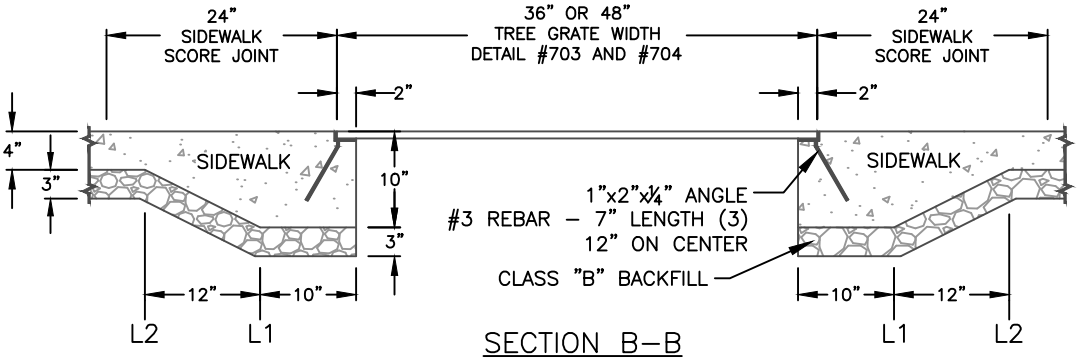

SECTION B–B

CONSTRUCTION NOTES

1. CONCRETE SHALL BE 3300 PSI AT 28 DAYS WITH A SLUMP RANGE OF 2" TO 4".
2. BASE ROCK SHALL BE CLASS "B" BACKFILL COMPACTED TO 95% MAXIMUM DENSITY PER AASHTO T–180.
3. ALL CONCRETE SURFACES SHALL BE LIGHTLY BROOMED.

CITY OF MILWAUKIE, OREGON – PUBLIC WORKS DEPT.

Street Tree Grate

DRAWING NO. 708

APPROVED Gary Parkin 12/12

CITY ENGINEER DATE

NO.	REVISIONS	DATE	BY
1	NEW DRAWING	10/09	ZJW

DEC 2012

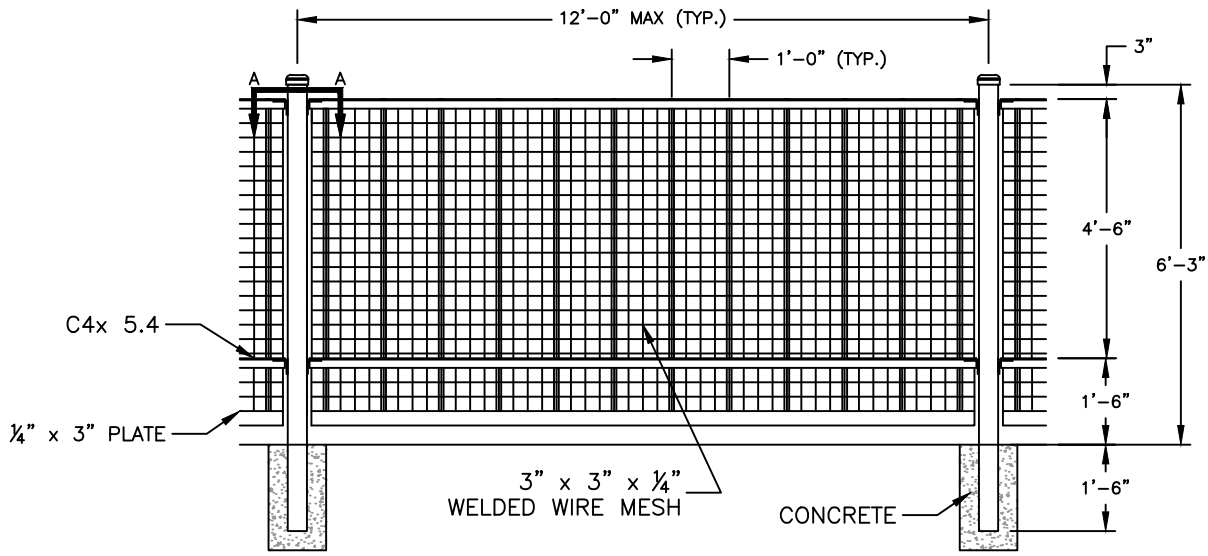

ELEVATION
TYPICAL ORNAMENTAL PANEL

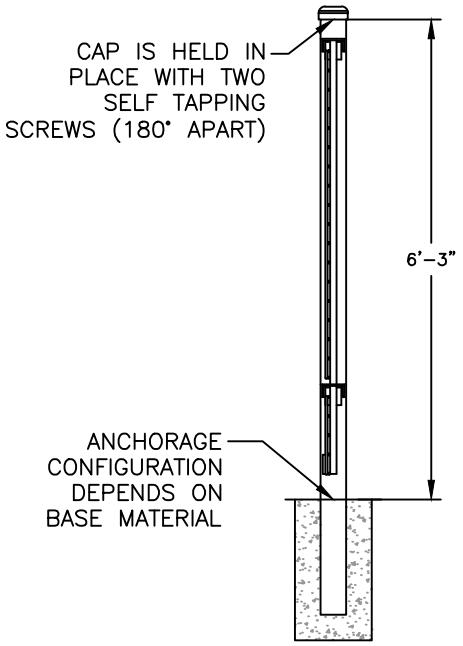

SECTION

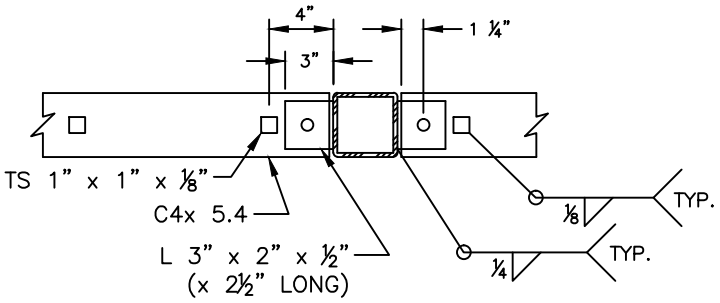

SECTION A–A

NOTES:

1. SLOPE OF PANELS MAY VARY. PROVIDE 3/16" LONG FLARE BEVEL GROOVE WELDS @ 2'-0" EACH WAY TO 1" SQUARE TUBES.
2. PROVIDE MINIMUM OF 2 WELDS IN MESH BELOW BOTTOM C4 x 5.4.
3. WIRE MESH TO BE PARALLEL WITH VERTICAL BARS. PLACE THE WELD WIRE MESH ON THE OUTSIDE FACE OF THE FENCE.
4. MAXIMUM GAP BETWEEN WIRE MESH AND EDGE MEMBERS SHALL NOT EXCEED ¼".
5. FENCE MATERIAL, POSTS, AND BRACKETS SHALL BE POWDER COATED BLACK PRIOR TO FINAL INSTALLATION ON–SITE.

CITY OF MILWAUKIE, OREGON – PUBLIC WORKS DEPT.

Decorative Fence

DRAWING NO. 709

APPROVED Gary Parkin 12/12
CITY ENGINEER DATE

NO.	REVISIONS	DATE	BY
1	NEW DRAWING	10/09	ZJW

DEC 2012

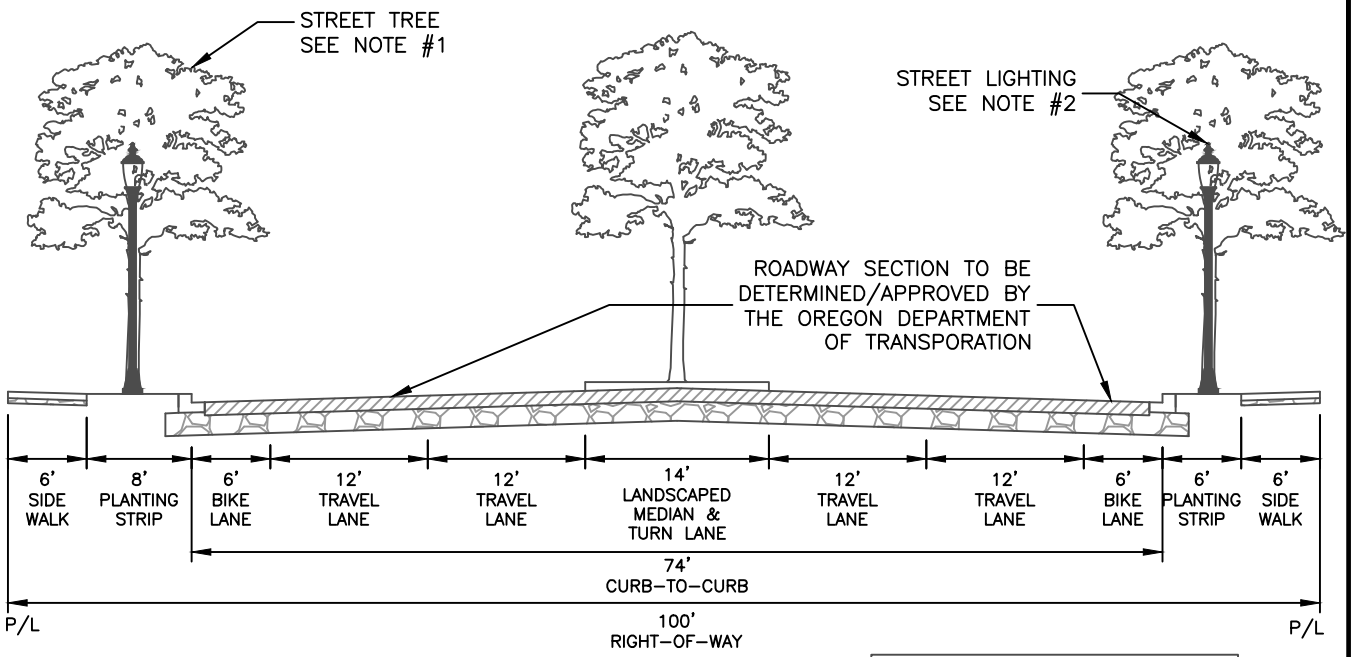

The City is in continual long range planning. These standards represent the best current plans but the City reserves the right to modify the plans.

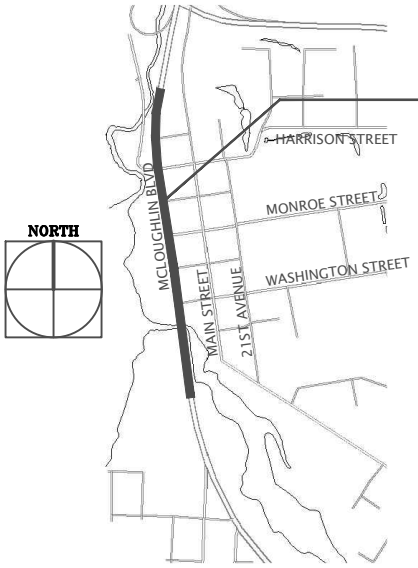

MCLOUGHLIN BOULEVARD

- NEW STREET TO RAILROAD TRESTLE.
- UNDERGROUND ALL UTILITIES.
- FOR STREET FURNITURE, SEE SECTION 5.0191(E) OF THE MILWAUKIE PUBLIC WORK STANDARDS.
- FOR BICYCLE FACILITIES, SEE SECTION 5.0191(F) OF THE MILWAUKIE PUBLIC WORK STANDARDS.

CONSTRUCTION NOTES

1. STREET TREES SHALL BE ACER RUBRUM 'SUNSET RED MAPLE.' STREET TREES WITHIN LANSCAPED MEDIAN SHALL BE CARPINUS BETULUS 'FRANS FONTAINE HORNBEAM.' BOTH TREE TYPES REQUIRE A MINIMUM 2" CALIPER AT TIME OF PLANTING.
2. STREET LIGHTING SHALL BE POWDERCOAT BLACK SINGLE ORNAMENTAL LIGHTS IN ACCORDANCE WITH SECTION 5.0091 OF THE MILWAUKIE PUBLIC WORKS STANDARDS.

MILWAUKIE, OREGON · FOUNDED 1847

CITY OF MILWAUKIE, OREGON – PUBLIC WORKS DEPT.

McLoughlin Boulevard Cross Section

DRAWING NO. 710

APPROVED Gary Parkin 12/12
CITY ENGINEER DATE

NO.	REVISIONS	DATE	BY
1	NEW DRAWING	10/09	ZJW
2	CHANGE TO MATCH SOUTH DOWNTOWN PLAN	12/11	ZJW

DEC 2012

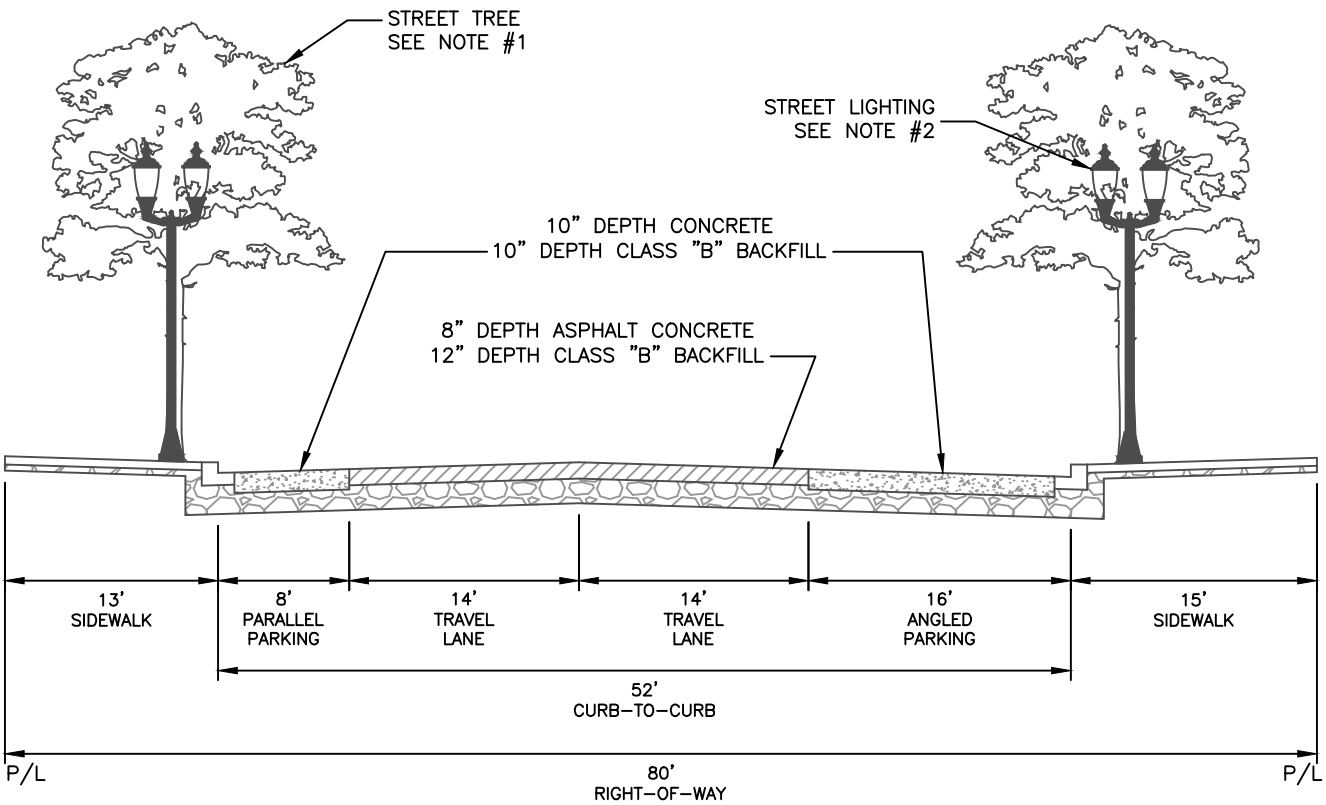

The City is in continual long range planning. These standards represent the best current plans but the City reserves the right to modify the plans.

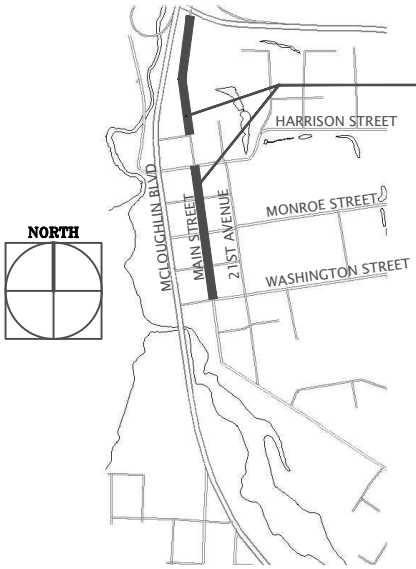

MAIN STREET

- HIGHWAY 224 TO NEW STREET AND HARRISON STREET TO WASHINGTON STREET
- UNDERGROUND ALL UTILITIES.
- FOR STREET FURNITURE, SEE SECTION 5.0191(E) OF THE MILWAUKIE PUBLIC WORK STANDARDS.
- FOR BICYCLE FACILITIES, SEE SECTION 5.0191(F) OF THE MILWAUKIE PUBLIC WORK STANDARDS.

CONSTRUCTION NOTES

1. STREET TREES SHALL BE ACER RUBRUM 'SUNSET RED MAPLE' WITH A MINIMUM 2" CALIPER AT TIME OF PLANTING.
2. STREET LIGHTING SHALL BE POWDERCOAT BLACK TWIN ORNAMENTAL LIGHTS IN ACCORDANCE WITH SECTION 5.0091 OF THE MILWAUKIE PUBLIC WORK STANDARDS.
3. CONCRETE FOR PARKING AREAS SHALL BE 4000 PSI AT 28 DAYS WITH A SLUMP RANGE OF 2" TO 4".

MILWAUKIE, OREGON FOUNDED 1847

CITY OF MILWAUKIE, OREGON – PUBLIC WORKS DEPT.

Main Street Cross Section

DRAWING NO. 711A

APPROVED Gary Parkin 12/12
CITY ENGINEER DATE

NO.	REVISIONS	DATE	BY
1	NEW DRAWING	10/09	ZJW
2	CHANGE TO MATCH SOUTH DOWNTOWN PLAN	12/11	ZJW

DEC 2012

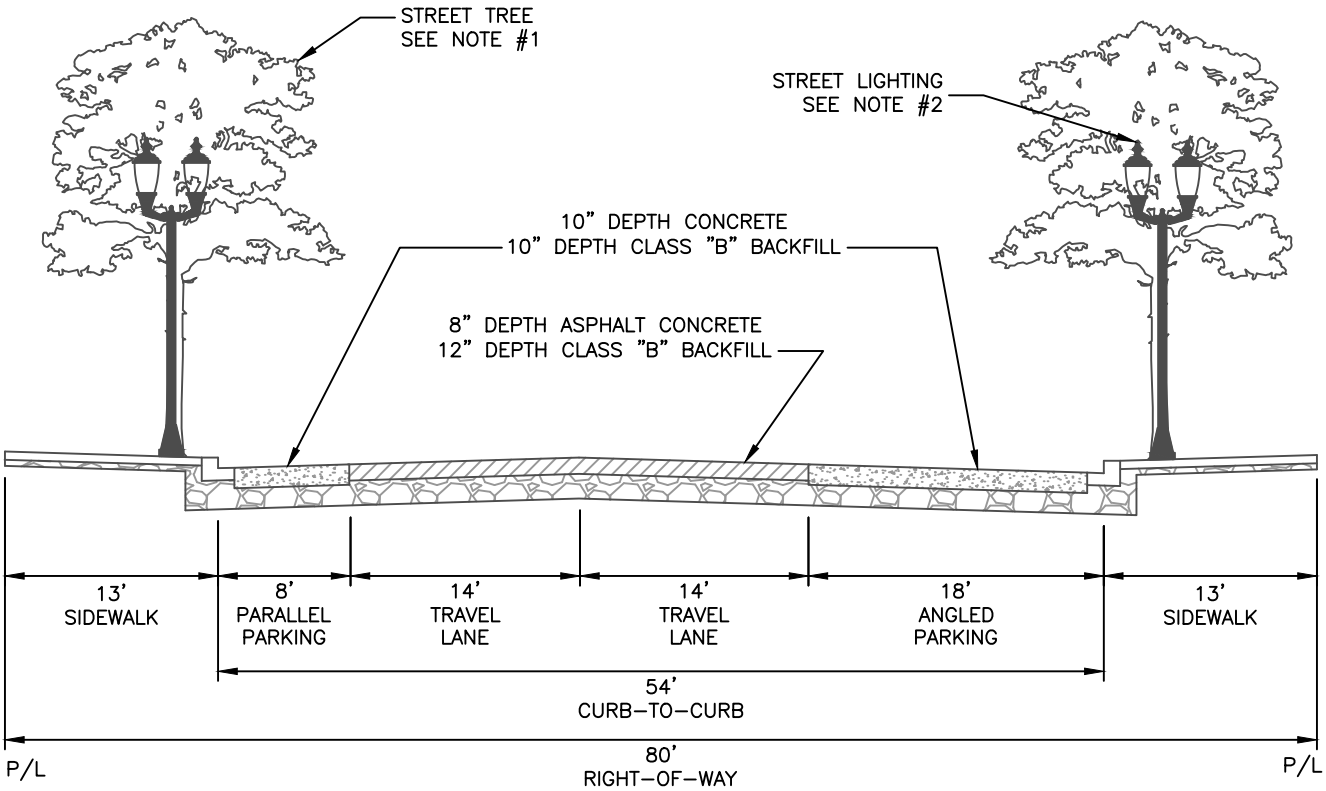

The City is in continual long range planning. These standards represent the best current plans but the City reserves the right to modify the plans.

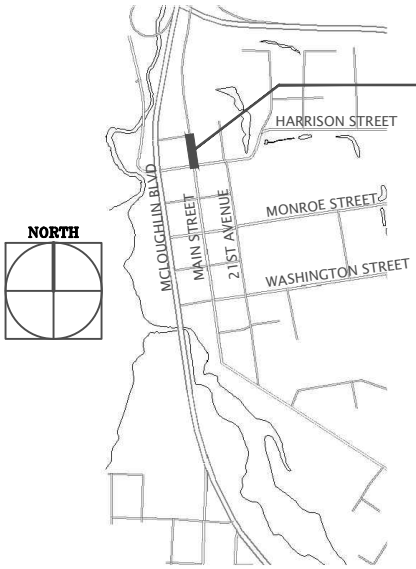

MAIN STREET

- NEW STREET TO HARRISON STREET.
- UNDERGROUND ALL UTILITIES.
- FOR STREET FURNITURE, SEE SECTION 5.0191(E) OF THE MILWAUKIE PUBLIC WORKS STANDARDS.
- FOR BICYCLE FACILITIES, SEE SECTION 5.0191(F) OF THE MILWAUKIE PUBLIC WORKS STANDARDS.

CONSTRUCTION NOTES

1. STREET TREES SHALL BE ACER RUBRUM 'SUNSET RED MAPLE' WITH A MINIMUM 2" CALIPER AT TIME OF PLANTING.
2. STREET LIGHTING SHALL BE POWDERCOAT BLACK TWIN ORNAMENTAL LIGHTS IN ACCORDANCE WITH SECTION 5.0091 OF THE MILWAUKIE PUBLIC WORKS STANDARDS.
3. CONCRETE FOR PARKING AREAS SHALL BE 4000 PSI AT 28 DAYS WITH A SLUMP RANGE OF 2" TO 4".

MILWAUKIE, OREGON · FOUNDED 1847

CITY OF MILWAUKIE, OREGON – PUBLIC WORKS DEPT.

Main Street Cross Section

DRAWING NO. 711B

APPROVED Gary Parkin 12/12
CITY ENGINEER DATE

NO.	REVISIONS	DATE	BY
1	NEW DRAWING	10/09	ZJW

DEC 2012

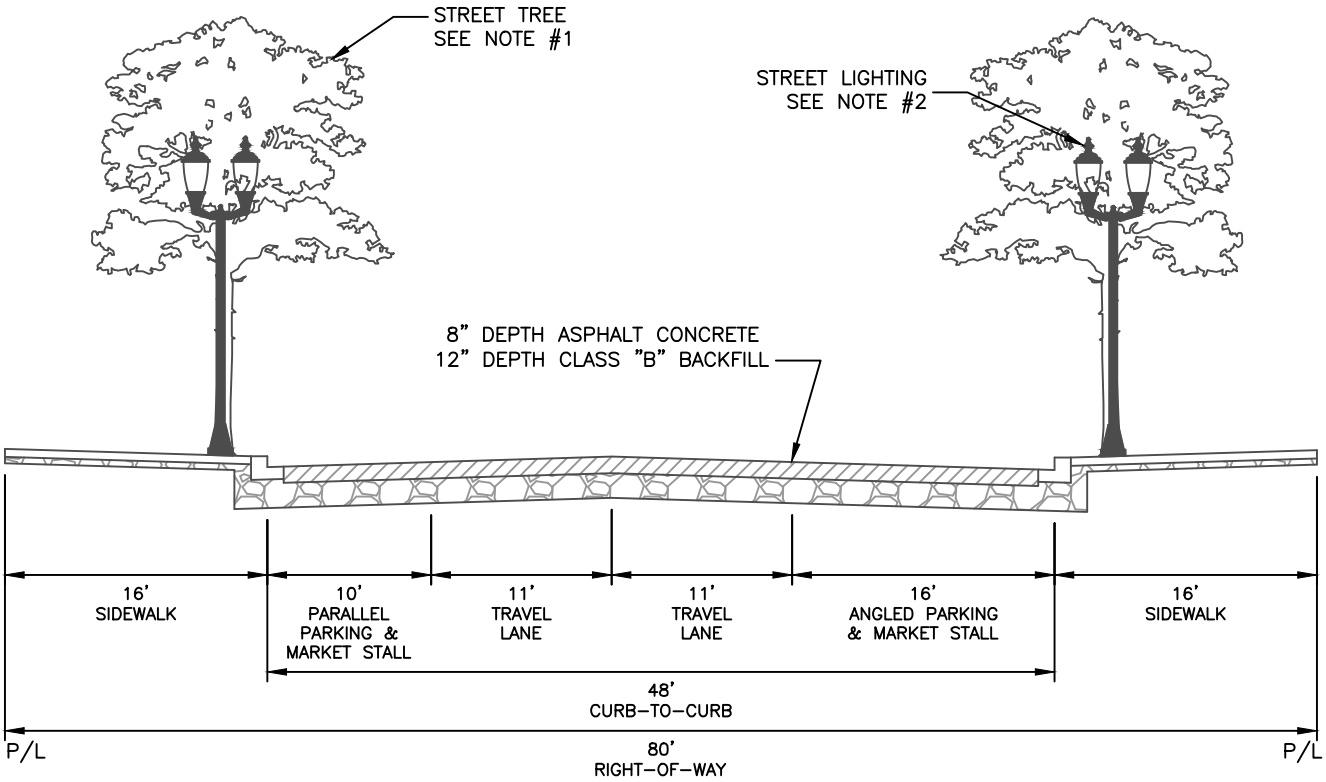

The City is in continual long range planning. These standards represent the best current plans but the City reserves the right to modify the plans.

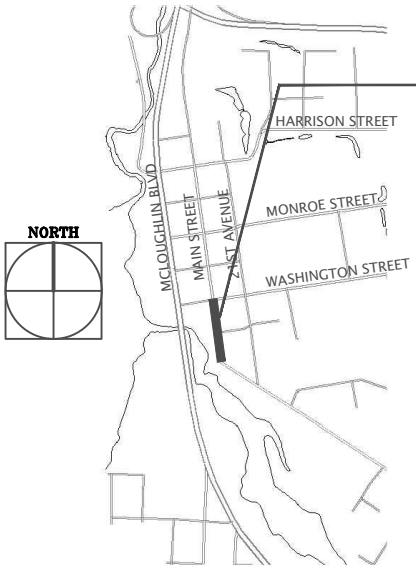

MAIN STREET

- WASHINGTON STREET TO SOUTH CORNER
- UNDERGROUND ALL UTILITIES.
- FOR STREET FURNITURE, SEE SECTION 5.0191(E) OF THE MILWAUKIE PUBLIC WORK STANDARDS.
- FOR BICYCLE FACILITIES, SEE SECTION 5.0191(F) OF THE MILWAUKIE PUBLIC WORK STANDARDS.

CONSTRUCTION NOTES

1. STREET TREES SHALL BE ACER RUBRUM 'SUNSET RED MAPLE' WITH A MINIMUM 2" CALIPER AT TIME OF PLANTING.
2. STREET LIGHTING SHALL BE POWDERCOAT BLACK TWIN ORNAMENTAL LIGHTS IN ACCORDANCE WITH SECTION 5.0091 OF THE MILWAUKIE PUBLIC WORK STANDARDS.
3. CONCRETE FOR PARKING AREAS SHALL BE 4000 PSI AT 28 DAYS WITH A SLUMP RANGE OF 2" TO 4".

MILWAUKIE, OREGON · FOUNDED 1847

CITY OF MILWAUKIE, OREGON – PUBLIC WORKS DEPT.

Main Street Cross Section

DRAWING NO. 711C

APPROVED Gary Parkin 12/12

CITY ENGINEER DATE

NO.	REVISIONS	DATE	BY
1	NEW DRAWING	12/11	ZJW

DEC 2012

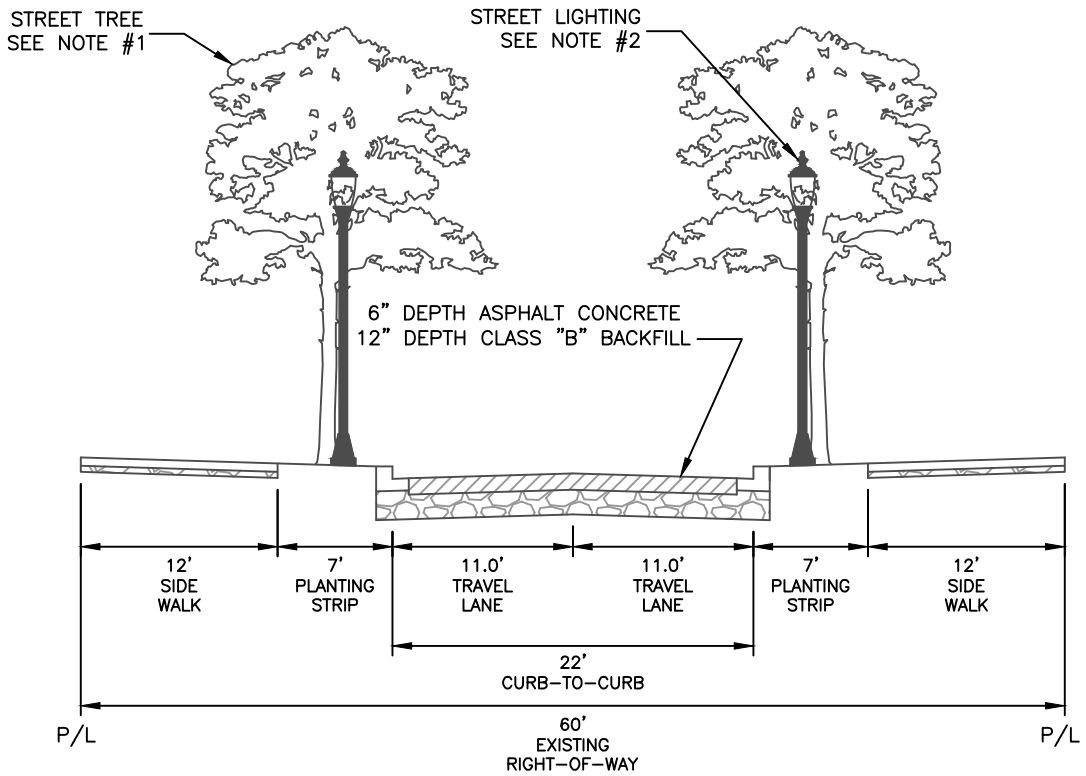

The City is in continual long range planning. These standards represent the best current plans but the City reserves the right to modify the plans.

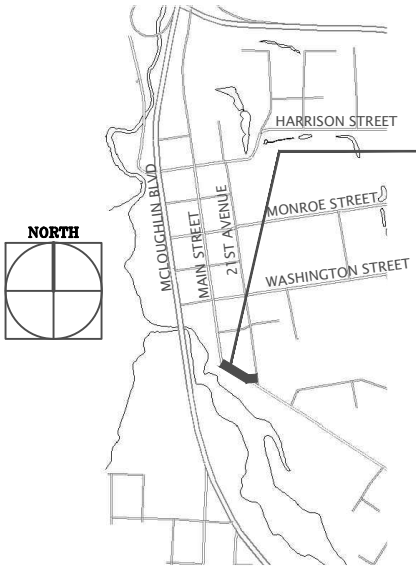

MAIN STREET

- ADAMS STREET TO 21ST AVENUE.
- UNDERGROUND ALL UTILITIES.
- FOR STREET FURNITURE, SEE SECTION 5.0191(E) OF THE MILWAUKIE PUBLIC WORKS STANDARDS.
- FOR BICYCLE FACILITIES, SEE SECTION 5.0191(F) OF THE MILWAUKIE PUBLIC WORKS STANDARDS.

CONSTRUCTION NOTES

1. STREET TREES SHALL BE ULMUS JAPONICA x WILSONIANA MORTON 'ACCOLADE ELM' WITH A MINIMUM 2" CALIPER AT TIME OF PLANTING.
2. STREET LIGHTING SHALL BE POWDERCOAT BLACK SINGLE ORNAMENTAL LIGHTS IN ACCORDANCE WITH SECTION 5.0091 OF THE MILWAUKIE PUBLIC WORKS STANDARDS.

MILWAUKIE, OREGON · FOUNDED 1847

CITY OF MILWAUKIE, OREGON – PUBLIC WORKS DEPT.

Main Street Cross Section

DRAWING NO. 711D

APPROVED Gary Parkin 12/12

CITY ENGINEER DATE

NO.	REVISIONS	DATE	BY
1	NEW DRAWING	12/11	ZJW

DEC 2012

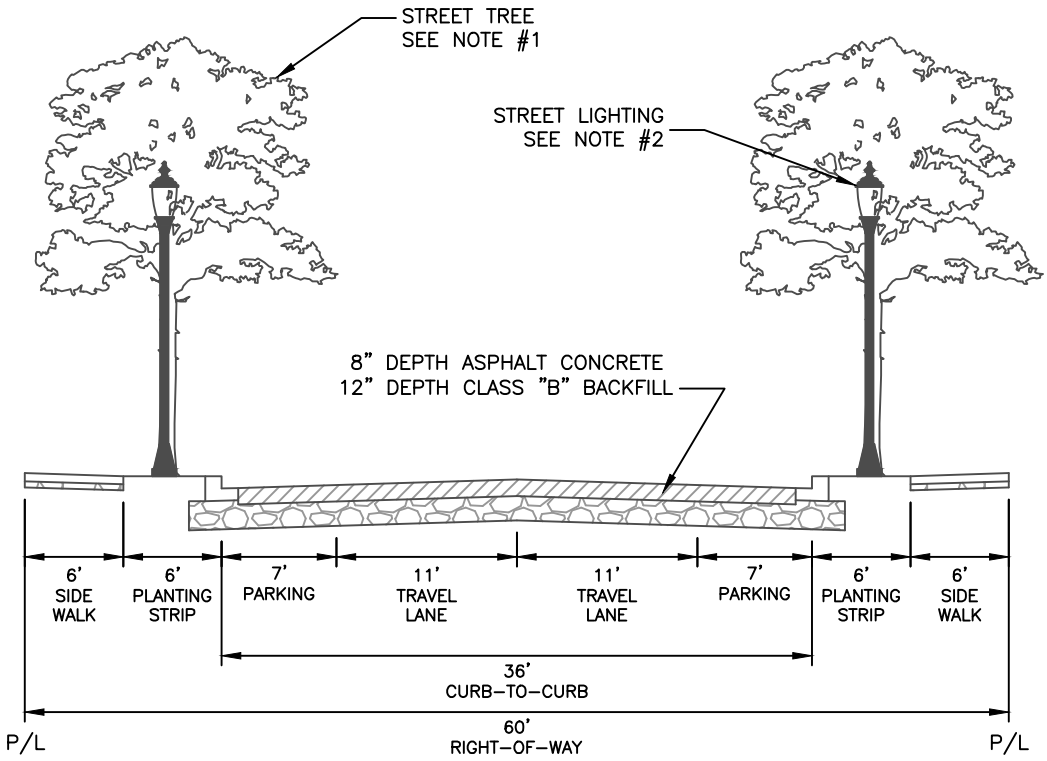

The City is in continual long range planning. These standards represent the best current plans but the City reserves the right to modify the plans.

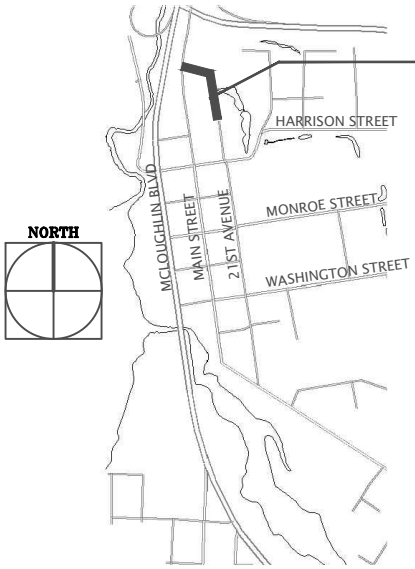

21ST AVENUE EXTENSION

- MAIN STREET TO SCOTT PARK.
- UNDERGROUND ALL UTILITIES.
- FOR STREET FURNITURE, SEE SECTION 5.0191(E) OF THE MILWAUKIE PUBLIC WORKS STANDARDS.
- FOR BICYCLE FACILITIES, SEE SECTION 5.0191(F) OF THE MILWAUKIE PUBLIC WORKS STANDARDS.

CONSTRUCTION NOTES

1. STREET TREES:

   NORTH–SOUTH SEGMENT: STREET TREES SHALL BE ACER RUBRUM 'SUNSET RED MAPLE' WITH A MINIMUM 2" CALIPER AT TIME OF PLANTING.

   EAST–WEST SEGMENT: STREET TREES SHALL BE EITHER GLEDITSIA TRIACANTHOS 'SKYLINE HONEYLOCUST' OR PYRUS CALLERYANA 'CHANTICLEER PEAR' WITH A MINIMUM 2" CALIPER AT TIME OF PLANTING.

2. STREET LIGHTING SHALL BE POWDERCOAT BLACK SINGLE ORNAMENTAL LIGHTS IN ACCORDANCE WITH SECTION 5.0091 OF THE MILWAUKIE PUBLIC WORKS STANDARDS.

MILWAUKIE, OREGON · FOUNDED 1847

CITY OF MILWAUKIE, OREGON – PUBLIC WORKS DEPT.

21st Avenue Cross Section

DRAWING NO. 712A

APPROVED Gary Parkin 12/12

CITY ENGINEER DATE

NO.	REVISIONS	DATE	BY
1	NEW DRAWING	10/09	ZJW

DEC 2012

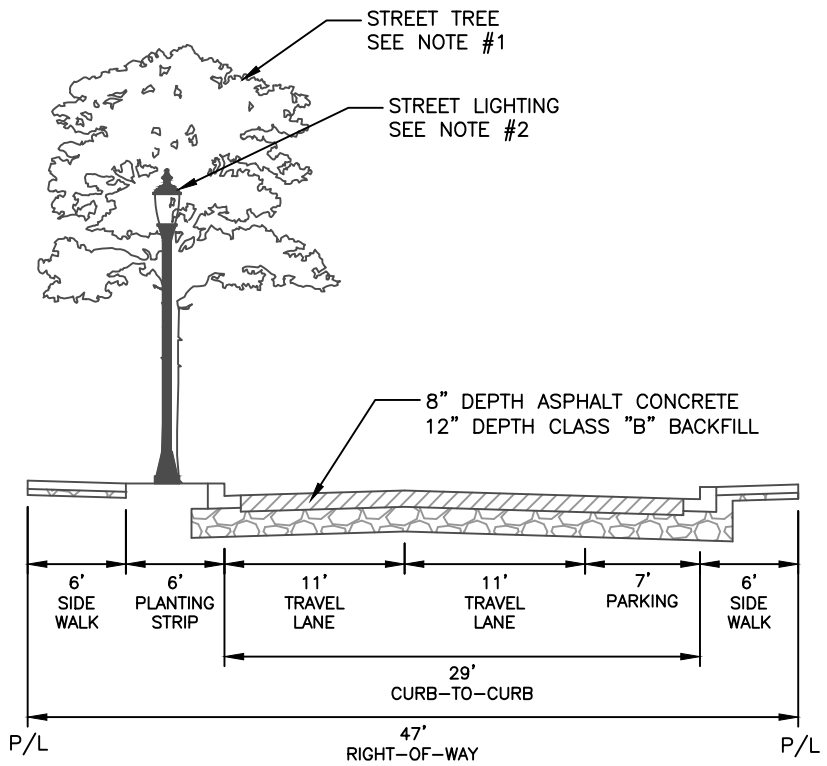

The City is in continual long range planning. These standards represent the best current plans but the City reserves the right to modify the plans.

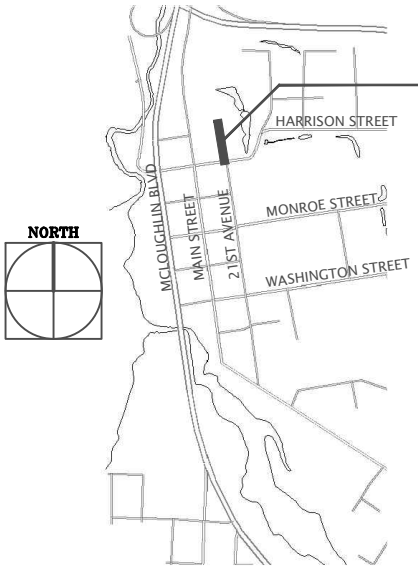

21ST AVENUE EXTENSION

- SCOTT PARK TO HARRISON STREET.
- UNDERGROUND ALL UTILITIES.
- FOR STREET FURNITURE, SEE SECTION 5.0191(E) OF THE MILWAUKIE PUBLIC WORKS STANDARDS.
- FOR BICYCLE FACILITIES, SEE SECTION 5.0191(F) OF THE MILWAUKIE PUBLIC WORKS STANDARDS.

CONSTRUCTION NOTES

1. STREET TREES SHALL BE ACER RUBRUM 'SUNSET RED MAPLE' WITH A MINIMUM 2" CALIPER AT TIME OF PLANTING.
2. STREET LIGHTING SHALL BE POWDERCOAT BLACK SINGLE ORNAMENTAL LIGHTS IN ACCORDANCE WITH SECTION 5.0091 OF THE MILWAUKIE PUBLIC WORKS STANDARDS.

MILWAUKIE, OREGON · FOUNDED 1847

CITY OF MILWAUKIE, OREGON – PUBLIC WORKS DEPT.

21st Avenue Cross Section

DRAWING NO. 712B

APPROVED Gary Parkin 12/12
CITY ENGINEER DATE

NO.	REVISIONS	DATE	BY
1	NEW DRAWING	10/09	ZJW

DEC 2012

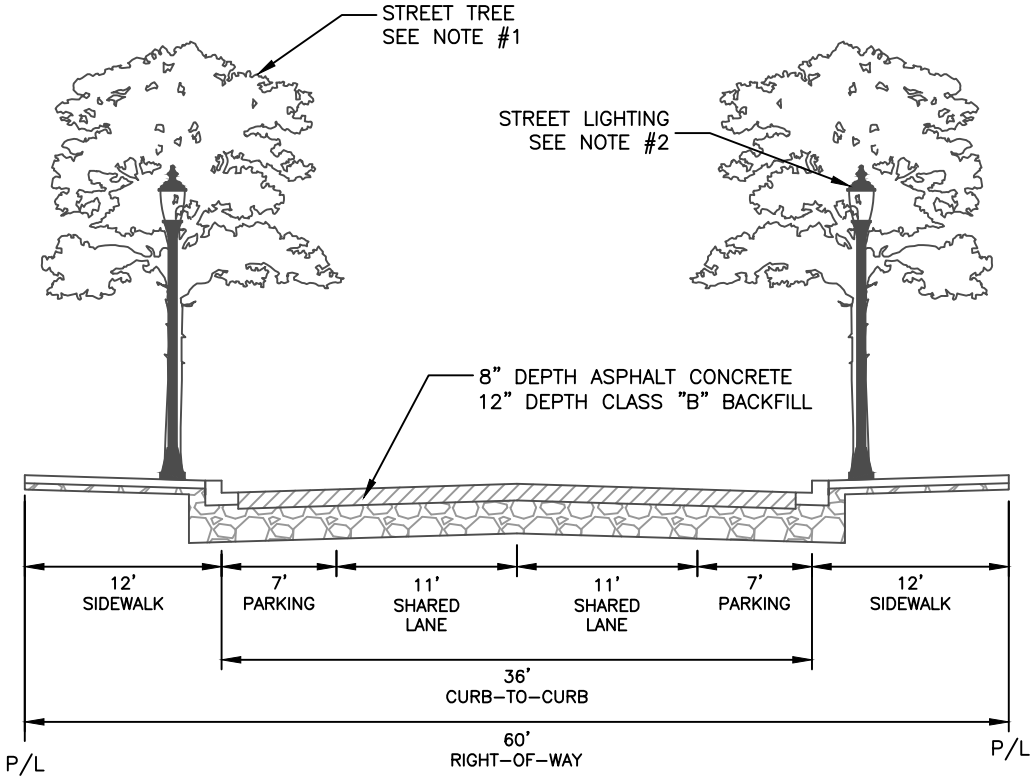

The City is in continual long range planning. These standards represent the best current plans but the City reserves the right to modify the plans.

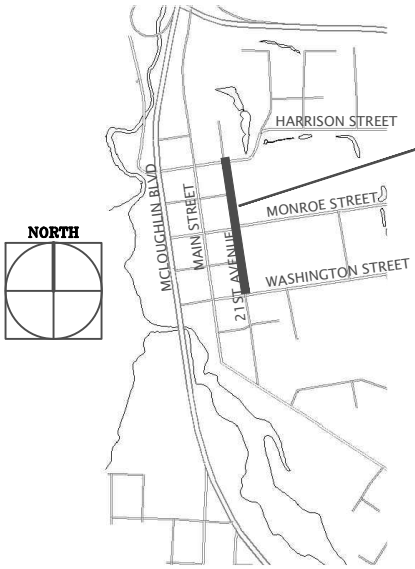

21st AVENUE

- HARRISON STREET TO WASHINGTON STREET.
- UNDERGROUND ALL UTILITIES.
- FOR STREET FURNITURE, SEE SECTION 5.0191(E) OF THE MILWAUKIE PUBLIC WORKS STANDARDS.
- FOR BICYCLE FACILITIES, SEE SECTION 5.0191(F) OF THE MILWAUKIE PUBLIC WORKS STANDARDS.
- BIKE POSITION WITHIN THE SHARED LANE SHALL BE INDICATED WITH SHARED LANE MARKINGS IN ACCORDANCE WITH THE MUTCD.

CONSTRUCTION NOTES

1. STREET TREES SHALL BE ACER RUBRUM 'SUNSET RED MAPLE' WITH A MINIMUM 2" CALIPER AT TIME OF PLANTING.
2. STREET LIGHTING SHALL BE POWDERCOAT BLACK SINGLE ORNAMENTAL LIGHTS IN ACCORDANCE WITH SECTION 5.0091 OF THE MILWAUKIE PUBLIC WORKS STANDARDS.

CITY OF MILWAUKIE, OREGON – PUBLIC WORKS DEPT.

21st Avenue Cross Section

DRAWING NO. 712C

APPROVED Gary Parkin 12/12

CITY ENGINEER DATE

NO.	REVISIONS	DATE	BY
1	NEW DRAWING	03/10	JLR
2	CHANGE TO MATCH SOUTH DOWNTOWN PLAN	12/11	ZJW

DEC 2012

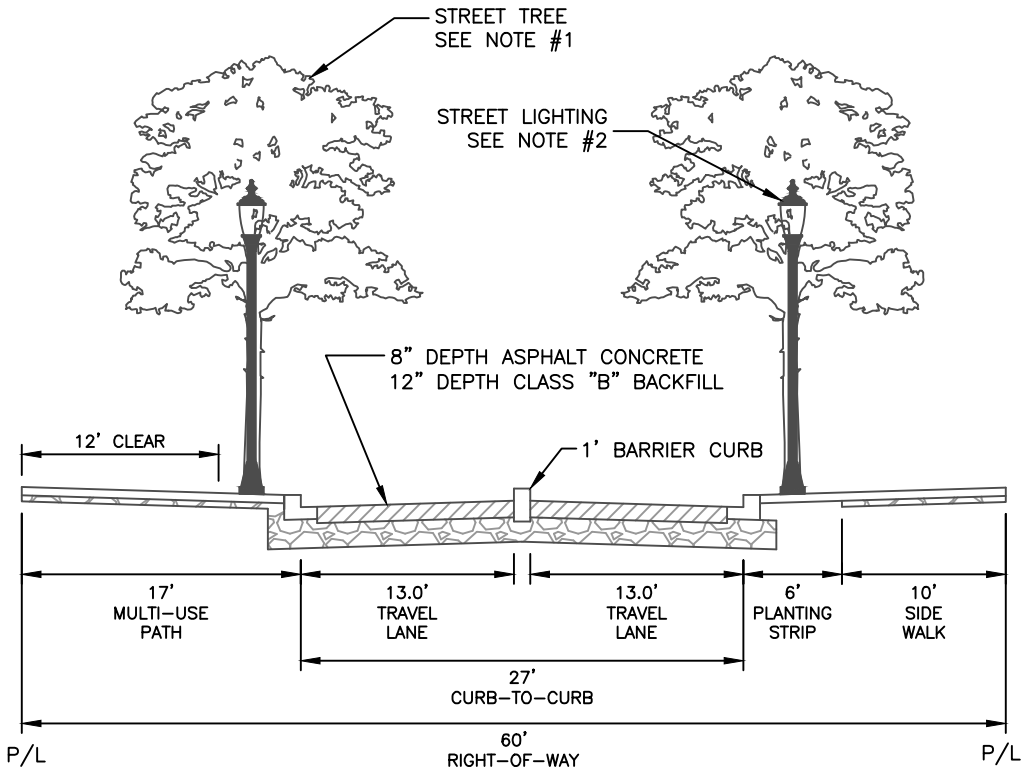

The City is in continual long range planning. These standards represent the best current plans but the City reserves the right to modify the plans.

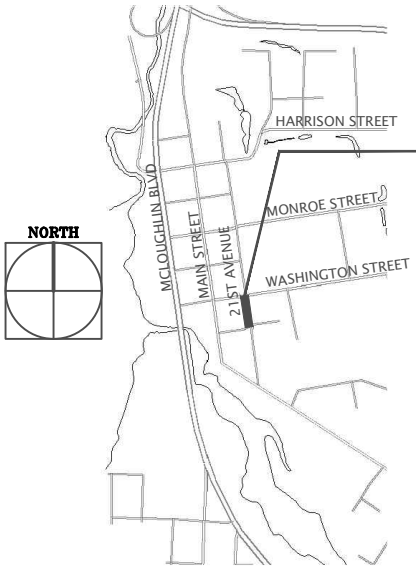

21ST AVENUE

- WASHINGTON STREET TO ADAMS STREET.
- UNDERGROUND ALL UTILITIES.
- FOR STREET FURNITURE, SEE SECTION 5.0191(E) OF THE MILWAUKIE PUBLIC WORKS STANDARDS.
- FOR BICYCLE FACILITIES, SEE SECTION 5.0191(F) OF THE MILWAUKIE PUBLIC WORKS STANDARDS.

CONSTRUCTION NOTES

1. STREET TREES SHALL BE ACER RUBRUM 'SUNSET RED MAPLE' WITH A MINIMUM 2" CALIPER AT TIME OF PLANTING.
2. STREET LIGHTING SHALL BE POWDERCOAT BLACK SINGLE ORNAMENTAL LIGHTS IN ACCORDANCE WITH SECTION 5.0091 OF THE MILWAUKIE PUBLIC WORKS STANDARDS.

MILWAUKIE, OREGON · FOUNDED 1847

CITY OF MILWAUKIE, OREGON – PUBLIC WORKS DEPT.

21st Avenue Cross Section

DRAWING NO. 712D

APPROVED Gary Parkin 12/12

CITY ENGINEER DATE

NO.	REVISIONS	DATE	BY
1	NEW DRAWING	10/09	ZJW
2	CHANGE TO MATCH SOUTH DOWNTOWN PLAN	12/11	ZJW

DEC 2012

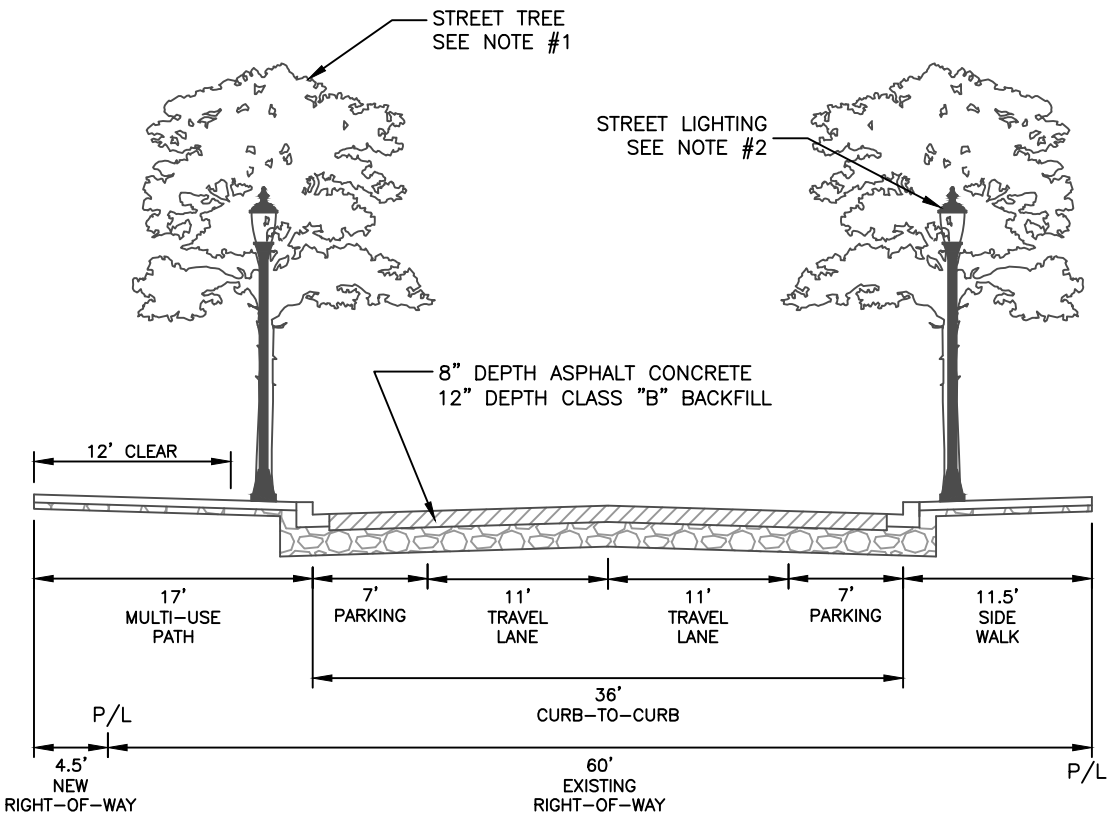

The City is in continual long range planning. These standards represent the best current plans but the City reserves the right to modify the plans.

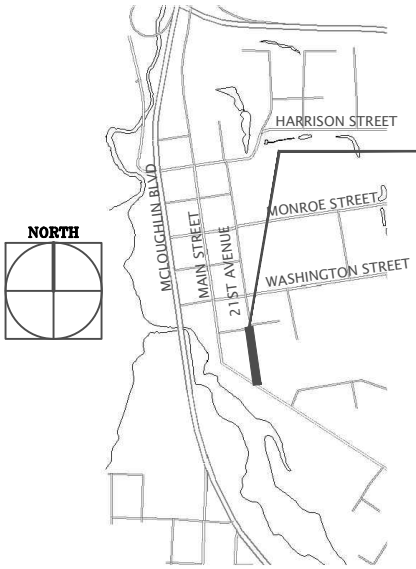

21ST AVENUE

- ADAMS STREET TO LAKE ROAD.
- UNDERGROUND ALL UTILITIES.
- FOR STREET FURNITURE, SEE SECTION 5.0191(E) OF THE MILWAUKIE PUBLIC WORKS STANDARDS.
- FOR BICYCLE FACILITIES, SEE SECTION 5.0191(F) OF THE MILWAUKIE PUBLIC WORKS STANDARDS.

CONSTRUCTION NOTES

1. STREET TREES SHALL BE ACER RUBRUM 'SUNSET RED MAPLE' WITH A MINIMUM 2" CALIPER AT TIME OF PLANTING.
2. STREET LIGHTING SHALL BE POWDERCOAT BLACK SINGLE ORNAMENTAL LIGHTS IN ACCORDANCE WITH SECTION 5.0091 OF THE MILWAUKIE PUBLIC WORKS STANDARDS.

MILWAUKIE, OREGON FOUNDED 1847

CITY OF MILWAUKIE, OREGON – PUBLIC WORKS DEPT.

21st Avenue Cross Section

DRAWING NO. 712E

APPROVED Gary Parkin 12/12

CITY ENGINEER DATE

NO.	REVISIONS	DATE	BY
1	NEW DRAWING	10/09	ZJW
2	CHANGE TO MATCH SOUTH DOWNTOWN PLAN	12/11	ZJW

DEC 2012

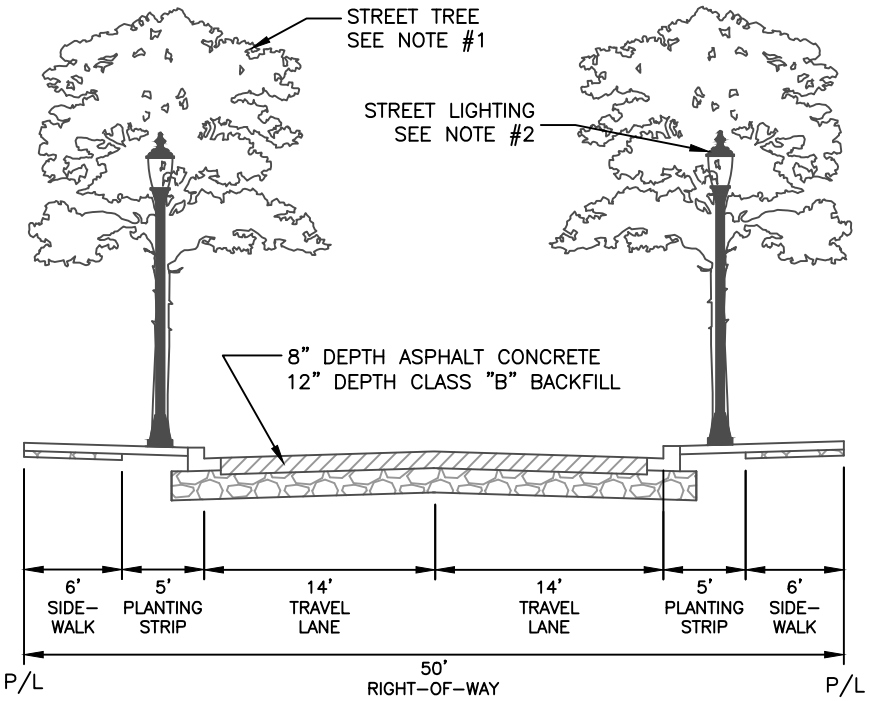

The City is in continual long range planning. These standards represent the best current plans but the City reserves the right to modify the plans.

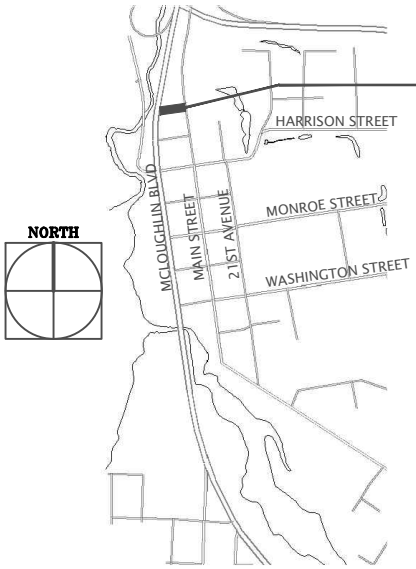

NEW STREET

- MCLOUGHLIN BOULEVARD TO MAIN STREET JUST NORTH OF THE N. MAIN REDEVELOPMENT SITE.
- UNDERGROUND ALL UTILITIES.
- FOR STREET FURNITURE, SEE SECTION 5.0191(E) OF THE MILWAUKIE PUBLIC WORKS STANDARDS.
- FOR BICYCLE FACILITIES, SEE SECTION 5.0191(F) OF THE MILWAUKIE PUBLIC WORKS STANDARDS.

CONSTRUCTION NOTES

1. STREET TREES SHALL BE EITHER GLEDITSIA TRIACANTHOS 'SKYLINE HONEYLOCUST' OR PYRUS CALLERYANA 'CHANTICLEER PEAR' WITH A MINIMUM 2" CALIPER AT TIME OF PLANTING.
2. STREET LIGHTING SHALL BE POWDERCOAT BLACK SINGLE ORNAMENTAL LIGHTS IN ACCORDANCE WITH SECTION 5.0091 OF THE MILWAUKIE PUBLIC WORKS STANDARDS.

MILWAUKIE, OREGON FOUNDED 1847

CITY OF MILWAUKIE, OREGON – PUBLIC WORKS DEPT.

New Street Cross Section

DRAWING NO. 713

APPROVED Gary Parkin 12/12

CITY ENGINEER DATE

NO.	REVISIONS	DATE	BY
1	NEW DRAWING	03/10	JLR

DEC 2012

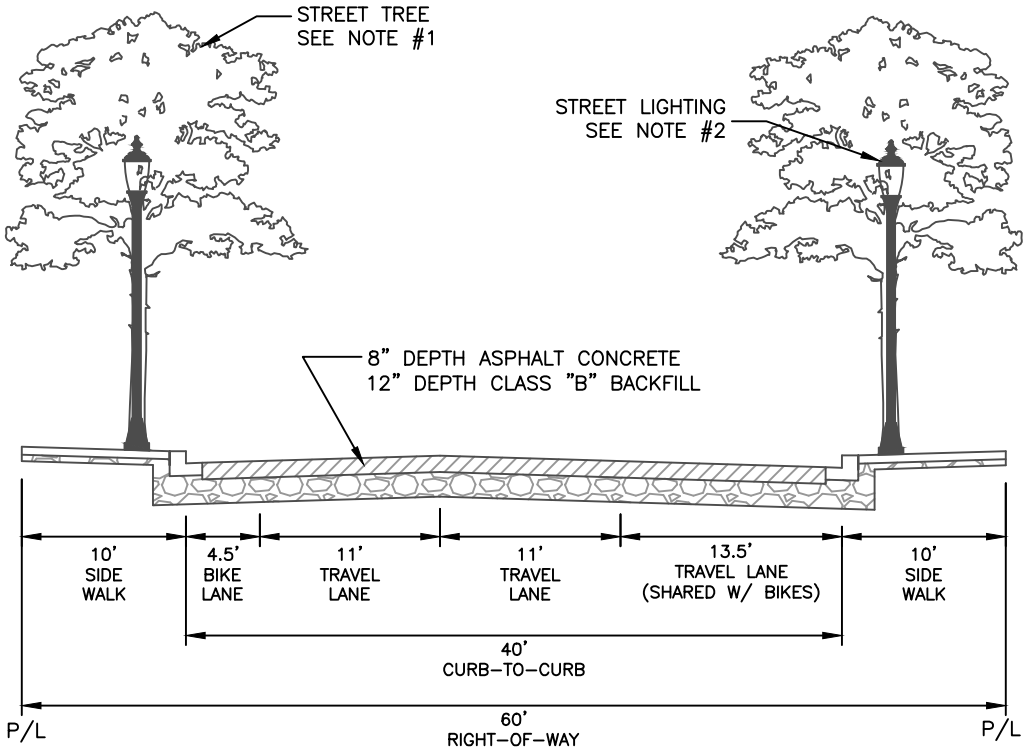

The City is in continual long range planning. These standards represent the best current plans but the City reserves the right to modify the plans.

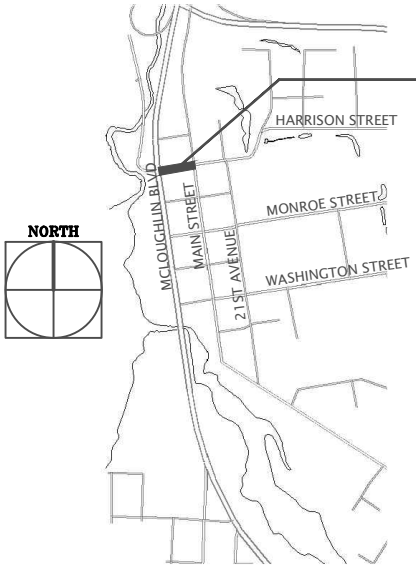

HARRISON STREET

- MCLOUGHLIN BOULEVARD TO MAIN STREET.
- UNDERGROUND ALL UTILITIES..
- FOR STREET FURNITURE, SEE SECTION 5.0191(E) OF THE MILWAUKIE PUBLIC WORKS STANDARDS.
- FOR BICYCLE FACILITIES, SEE SECTION 5.0191(F) OF THE MILWAUKIE PUBLIC WORKS STANDARDS.

CONSTRUCTION NOTES

1. STREET TREES SHALL BE EITHER GLEDITSIA TRIACANTHOS 'SKYLINE HONEYLOCUST' OR PYRUS CALLERYANA 'CHANTICLEER PEAR' WITH A MINIMUM 2" CALIPER AT TIME OF PLANTING.
2. STREET LIGHTING SHALL BE POWDERCOAT BLACK SINGLE ORNAMENTAL LIGHTS IN ACCORDANCE WITH SECTION 5.0091 OF THE MILWAUKIE PUBLIC WORKS STANDARDS.

CITY OF MILWAUKIE, OREGON – PUBLIC WORKS DEPT.

Harrison Street Cross Section

DRAWING NO. 714A

APPROVED Gary Parkin 12/12
CITY ENGINEER DATE

NO.	REVISIONS	DATE	BY
1	NEW DRAWING	10/09	ZJW

DEC 2012

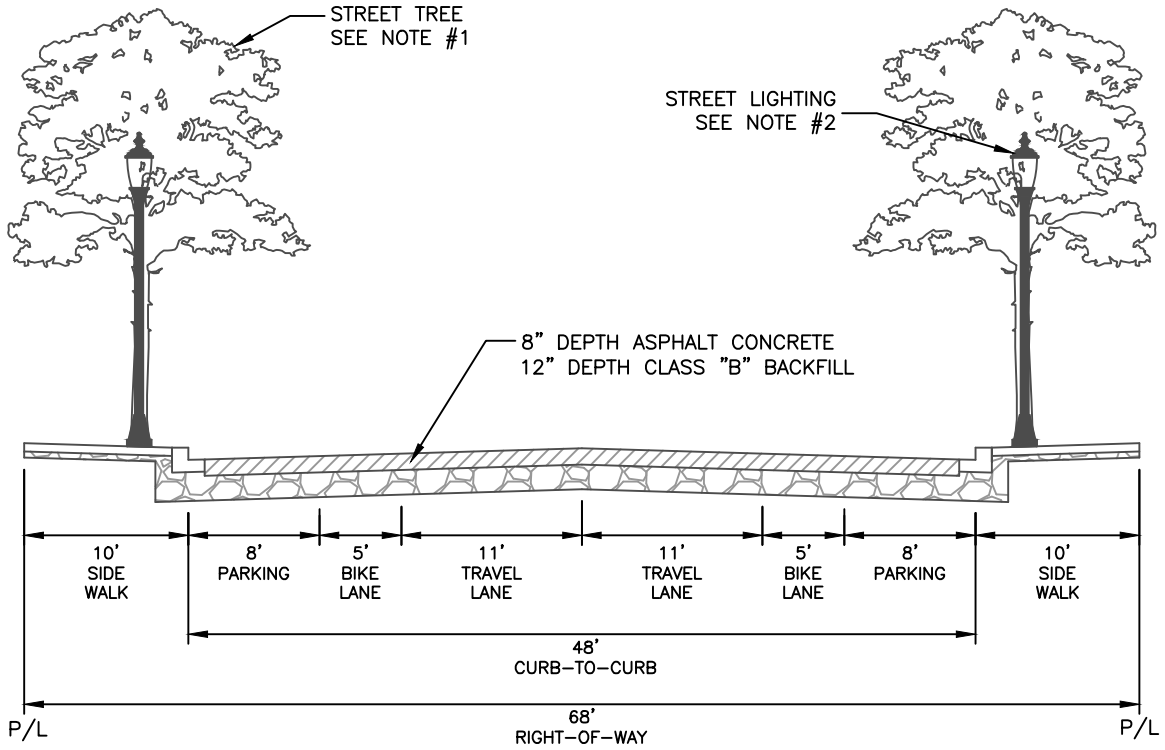

The City is in continual long range planning. These standards represent the best current plans but the City reserves the right to modify the plans.

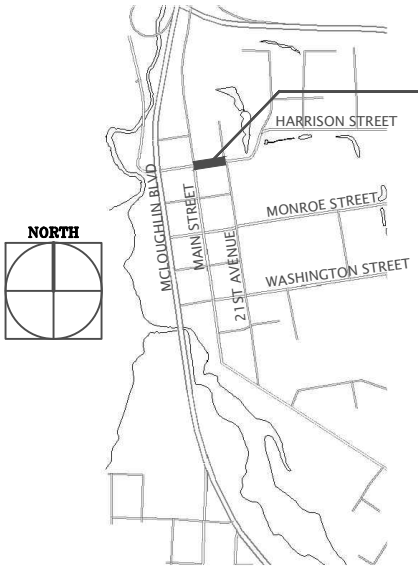

HARRISON STREET

- MAIN STREET TO 21ST AVENUE.
- UNDERGROUND ALL UTILITIES.
- FOR STREET FURNITURE, SEE SECTION 5.0191(E) OF THE MILWAUKIE PUBLIC WORKS STANDARDS.
- FOR BICYCLE FACILITIES, SEE SECTION 5.0191(F) OF THE MILWAUKIE PUBLIC WORKS STANDARDS.

CONSTRUCTION NOTES

1. STREET TREES SHALL BE ACER RUBRUM 'SUNSET RED MAPLE' WITH A MINIMUM 2" CALIPER AT TIME OF PLANTING.
2. STREET LIGHTING SHALL BE POWDERCOAT BLACK SINGLE ORNAMENTAL LIGHTS IN ACCORDANCE WITH SECTION 5.0091 OF THE MILWAUKIE PUBLIC WORKS STANDARDS.

MILWAUKIE, OREGON · FOUNDED 1847

CITY OF MILWAUKIE, OREGON – PUBLIC WORKS DEPT.

Harrison Street Cross Section

DRAWING NO. 714B

APPROVED Gary Parkin 12/12
CITY ENGINEER DATE

NO.	REVISIONS	DATE	BY
1	NEW DRAWING	10/09	ZJW

DEC 2012

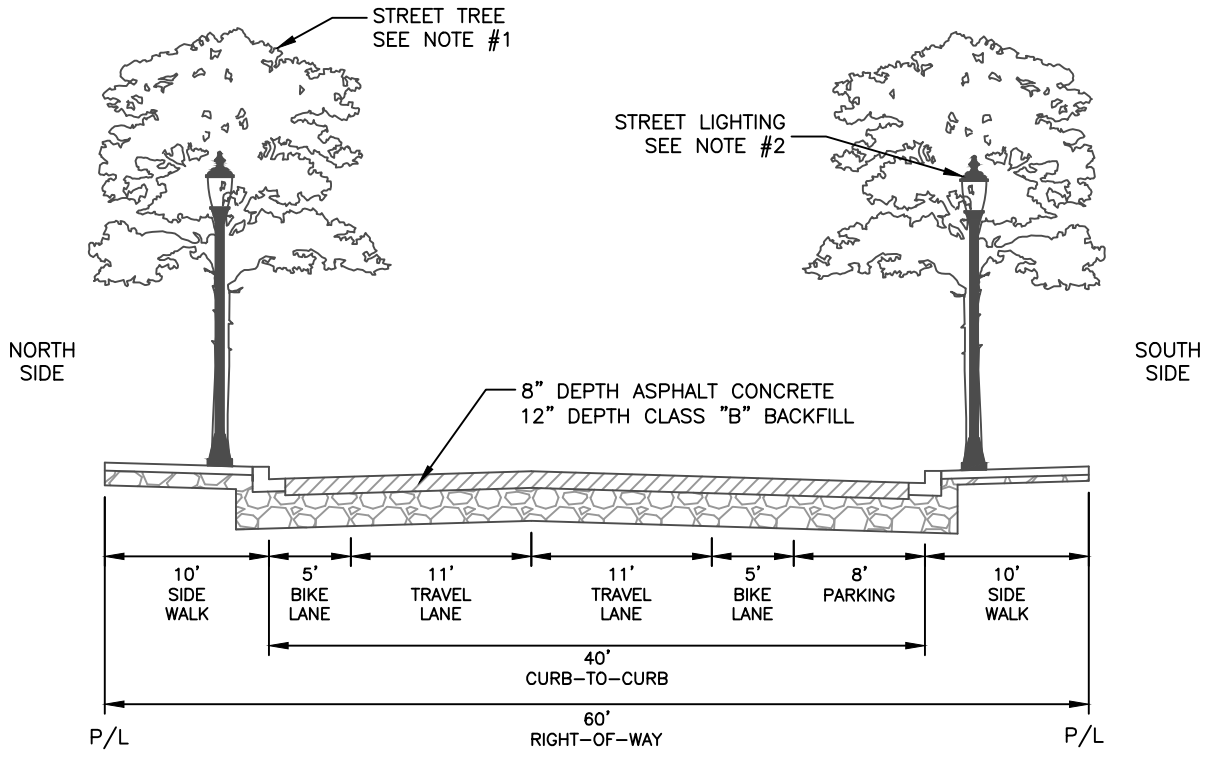

The City is in continual long range planning. These standards represent the best current plans but the City reserves the right to modify the plans.

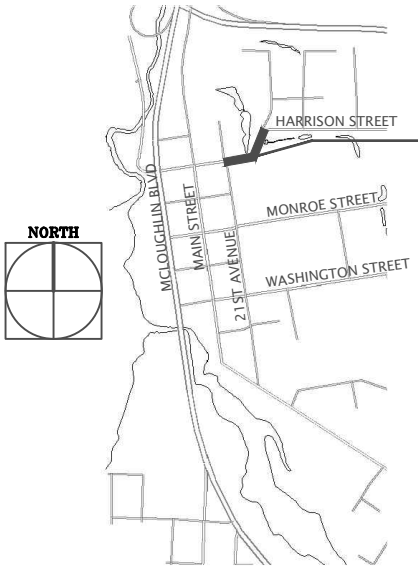

HARRISON STREET

- 21ST AVENUE TO 23RD AVENUE.
- UNDERGROUND ALL UTILITIES.
- FOR STREET FURNITURE, SEE SECTION 5.0191(E) OF THE MILWAUKIE PUBLIC WORKS STANDARDS.
- FOR BICYCLE FACILITIES, SEE SECTION 5.0191(F) OF THE MILWAUKIE PUBLIC WORKS STANDARDS.

CONSTRUCTION NOTES

1. STREET TREES SHALL BE ACER RUBRUM 'SUNSET RED MAPLE' WITH A MINIMUM 2" CALIPER AT TIME OF PLANTING.
2. STREET LIGHTING SHALL BE POWDERCOAT BLACK SINGLE ORNAMENTAL LIGHTS IN ACCORDANCE WITH SECTION 5.0091 OF THE MILWAUKIE PUBLIC WORKS STANDARDS.

MILWAUKIE, OREGON · FOUNDED 1847

CITY OF MILWAUKIE, OREGON – PUBLIC WORKS DEPT.

Harrison Street Cross Section

DRAWING NO. 714C

APPROVED Gary Parkin 12/12

CITY ENGINEER DATE

NO.	REVISIONS	DATE	BY
1	NEW DRAWING	03/10	JLR
2	MOVED PARKING TO OTHER SIDE	12/11	ZJW

DEC 2012

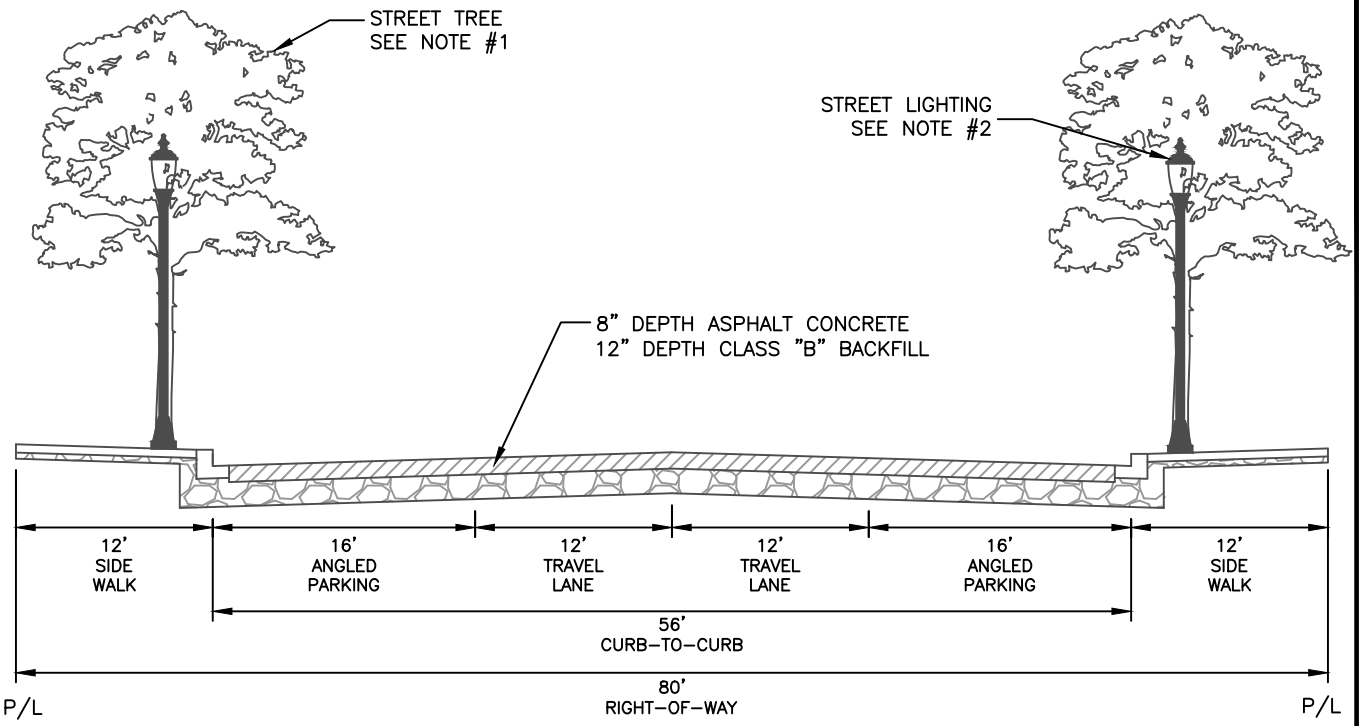

The City is in continual long range planning. These standards represent the best current plans but the City reserves the right to modify the plans.

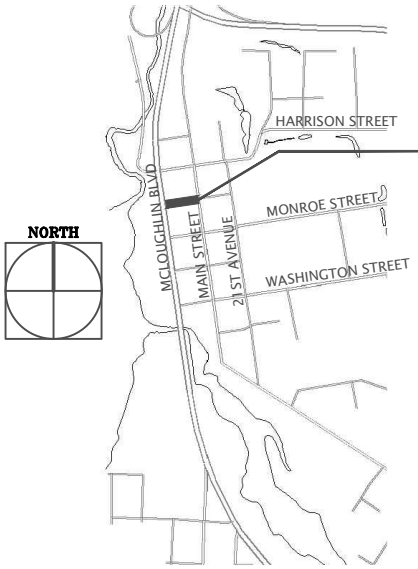

JACKSON STREET

- MCLOUGHLIN BOULEVARD TO MAIN STREET.
- UNDERGROUND ALL UTILITIES.
- FOR STREET FURNITURE, SEE SECTION 5.0191(E) OF THE MILWAUKIE PUBLIC WORKS STANDARDS.
- FOR BICYCLE FACILITIES, SEE SECTION 5.0191(F) OF THE MILWAUKIE PUBLIC WORKS STANDARDS.

CONSTRUCTION NOTES

1. STREET TREES SHALL BE EITHER GLEDITSIA TRIACANTHOS 'SKYLINE HONEYLOCUST' OR PYRUS CALLERYANA 'CHANTICLEER PEAR' WITH A MINIMUM 2" CALIPER AT TIME OF PLANTING.
2. STREET LIGHTING SHALL BE POWDERCOAT BLACK SINGLE ORNAMENTAL LIGHTS IN ACCORDANCE WITH SECTION 5.0091 OF THE MILWAUKIE PUBLIC WORKS STANDARDS.

MILWAUKIE, OREGON · FOUNDED 1847

CITY OF MILWAUKIE, OREGON – PUBLIC WORKS DEPT.

Jackson Street Cross Section

DRAWING NO. 715A

APPROVED Gary Parkin 12/12
CITY ENGINEER DATE

NO.	REVISIONS	DATE	BY
1	NEW DRAWING	10/09	ZJW
2	REMOVED PLANTER, ADDED ANGLED PARKING	12/11	ZJW

DEC 2012

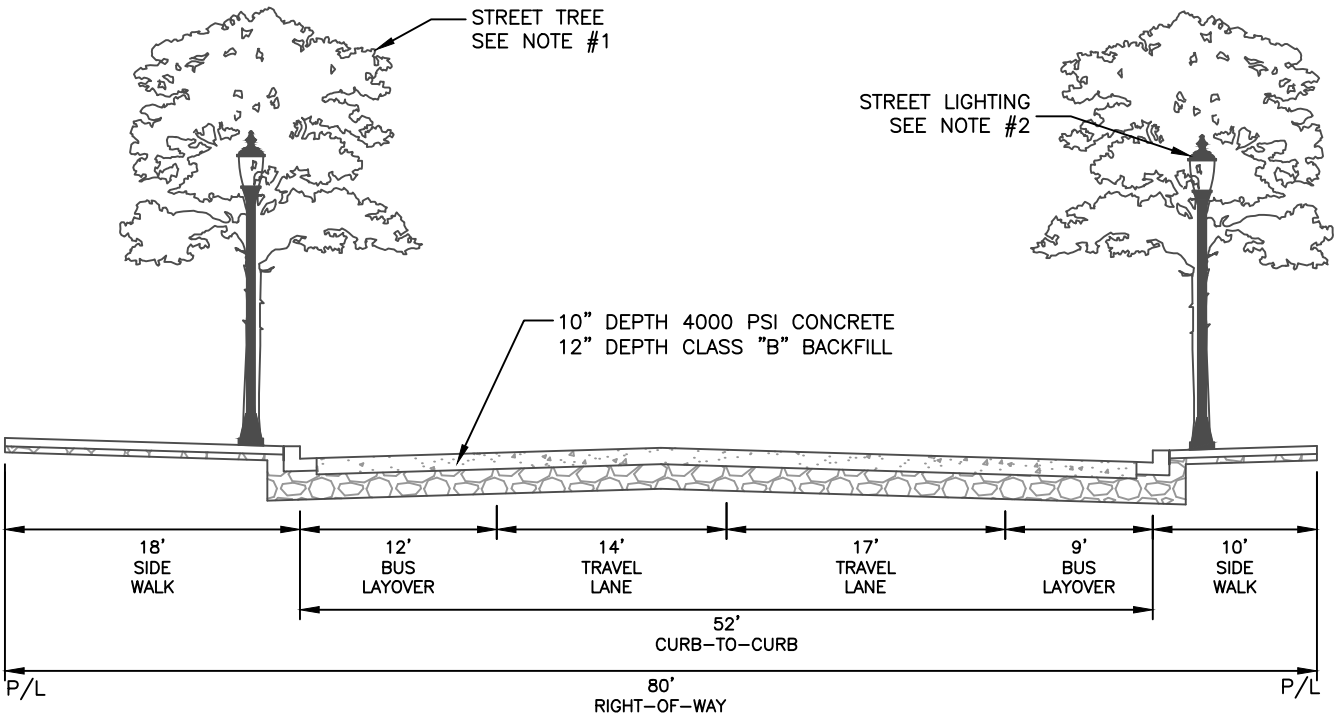

The City is in continual long range planning. These standards represent the best current plans but the City reserves the right to modify the plans.

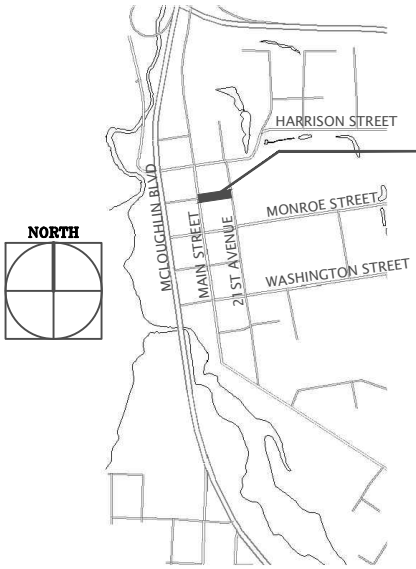

JACKSON STREET

- MAIN STREET TO 21ST AVENUE.
- UNDERGROUND ALL UTILITIES.
- FOR STREET FURNITURE, SEE SECTION 5.0191(E) OF THE MILWAUKIE PUBLIC WORKS STANDARDS.
- FOR BICYCLE FACILITIES, SEE SECTION 5.0191(F) OF THE MILWAUKIE PUBLIC WORKS STANDARDS.

CONSTRUCTION NOTES

1. STREET TREES SHALL BE EITHER GLEDITSIA TRIACANTHOS 'SKYLINE HONEYLOCUST' OR PYRUS CALLERYANA 'CHANTICLEER PEAR' WITH A MINIMUM 2" CALIPER AT TIME OF PLANTING.
2. STREET LIGHTING SHALL BE POWDERCOAT BLACK SINGLE ORNAMENTAL LIGHTS IN ACCORDANCE WITH SECTION 5.0091 OF THE MILWAUKIE PUBLIC WORKS STANDARDS.

MILWAUKIE, OREGON · FOUNDED 1847

CITY OF MILWAUKIE, OREGON – PUBLIC WORKS DEPT.

Jackson Street Cross Section

DRAWING NO. 715B

APPROVED Gary Parkin 12/12
CITY ENGINEER DATE

NO.	REVISIONS	DATE	BY
1	NEW DRAWING	10/09	ZJW
2	CHANGE TO MATCH JACKSON BUS PROJECT	12/11	ZJW

DEC 2012

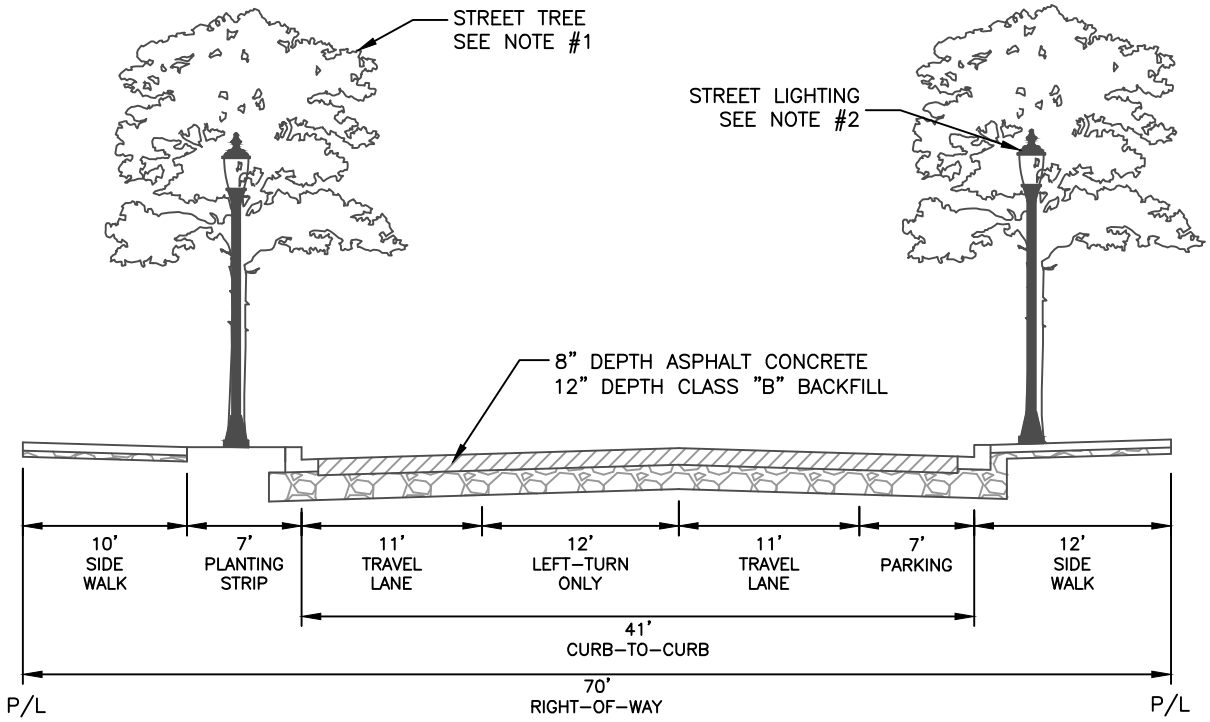

The City is in continual long range planning. These standards represent the best current plans but the City reserves the right to modify the plans.

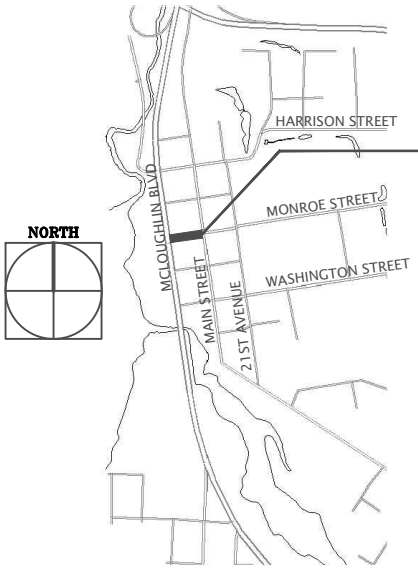

MONROE STREET

- MCLOUGHLIN BOULEVARD TO MAIN STREET.
- UNDERGROUND ALL UTILITIES.
- FOR STREET FURNITURE, SEE SECTION 5.0191(E) OF THE MILWAUKIE PUBLIC WORKS STANDARDS.
- FOR BICYCLE FACILITIES, SEE SECTION 5.0191(F) OF THE MILWAUKIE PUBLIC WORKS STANDARDS.

CONSTRUCTION NOTES

1. STREET TREES SHALL BE EITHER GLEDITSIA TRIACANTHOS 'SKYLINE HONEYLOCUST' OR PYRUS CALLERYANA 'CHANTICLEER PEAR' WITH A MINIMUM 2" CALIPER AT TIME OF PLANTING.
2. STREET LIGHTING SHALL BE POWDERCOAT BLACK SINGLE ORNAMENTAL LIGHTS IN ACCORDANCE WITH SECTION 5.0091 OF THE MILWAUKIE PUBLIC WORKS STANDARDS.

MILWAUKIE, OREGON · FOUNDED 1847

CITY OF MILWAUKIE, OREGON – PUBLIC WORKS DEPT.

Monroe Street Cross Section

DRAWING NO. 716A

APPROVED Gary Parkin 12/12
CITY ENGINEER DATE

NO.	REVISIONS	DATE	BY
1	NEW DRAWING	10/09	ZJW

DEC 2012

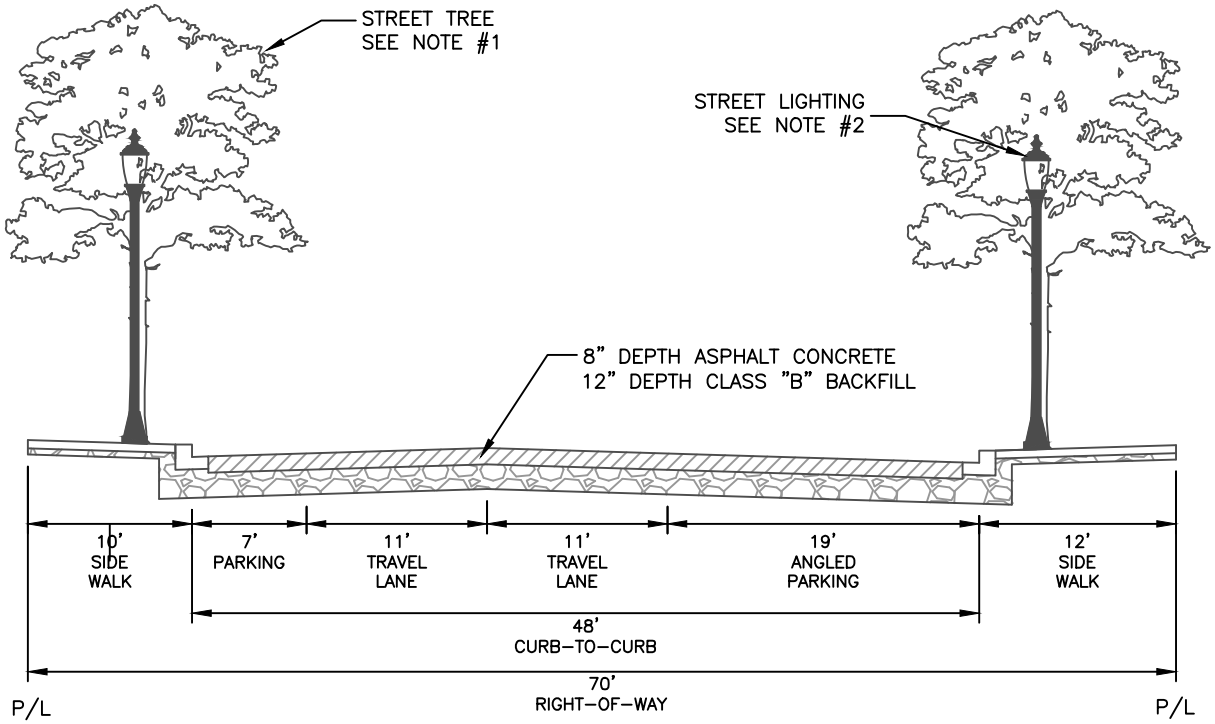

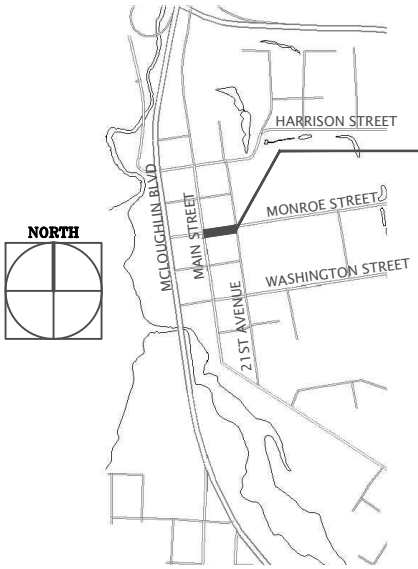

The City is in continual long range planning. These standards represent the best current plans but the City reserves the right to modify the plans.

MONROE STREET

- MAIN STREET TO 21ST AVENUE.
- UNDERGROUND ALL UTILITIES.
- FOR STREET FURNITURE, SEE SECTION 5.0191(E) OF THE MILWAUKIE PUBLIC WORKS STANDARDS.
- FOR BICYCLE FACILITIES, SEE SECTION 5.0191(F) OF THE MILWAUKIE PUBLIC WORKS STANDARDS.

CONSTRUCTION NOTES

1. STREET TREES SHALL BE EITHER GLEDITSIA TRIACANTHOS 'SKYLINE HONEYLOCUST' OR PYRUS CALLERYANA 'CHANTICLEER PEAR' WITH A MINIMUM 2" CALIPER AT TIME OF PLANTING.
2. STREET LIGHTING SHALL BE POWDERCOAT BLACK SINGLE ORNAMENTAL LIGHTS IN ACCORDANCE WITH SECTION 5.0019 OF THE MILWAUKIE PUBLIC WORKS STANDARDS.

MILWAUKIE, OREGON · FOUNDED 1847

CITY OF MILWAUKIE, OREGON – PUBLIC WORKS DEPT.

Monroe Street Cross Section

DRAWING NO. 716B

APPROVED Gary Parkin 12/12
CITY ENGINEER DATE

NO.	REVISIONS	DATE	BY
1	NEW DRAWING	10/09	ZJW

DEC 2012

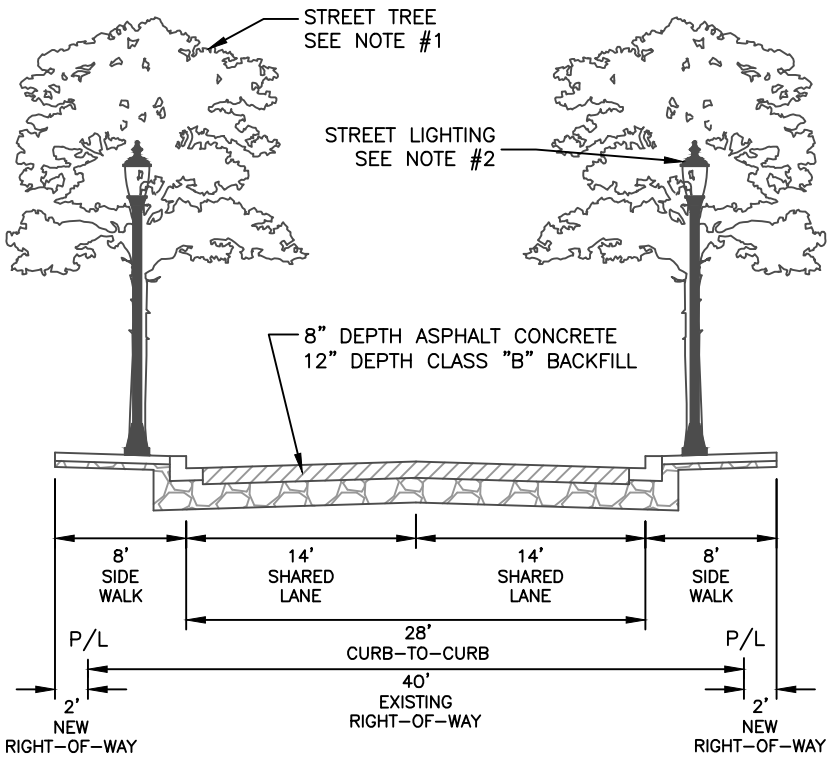

The City is in continual long range planning. These standards represent the best current plans but the City reserves the right to modify the plans.

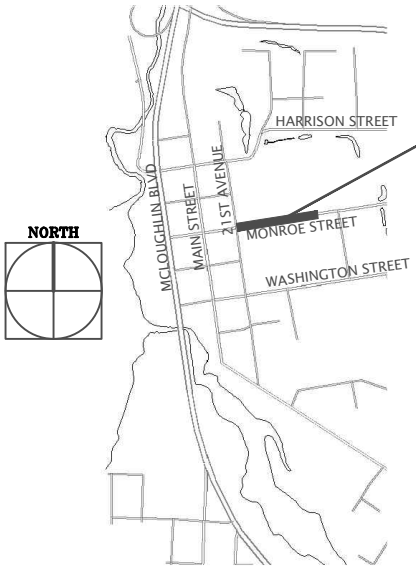

MONROE STREET

- 21ST AVENUE TO WEST SIDE OF RAILROAD TRACKS.
- UNDERGROUND ALL UTILITIES.
- FOR STREET FURNITURE, SEE SECTION 5.0191(E) OF THE MILWAUKIE PUBLIC WORKS STANDARDS.
- FOR BICYCLE FACILITIES, SEE SECTION 5.0191(F) OF THE MILWAUKIE PUBLIC WORKS STANDARDS.
- THE MINIMUM SHARED LANE WIDTH IS 14 FEET. A WIDER STREET AND RIGHT-OF-WAY IS NECESSARY TO ACCOMMODATE ROADWAY MEDIANS.
- BIKE POSITION WITHIN THE SHARED LANE SHALL BE INDICATED WITH SHARED LANE MARKINGS IN ACCORDANCE WITH THE MUTCD.

CONSTRUCTION NOTES

1. STREET TREES SHALL BE EITHER GLEDITSIA TRIACANTHOS 'SKYLINE HONEYLOCUST' OR PYRUS CALLERYANA 'CHANTICLEER PEAR' WITH A MINIMUM 2" CALIPER AT TIME OF PLANTING.
2. STREET LIGHTING SHALL BE POWDERCOAT BLACK SINGLE ORNAMENTAL LIGHTS IN ACCORDANCE WITH SECTION 5.0091 OF THE MILWAUKIE PUBLIC WORKS STANDARDS.

MILWAUKIE, OREGON · FOUNDED 1847

CITY OF MILWAUKIE, OREGON – PUBLIC WORKS DEPT.

Monroe Street Cross Section

DRAWING NO. 716C

APPROVED Gary Parkin 12/12
CITY ENGINEER DATE

NO.	REVISIONS	DATE	BY
1	NEW DRAWING	10/09	ZJW
2	ADDED SHARED TRAVEL LANES	12/11	ZJW

DEC 2012

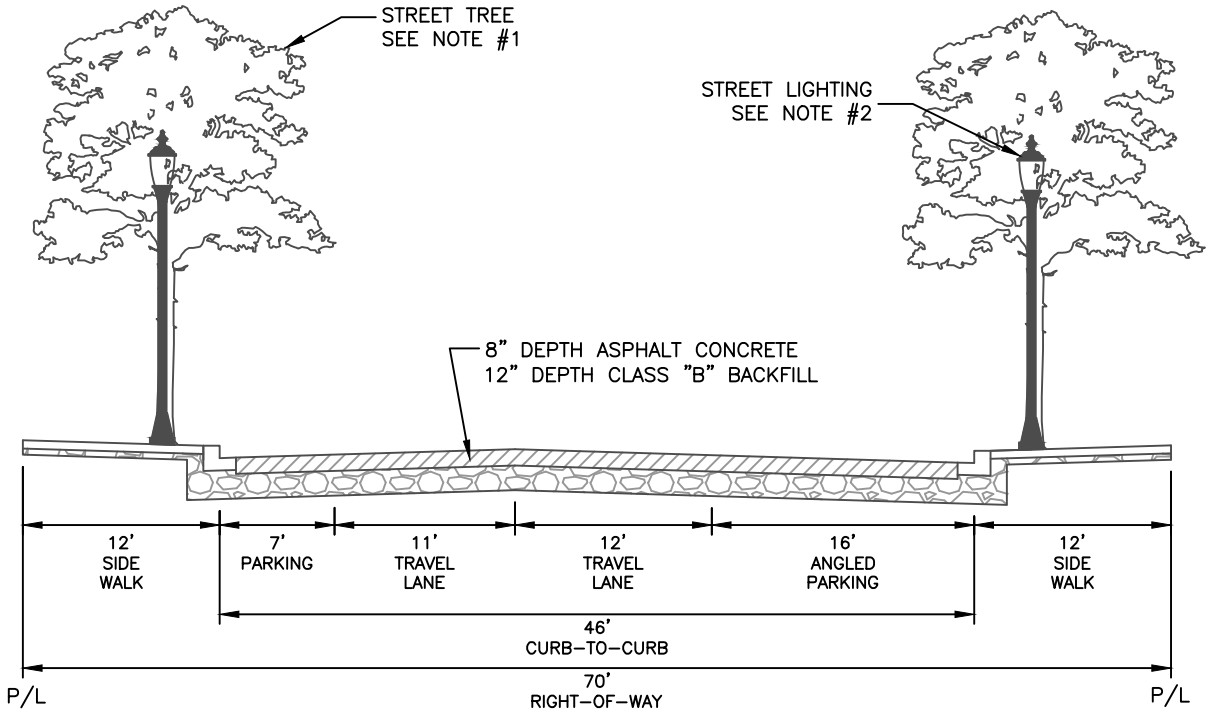

The City is in continual long range planning. These standards represent the best current plans but the City reserves the right to modify the plans.

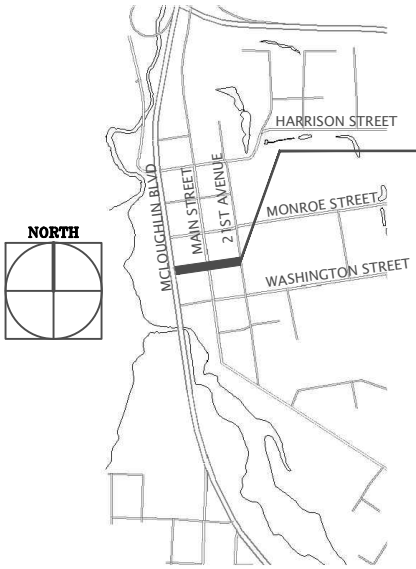

JEFFERSON STREET

- MCLOUGHLIN BOULEVARD TO 21ST AVENUE.
- UNDERGROUND ALL UTILITIES.
- FOR STREET FURNITURE, SEE SECTION 5.0191(E) OF THE MILWAUKIE PUBLIC WORKS STANDARDS.
- FOR BICYCLE FACILITIES, SEE SECTION 5.0191(F) OF THE MILWAUKIE PUBLIC WORKS STANDARDS.

CONSTRUCTION NOTES

1. STREET TREES SHALL BE EITHER GLEDITSIA TRIACANTHOS 'SKYLINE HONEYLOCUST' OR PYRUS CALLERYANA 'CHANTICLEER PEAR' WITH A MINIMUM 2" CALIPER AT TIME OF PLANTING.
2. STREET LIGHTING SHALL BE POWDERCOAT BLACK SINGLE ORNAMENTAL LIGHTS IN ACCORDANCE WITH SECTION 5.0019 OF THE MILWAUKIE PUBLIC WORKS STANDARDS.

MILWAUKIE, OREGON · FOUNDED 1847

CITY OF MILWAUKIE, OREGON – PUBLIC WORKS DEPT.

Jefferson Street Cross Section

DRAWING NO. 717

APPROVED Gary Parkin 12/12

CITY ENGINEER DATE

NO.	REVISIONS	DATE	BY
1	NEW DRAWING	10/09	ZJW
2	CHANGE TO MATCH SOUTH DOWNTOWN PLAN	12/11	ZJW

DEC 2012

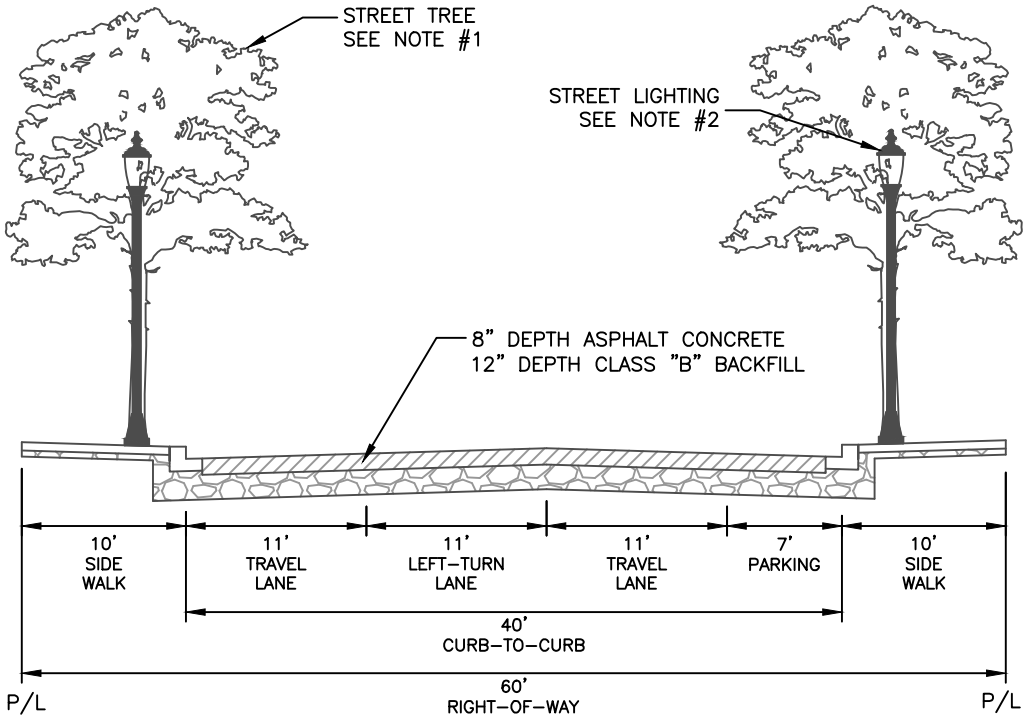

The City is in continual long range planning. These standards represent the best current plans but the City reserves the right to modify the plans.

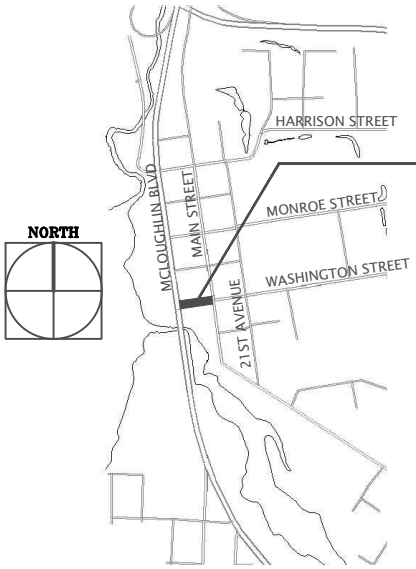

WASHINGTON STREET

- MCLOUGHLIN BOULEVARD TO MAIN STREET.
- UNDERGROUND ALL UTILITIES.
- FOR STREET FURNITURE, SEE SECTION 5.0191(E) OF THE MILWAUKIE PUBLIC WORKS STANDARDS.
- FOR BICYCLE FACILITIES, SEE SECTION 5.0191(F) OF THE MILWAUKIE PUBLIC WORKS STANDARDS.

CONSTRUCTION NOTES

1. STREET TREES SHALL BE EITHER GLEDITSIA TRIACANTHOS 'SKYLINE HONEYLOCUST' OR PYRUS CALLERYANA 'CHANTICLEER PEAR' WITH A MINIMUM 2" CALIPER AT TIME OF PLANTING.
2. STREET LIGHTING SHALL BE POWDERCOAT BLACK SINGLE ORNAMENTAL LIGHTS IN ACCORDANCE WITH SECTION 5.0091 OF THE MILWAUKIE PUBLIC WORKS STANDARDS

MILWAUKIE, OREGON
FOUNDED 1847

CITY OF MILWAUKIE, OREGON – PUBLIC WORKS DEPT.

Washington Street Cross Section

DRAWING NO. 718A

APPROVED Gary Parkin 12/12
CITY ENGINEER DATE

NO.	REVISIONS	DATE	BY
1	NEW DRAWING	10/09	ZJW

DEC 2012

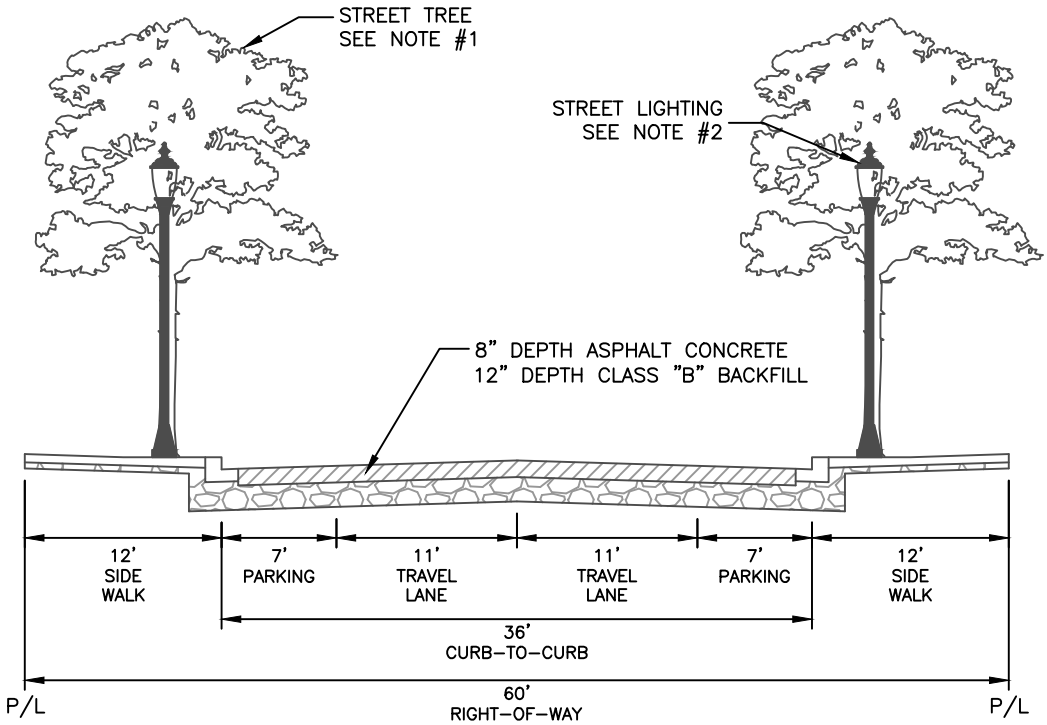

The City is in continual long range planning. These standards represent the best current plans but the City reserves the right to modify the plans.

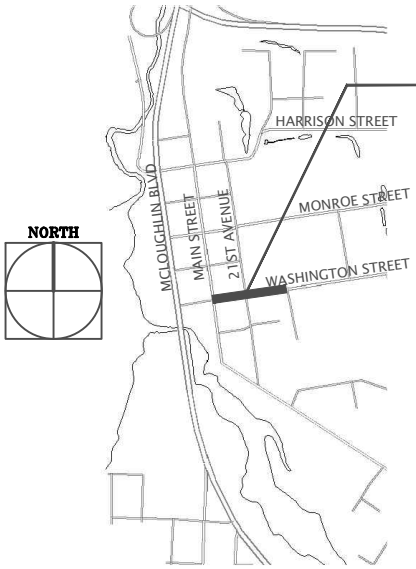

WASHINGTON STREET

- MAIN STREET TO 23RD AVENUE.
- UNDERGROUND ALL UTILITIES.
- FOR STREET FURNITURE, SEE SECTION 5.0191(E) OF THE MILWAUKIE PUBLIC WORKS STANDARDS.
- FOR BICYCLE FACILITIES, SEE SECTION 5.0191(F) OF THE MILWAUKIE PUBLIC WORKS STANDARDS.

CONSTRUCTION NOTES

1. STREET TREES SHALL BE EITHER GLEDITSIA TRIACANTHOS 'SKYLINE HONEYLOCUST' OR PYRUS CALLERYANA 'CHANTICLEER PEAR' WITH A MINIMUM 2" CALIPER AT TIME OF PLANTING.
2. STREET LIGHTING SHALL BE POWDERCOAT BLACK SINGLE ORNAMENTAL LIGHTS IN ACCORDANCE WITH SECTION 5.0091 OF THE MILWAUKIE PUBLIC WORKS STANDARDS.

MILWAUKIE, OREGON · FOUNDED 1847

CITY OF MILWAUKIE, OREGON – PUBLIC WORKS DEPT.

Washington Street Cross Section

DRAWING NO. 718B

APPROVED Gary Parkin 12/12
CITY ENGINEER DATE

NO.	REVISIONS	DATE	BY
1	NEW DRAWING	03/10	JLR
2	CHANGE TO MATCH SOUTH DOWNTOWN PLAN	12/11	ZJW

DEC 2012

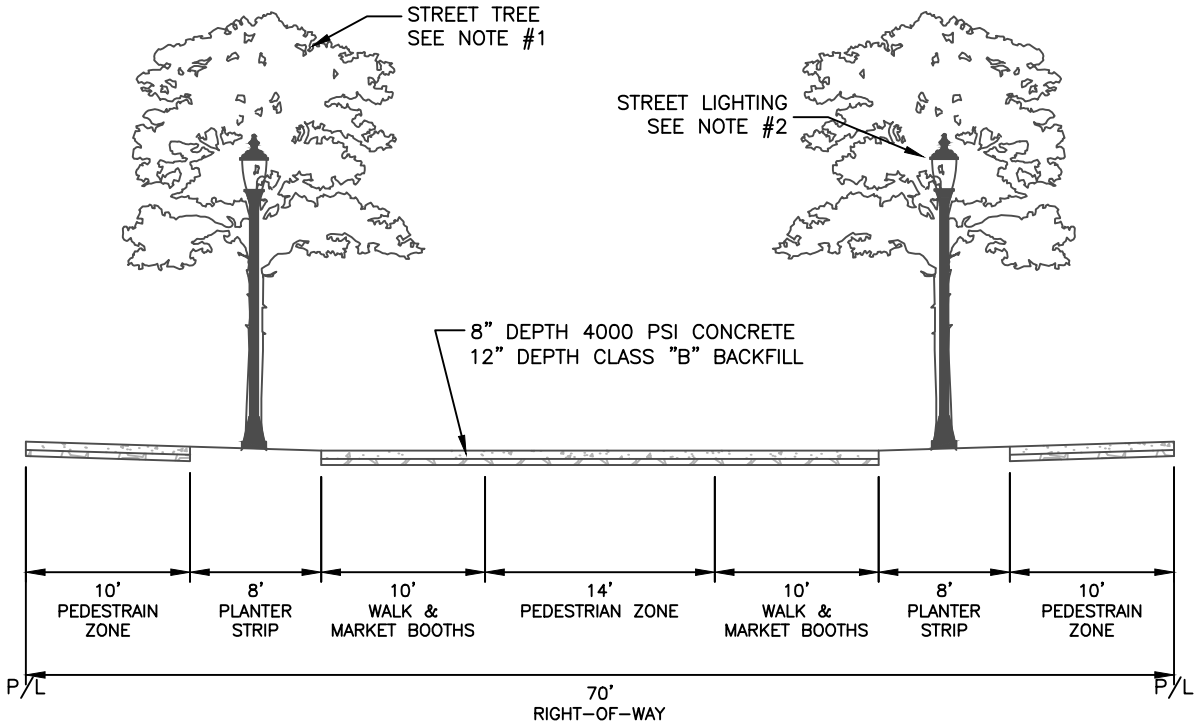

The City is in continual long range planning. These standards represent the best current plans but the City reserves the right to modify the plans.

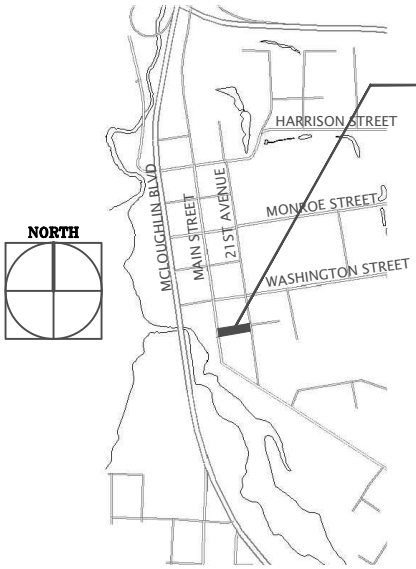

ADAMS STREET

- MAIN STREET TO 21ST AVENUE.
- UNDERGROUND ALL UTILITIES.
- FOR STREET FURNITURE, SEE SECTION 5.0191(E) OF THE MILWAUKIE PUBLIC WORKS STANDARDS.
- FOR BICYCLE FACILITIES, SEE SECTION 5.0191(F) OF THE MILWAUKIE PUBLIC WORKS STANDARDS.

CONSTRUCTION NOTES

1. STREET TREES SHALL BE ULMUS JAPONICA x WILSONIANA MORTON 'ACCOLADE ELM' WITH A MINIMUM 2" CALIPER AT TIME OF PLANTING.
2. STREET LIGHTING SHALL BE POWDERCOAT BLACK SINGLE ORNAMENTAL LIGHTS IN ACCODANCE WITH SECTION 5.0091 OF THE MILWAUKIE PUBLIC WORKS STANDARDS.

CITY OF MILWAUKIE, OREGON – PUBLIC WORKS DEPT.

Adams Street Cross Section

DRAWING NO. 719A

APPROVED Gary Parkin 12/12
CITY ENGINEER DATE

NO.	REVISIONS	DATE	BY
1	NEW DRAWING	03/10	JLR

DEC 2012

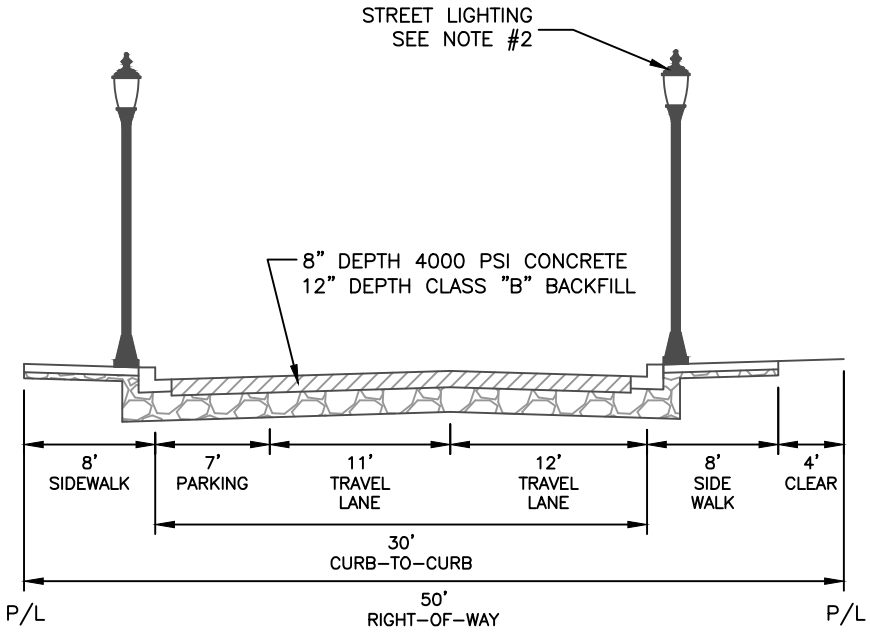

The City is in continual long range planning. These standards represent the best current plans but the City reserves the right to modify the plans.

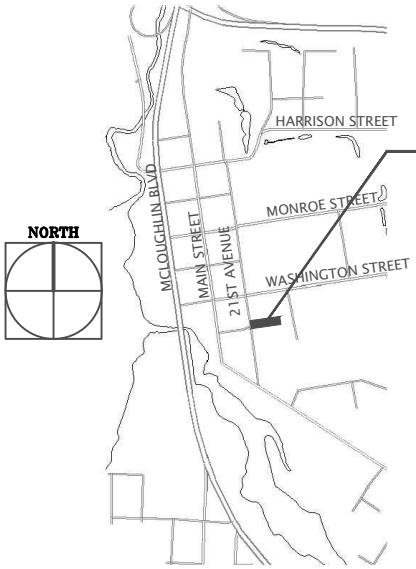

ADAMS STREET

- EAST OF 21ST AVENUE.
- UNDERGROUND ALL UTILITIES.
- FOR STREET FURNITURE, SEE SECTION 5.0191(E) OF THE MILWAUKIE PUBLIC WORKS STANDARDS.
- FOR BICYCLE FACILITIES, SEE SECTION 5.0191(F) OF THE MILWAUKIE PUBLIC WORKS STANDARDS.

CONSTRUCTION NOTES

1. STREET LIGHTING SHALL BE POWDERCOAT BLACK SINGLE ORNAMENTAL LIGHTS IN ACCORDANCE WITH SECTION 5.0091 OF THE MILWAUKIE PUBLIC WORKS STANDARDS.

CITY OF MILWAUKIE, OREGON – PUBLIC WORKS DEPT.

Adams Street Cross Section

DRAWING NO. 719B

APPROVED Gary Parkin 12/12

CITY ENGINEER DATE

NO.	REVISIONS	DATE	BY
1	NEW DRAWING	10/09	ZJW

DEC 2012